**MOTOROLA**
*Communications*
*Sector*

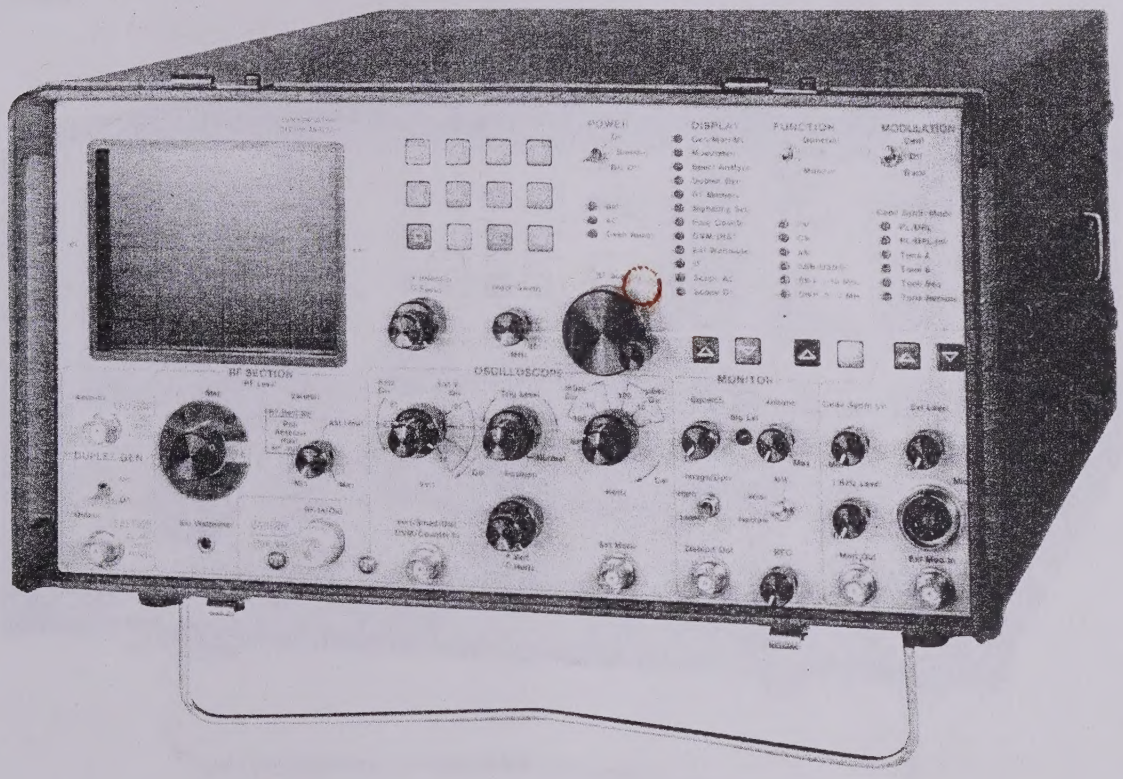

# COMMUNICATIONS SYSTEM ANALYZER R-2001D

## Maintenance Manual

A-2

*Motorola Test Equipment Products*

Motorola, Inc. 1985
All Rights Reserved
Printed in U.S.A.

1313 E. Algonquin Rd.
Schaumburg, IL 60196

**RLN4073A**
4/30/89

**MOTOROLA**
*Communications*
*Sector*

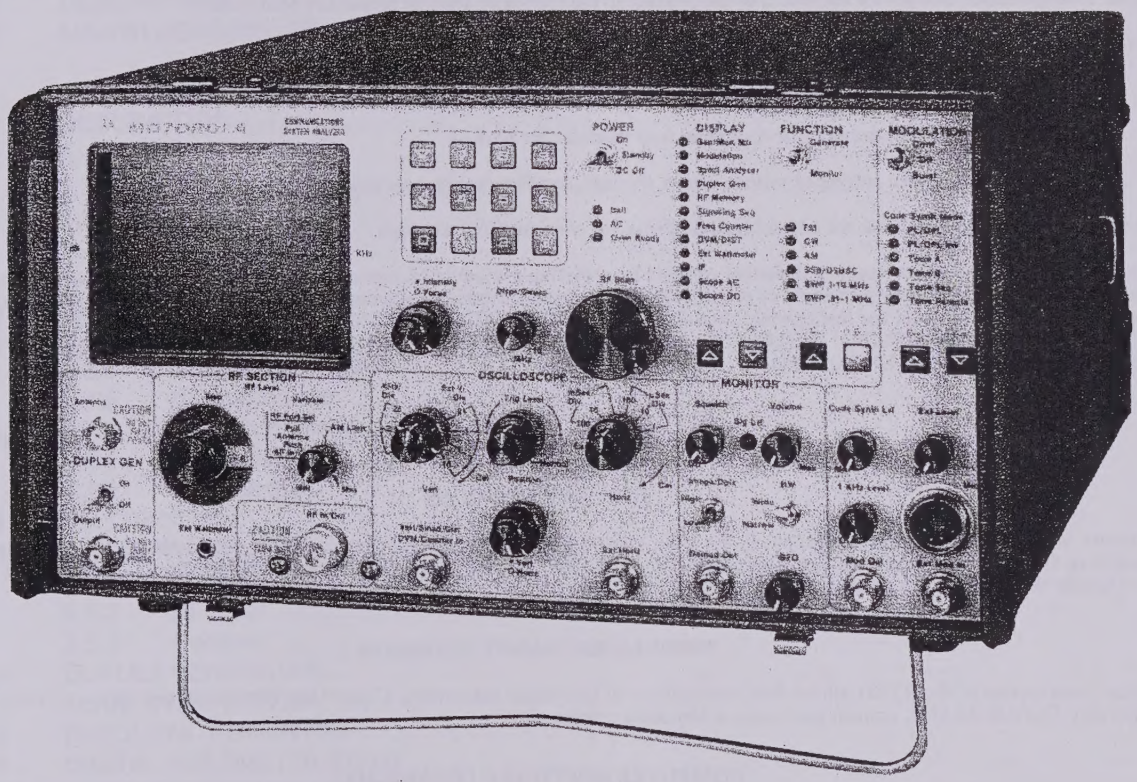


# COMMUNICATIONS SYSTEM ANALYZER R-2001D

## Maintenance Manual

*Motorola Test Equipment Products*

Motorola, Inc. 1985
All Rights Reserved
Printed in U.S.A.

1313 E. Algonquin Rd.
Schaumburg, IL 60196

68P81069A63-A
8/24/87

## MOTOROLA TEST-EQUIPMENT PRODUCTS
## LIMITED WARRANTY
## (EXCLUDES EXPORT SHIPMENTS)

Motorola Test-Equipment Products (herein the "product") that are manufactured or distributed by Motorola Communications Group Par Department are warranted by Motorola for a period of one (1) year from date of shipment against defects in material and workmanship.

This express warranty is extended to the original purchaser only. In the event of a defect, malfunction, or failure during the period of warranty, Motorola, at its option, will either repair or replace the product, providing that Motorola receives written notice specifying the nature of the defect during the period of warranty, and the defective product is returned to Motorola at 1313 East Algonquin Road, Schaumburg, IL 60196, transportation prepaid. Proof of purchase and evidence of date of shipment (packing list or invoice) must accompany the return of the defective product. Transportation charges for the return of the product to the Purchaser shall be prepaid by Motorola.

This warranty is void, as determined in the reasonable judgment of Motorola, if:

(a) The product has not been operated in accordance with the procedures described in the operating instructions;

(b) The seals on non-user-serviceable components or modules are broken;

(c) The product has been subject to misuse, abuse, damage, accident, negligence, repair or alteration.

In no event shall Motorola be liable for any special, incidental, or consequential damages.

In the event Motorola elects to repair a defective product by replacing a module or subassembly, Motorola, at its option, may replace such defective module or subassembly with a new or reconditioned replacement module or subassembly. Only the unexpired warranty of the warranty product will remain in force on the replacement module or subassembly. EXCEPT AS SPECIFICALLY SET FORTH HEREIN, ALL WARRANTIES EXPRESS OR IMPLIED, INCLUDING ANY IMPLIED WARRANTY OF FITNESS FOR A PARTICULAR PURPOSE OR MERCHANT ABILITY, ARE EXCLUDED.

EPS-30828-O

## SUPPORT SERVICES

For service on your Motorola test equipment in the U.S., contact the Test-Equipment Service Center, Schaumburg, 1313 E. Algonquin Rd., Schaumburg, Illinois 60196 or call the Test-Equipment Service Hotline: 800/323-6967 during normal business hours. In Illinois call 1-312-576-7025. Outside the U.S., contact your nearest Motorola representative.

## MODULE EXCHANGE PROGRAM

Modular construction of the R2001 allows field replacement of individual assemblies. Contact the Test-Equipment Service Center for pricing and delivery. Outside the U.S., contact your nearest Motorola representative.

## COMPUTER SOFTWARE COPYRIGHTS

The Motorola products described in this instruction manual may include copyrighted Motorola computer programs stored in semiconductor memories or other mediums. Laws in the United States and other countries preserve for Motorola certain exclusive rights for copyrighted computer programs, including the exclusive right to copy or reproduce in any form the copyrighted computer program. Accordingly, any copyrighted Motorola computer programs contained in the Motorola products described in this instruction manual may not be copied or reproduced in any manner without the express written permission of Motorola. Furthermore, the purchase of Motorola products shall not be deemed to grant either directly or by implication, estoppel, or otherwise, any license under the copyrights, patents or patent applications of Motorola, except for the normal non-exclusive, royalty-free license to use that arises by operation of law in the sale of a product.

ESP-34440-A

Specifications subject to change without notice
, Motorola, Private-Line, and Digital Private-Line are trademarks of Motorola, Inc.
Printed in U.S.A. 1985 Motorola Inc.

# TABLE OF CONTENTS


Paragraph Page

**FOREWORD**

**SECTION 1. INTRODUCTION**

1.1 DESCRIPTION . . . . . 1-1
1.2 MAJOR ASSEMBLIES . . . . . 1-8

**SECTION 2. SYSTEM THEORY OF OPERATION**

2.1 DESCRIPTION . . . . . 2-1
2.2 SYSTEM CONTROL . . . . . 2-1
2.2.1 Processor . . . . . 2-1
2.2.2 Processor Bus . . . . . 2-1
2.2.3 Control Busses . . . . . 2-1
2.2.4 IEEE Bus . . . . . 2-3
2.3 GENERATE MODE . . . . . 2-3
2.3.1 General . . . . . 2-3
2.3.2 Frequency Standard . . . . . 2-4
2.3.3 RF Synthesizer . . . . . 2-4
2.3.4 Wideband Amplifier . . . . . 2-4
2.3.5 Step Attenuator . . . . . 2-4
2.3.6 Input/Output . . . . . 2-4
2.4 WATTMETER . . . . . 2-4
2.5 MONITOR MODE . . . . . 2-5
2.5.1 General . . . . . 2-5
2.5.2 RF Input . . . . . 2-5
2.5.3 Receiver . . . . . 2-5
2.6 DUPLEX GENERATOR . . . . . 2-6
2.7 CODE SYNTHESIZER . . . . . 2-6
2.8 FREQUENCY COUNTER . . . . . 2-7
2.9 DIGITAL VOLTMETER (DVM) . . . . . 2-7
2.10 DISTORTION/SINAD METER . . . . . 2-8
2.11 OSCILLOSCOPE . . . . . 2-8

**SECTION 3. ALIGNMENT PROCEDURE**

3.1 INTRODUCTION . . . . . 3-1
3.1.1 Test Equipment Required . . . . . 3-1
3.1.2 Preparation for Alignment . . . . . 3-1
3.2 BASIC ALIGNMENT PROCEDURE . . . . . 3-1
3.2.1 Low Voltage Supply . . . . . 3-1
3.2.2 CRT Intensity Bias . . . . . 3-1
3.2.3 CRT Intensity Balance . . . . . 3-1
3.2.4 CRT Astigmatism and Geometry . . . . . 3-1
3.2.5 CRT Vertical Centering and Trace Rotation . . . . . 3-2
3.2.6 CRT Horizontal Centering . . . . . 3-2
3.2.7 CRT Horizontal Gain . . . . . 3-2
3.2.8 CRT Vertical Gain . . . . . 3-3
3.2.9 Vertical Input Gain . . . . . 3-3
3.2.10 DVM Zero . . . . . 3-3
3.2.11 Character Generator . . . . . 3-4
3.2.12 Spectrum Analyzer Centering . . . . . 3-4
3.2.13 Horizontal Timebase . . . . . 3-5

## TABLE OF CONTENTS (Cont)


| Paragraph | | | Page |
|---|---|---|---|
| 3.3 | EXTENDED ALIGNMENT PROCEDURE | | 3- |
| | 3.3.1 | DVM | 3-5 |
| | 3.3.2 | Distortion/SINAD Alignment | 3-6 |
| | 3.3.3 | Receiver | 3-6 |
| | 3.3.4 | RF Synthesizer | 3-7 |
| | 3.3.5 | Frequency Standard | 3-7 |
| | 3.3.6 | Duplex Generator | 3-7 |
| | 3.3.7 | Wideband Amplifier | 3-7 |
| | 3.3.8 | Wattmeter | 3-7 |
| | 3.3.9 | Scope Compensation | 3-7 |
| | 3.3.10 | Cathode Voltage | 3-7 |

**SECTION 4. SYSTEM CHECKOUT AND TROUBLESHOOTING**

| | | |
|---|---|---|
| 4.1 | INTRODUCTION | 4-1 |
| 4.2 | SAFE HANDLING OF CMOS INTEGRATED-CIRCUITS DEVICES | 4-1 |
| 4.3 | CHECKOUT AND TROUBLESHOOTING PROCEDURES | 4-2 |

**SECTION 5. SYSTEM WIRELIST AND PARTS LIST — SYSTEM MOTHERBOARD (A19)**
(See **LIST OF TABLES**)

**SECTION 6. HIGH-VOLTAGE POWER SUPPLY (A1)**

| | | | |
|---|---|---|---|
| 6.1 | DESCRIPTION | | 6-1 |
| 6.2 | THEORY OF OPERATION | | 6-1 |
| | 6.2.1 | Voltage Regulation Circuit | 6-1 |
| | 6.2.2 | Multipliers | 6-1 |
| | 6.2.3 | Intensity Modulator | 6- |
| | 6.2.4 | Focus Modulator | 6-1 |
| | 6.2.5 | Transient Protector (A1A2) | 6-1 |

**SECTION 7. SCOPE AMPLIFIER BOARD (A2)**

| | | | |
|---|---|---|---|
| 7.1 | DESCRIPTION | | 7-1 |
| 7.2 | THEORY OF OPERATION | | 7-1 |
| | 7.2.1 | Deflection Amplifiers | 7-1 |
| | 7.2.2 | Horizontal Timebase Generator | 7-1 |
| | 7.2.3 | Horizontal Switching | 7-1 |
| | 7.2.4 | Z-Axis Modulator | 7-1 |
| | 7.2.5 | Intensity Control | 7-2 |
| | 7.2.6 | Focus Control | 7-2 |
| | 7.2.7 | Astigmatism, Geometry, and Trace Rotation | 7-2 |

**SECTION 8. LOW-VOLTAGE POWER SUPPLY (A3-A6)**

| | | | |
|---|---|---|---|
| 8.1 | DESCRIPTION | | 8-1 |
| 8.2 | THEORY OF OPERATION | | 8-1 |
| | 8.2.1 | Battery Charger Board (A3) | 8-1 |
| | 8.2.2 | Control Board (A4) | 8-1 |
| | 8.2.3 | Output Board (A5) | 8-3 |
| | 8.2.4 | Switcher Board (A6) | 8-4 |
| | 8.2.5 | Rear Panel | 8-4 |

## TABLE OF CONTENTS (Cont)


Paragraph Page

**SECTION 9. SCOPE/DVM CONTROL BOARD (A7)**

9.1 DESCRIPTION . . . . . 9-1
9.2 THEORY OF OPERATION . . . . . 9-1
9.2.1 Scope Vertical Control . . . . . 9-1
9.2.2 Dual-Display Control . . . . . 9-1
9.2.3 Scope Horizontal Control . . . . . 9-1
9.2.4 Synthesizer Sweep Control . . . . . 9-2
9.2.5 Scope Z-Axis Control . . . . . 9-2
9.2.6 Modulation-Display Control . . . . . 9-2
9.2.7 Peak Detector . . . . . 9-2
9.2.8 DVM Control . . . . . 9-2
9.2.9 External DVM/Distortion Control . . . . . 9-3
9.2.10 Distortion Measurement . . . . . 9-3
9.2.11 External DVM Measurement . . . . . 9-3
9.2.12 Audio Amplifier and Alarm Generator . . . . . 9-3
9.2.13 Board Control . . . . . 9-3

**SECTION 10. RECEIVER BOARD (A8)**

10.1 DESCRIPTION . . . . . 10-1
10.2 THEORY OF OPERATION . . . . . 10-1
10.2.1 Linear IF Section . . . . . 10-1
10.2.2 Logarithmic Amplifier . . . . . 10-2
10.2.3 FM/SSB/WB Signal-Present Detectors . . . . . 10-3
10.2.4 Baseband Audio-Processing Circuits . . . . . 10-4
10.2.5 Digital Control and Power Conditioning . . . . . 10-4

**SECTION 11. RF SYNTHESIZER MODULE (A9)**

11.1 DESCRIPTION . . . . . 11-1
11.2 THEORY OF OPERATION . . . . . 11-1
11.2.1 Reference and Control Board (A9A1) . . . . . 11-1
11.2.2 310 to 440-MHz Loop Board (A9A2) . . . . . 11-2
11.2.3 Output Board (A9A3) . . . . . 11-2
11.2.4 60.5-MHz Loop Board (A9A4) . . . . . 11-3
11.2.5 GHz Loop Board (A9A5) . . . . . 11-3
11.2.6 640-MHz Loop Board (A9A6) . . . . . 11-4
11.3 SYNTHESIZER MOTHERBOARD (A9A7) . . . . . 11-5

**SECTION 12. AUDIO SYNTHESIZER BOARD (A10)**

12.1 DESCRIPTION . . . . . 12-1
12.2 THEORY OF OPERATION . . . . . 12-1
12.2.1 Audio Synthesizer . . . . . 12-1
12.2.2 DPL Generator . . . . . 12-1
12.2.3 1-kHz Tone . . . . . 12-2
12.2.4 Internal Modulation . . . . . 12-2
12.2.5 External Modulation . . . . . 12-2
12.2.6 Modulation Control . . . . . 12-2
12.2.7 Board Control . . . . . 12-2

## TABLE OF CONTENTS (Cont)


Paragraph — Page

**SECTION 13. PROCESSOR INTERFACE BOARD (A11)**

13.1 DESCRIPTION . . . 13-1
13.2 THEORY OF OPERATION . . . 13-1
13.2.1 System Control-Bus Interface . . . 13-1
13.2.2 Digital Voltmeter (DVM) . . . 13-1
13.2.3 Frequency Counter . . . 13-2
13.2.4 Board Control . . . 13-3

**SECTION 14. PROCESSOR BOARD (A14)**

**PART 1. 01-P22140E001**

14.1 DESCRIPTION . . . 14-1
14.2 THEORY OF OPERATION . . . 14-1
14.2.1 Microprocessor . . . 14-1
14.2.2 Memory . . . 14-1
14.2.3 Input/Output . . . 14-2
14.2.4 Character Display . . . 14-2

**PART 2. 01-P29050H001**

14.3 DESCRIPTION . . . 14-3
14.4 THEORY OF OPERATION . . . 14-3
14.4.1 Microprocessor . . . 14-3
14.4.2 Memory . . . 14-3
14.4.3 Input/Output . . . 14-3
14.4.4 Character Display . . . 14-4
14.4.5 DTMF Encode/Decode . . . 14-4
14.4.6 Printer Port . . . 14-4

**SECTION 15. FRONT-PANEL INTERFACE BOARD (A15)**

15.1 DESCRIPTION . . . 15-1
15.2 THEORY OF OPERATION . . . 15-1
15.2.1 Processor-Control Interface . . . 15-1
15.2.2 Analog Interface . . . 15-5

**SECTION 16. FREQUENCY-STANDARD INTERFACE BOARD (A16)**

16.1 DESCRIPTION . . . 16-1
16.2 THEORY OF OPERATION . . . 16-1
16.2.1 Internal Source . . . 16-1
16.2.2 External Source . . . 16-1

**SECTION 17. RF INPUT MODULE (A17)**

17.1 DESCRIPTION . . . 17-1
17.2 THEORY OF OPERATION . . . 17-1
17.2.1 Wattmeter Board (A17A1) . . . 17-1
17.2.2 Wideband Amplifier Board (A17A2) . . . 17-2
17.2.3 Duplex Generator Board (A17A3) . . . 17-3

**SECTION 18. FRONT PANEL ASSEMBLY (A18)**

18.1 DESCRIPTION . . . 18-1
18.2 CONTROLS, SWITCHES AND LEDs . . . 18-1
18.3 DECODING FOR DISPLAY, FUNCTION AND MODULATION LEDs . . . 18-4

## TABLE OF CONTENTS (Cont)

Paragraph Page

### SECTION 19. BATTERY ASSEMBLY


19.1 DESCRIPTION . . . . . 19-1
19.2 INSTALLATION . . . . . 19-1
19.3 OPERATION . . . . . 19-2


### SECTION 20. CELLULAR TELEPHONE TEST OPTION


20.1 DESCRIPTION . . . . . 20-1
20.2 THEORY OF OPERATION . . . . . 20-1
20.2.1 Transmitted Data . . . . . 20-1
20.2.2 Received Data . . . . . 20-1
20.2.3 Control . . . . . 20-1
20.2.4 Modulation . . . . . 20-1
20.2.5 10-KHz Detection . . . . . 20-1
20.2.6 Manual-Mode Control . . . . . 20-1
20.2.7 Printer . . . . . 20-2


### SECTION 21. IEEE/REMOTE INTERFACE OPTION

#### PART 1. IEEE INTERFACE


21.1 DESCRIPTION . . . . . 21-1
21.2 THEORY OF OPERATION . . . . . 21-1
21.2.1 IEEE Bus Interface . . . . . 21-1
21.2.2 RF-Level Control . . . . . 21-1
21.2.3 Modulation Control . . . . . 21-1
21.2.4 Address-Decode and Control-Latch Circuitry . . . . . 21-1
21.2.5 Multipurpose Input/Output and Relay Ports . . . . . 21-1


#### PART 2. REMOTE INTERFACE


21.3 DESCRIPTION . . . . . 21-2
21.4 THEORY OF OPERATION . . . . . 21-2
21.4.1 IEEE Bus Interface . . . . . 21-2
21.4.2 RS-232 Bus Interface . . . . . 21-2
21.4.3 RF-Level Control . . . . . 21-2
21.4.4 Modulation Control . . . . . 21-2
21.4.5 Address-Decode and Control-Latch Circuitry . . . . . 21-2
21.4.6 Multipurpose Input/Output and Relay Ports . . . . . 21-2


### SECTION 22. SECURE COM OPTION


22.1 DESCRIPTION . . . . . 22-1
22.2 THEORY OF OPERATION . . . . . 22-1
22.2.1 Transmit . . . . . 22-1
22.2.2 Receive . . . . . 22-1
22.3 ENCODER SECTION . . . . . 22-1
22.3.1 Inputs . . . . . 22-1
22.3.2 Encryption Type . . . . . 22-1
22.3.3 Encoder Outputs . . . . . 22-1
22.4 DECODER SECTION . . . . . 22-2
22.4.1 Inputs . . . . . 22-2
22.4.2 Decryption Types . . . . . 22-2
22.4.3 Outputs . . . . . 22-2
22.5 PROGRAMMER SECTION . . . . . 22-2

## TABLE OF CONTENTS (Cont)

Paragraph Page

### SECTION 22. SECURE COM OPTION (Cont)


22.6 MEASUREMENTS . . . . . 22-2
22.6.1 Bit Error Rate Test . . . . . 22-2
22.6.2 Deviation Measurement . . . . . 22-2
22.6.3 Line Level Measurement . . . . . 22-3
22.6.4 Oscilloscope Displays . . . . . 22-3
22.7 FEATURES . . . . . 22-3
22.7.1 End of Message (EOM Signaline Test) . . . . . 22-3
22.7.2 Self Testing . . . . . 22-3
22.7.3 Dual Code Operation . . . . . 22-3
22.7.4 Plain Text Output . . . . . 22-4
22.7.5 Printer Interface . . . . . 22-4


### SECTION 23. TRUNKED RADIO TEST


23.1 DESCRIPTION . . . . . 23-1
23.2 THEORY OF OPERATION . . . . . 23-1
23.2.1 Transmitted Data . . . . . 23-1
22.2.2 Received Data . . . . . 23-1
23.2.3 Data Detect Circuit . . . . . 23-1
23.2.4 Modulation . . . . . 23-1
23.2.5 Synthesizer . . . . . 23-1

# LIST OF ILLUSTRATIONS


Figure — Page

**FOREWORD**

1 Repair Request Form . . . . . xiii

**SECTION 1. INTRODUCTION**

1-1 Two-Tone (A/B) Sequence Timing . . . . . 1-5
1-2 5/6 Tone Sequence Timing . . . . . 1-6
1-3 MTS Sequence Timing . . . . . 1-6
1-4 2805 Sequence Timing . . . . . 1-6
1-5 Communications System Analyzer — Top View, Cover Removed. . . . . 1-9
1-6 Communications System Analyzer — Bottom View, Cover Removed . . . . . 1-9

**SECTION 2. SYSTEM THEORY OF OPERATION**

2-1 Communications System Analyzer — Block Diagram . . . . . 2-11
2-2 Communications System Analyzer — Bus Structure . . . . . 2-12
2-3 Generate Mode — Block Diagram . . . . . 2-13
2-4 Wattmeter — Block Diagram. . . . . 2-14
2-5 Monitor Mode — Block Diagram . . . . . 2-15
2-6 Duplex Generator — Block Diagram. . . . . 2-16
2-7 Code Synthesizer — Block Diagram. . . . . 2-16
2-8 Frequency Counter — Block Diagram. . . . . 2-17
2-9 DVM/Distortion Analyzer — Block Diagram . . . . . 2-18
2-10 Oscilloscope — Block Diagram . . . . . 2-19

**SECTION 3. ALIGNMENT PROCEDURE**

3-1 Control Board (A4) — Alignment Points . . . . . 3-2
3-2 Scope Amplifier Board (A2) — Alignment Points . . . . . 3-3
3-3 Front Panel Interface Board (A15) — Alignment Points. . . . . 3-4
3-4 Scope/DVM Control Board (A7) — Alignment Points . . . . . 3-5
3-5 Processor Interface Board (A11) — Alignment Points . . . . . 3-7
3-6 Receiver Board (A8) — Alignment Points . . . . . 3-12
3-7 60.5 MHz Loop Board (A9A4) — Alignment Points . . . . . 3-13
3-8 GHz Loop Board — Alignment Points. . . . . 3-14
3-9 Frequency Standard Interface Board — Alignment Points . . . . . 3-15
3-10 Duplex Generator Board (A17A3) — Alignment Points. . . . . 3-16
3-11 Wideband Amplifier Board — Alignment Points . . . . . 3-17
3-12 Wattmeter Board — Alignment Points . . . . . 3-18
3-13 Scope Compensation . . . . . 3-19
3-14 High Voltage Power Supply Board — Alignment Poitns . . . . . 3-20

**SECTION 5. SYSTEM WIRELIST AND PARTS LIST — SYSTEM MOTHERBOARD (A19)**

5-1 a,b System Motherboard (A19) — Printed Wiring Board Assembly and Parts List . . . . . 5-95
5-2 a,b Chassis-Assembly and Parts List . . . . . 5-97
5-3 Subsystem — Assembly and Parts List . . . . . 5-98
5-4 CRT-Assembly and Parts List . . . . . 5-99
5-5 Front Cover-Assembly and Parts List . . . . . 5-100

**SECTION 6. HIGH-VOLTAGE POWER SUPPLY (A1)**

6-1 Block Diagram . . . . . 6-3
6-2 Schematic . . . . . 6-4
6-3 Printed Wiring Board Assembly and Parts List. . . . . 6-5
6-4 Assembly and Parts List . . . . . 6-6
6-5 Transient Protector (A1A2) — Assembly and Parts List . . . . . 6-7

## LIST OF ILLUSTRATIONS (Cont)


Figure — Page

### SECTION 7. SCOPE AMPLIFIER BOARD (A2)

7-1 Block Diagram . . . 7-3
7-2 a,b Schematic (Sheets 1 and 2) . . . 7-4
7-3 Printed Wiring Board Assembly and Parts List . . . 7-7

### SECTION 8. LOW-VOLTAGE POWER SUPPLY (A3-A6)

8-1 Block Diagram . . . 8-5
8-2 Battery Charger Board (A3) — Schematic . . . 8-6
8-3 Battery Charger Board (A3) — Printed Wiring Board Assembly and Parts List . . . 8-7
8-4 Battery Charger Board (A3) — Assembly and Parts List . . . 8-8
8-5 Control Board (A4) — Block Diagram . . . 8-9
8-6 Control Board (A4) — Schematic . . . 8-10
8-7 Control Board (A4) — Printed Wiring Board Assembly and Parts List . . . 8-11
8-8 Output Board (A5) — Schematic . . . 8-13
8-9 a,b Output Board (A5) — Printed Wiring Board Assembly and Parts List (Sheets 1 and 2) . . . 8-15
8-10 Switcher Board (A6) — Schematic . . . 8-17
8-11 Switcher Board (A6) — Printed Wiring Board Assembly and Parts List . . . 8-19
8-12 Switcher Board (A6) — Assembly and Parts List . . . 8-20

### SECTION 9. SCOPE/DVM CONTROL BOARD (A7)

9-1 a,b Block Diagram (Sheets 1 and 2) . . . 9-5
9-2 a-d Schematic (Sheets 1 thru 4) . . . 9-7
9-3 Printed Wiring Board Assembly and Parts List . . . 9-11

### SECTION 10. RECEIVER BOARD (A8)

10-1 a Receiver Board (A8) — Block Diagram . . . 10-7
10-1 b Linear IF Amplifier — Block Diagram . . . 10-8
10-1 c Logarithmic Amplifier — Block Diagram . . . 10-9
10-1 d FM/SSB/WB Signal-Present Detectors — Block Diagram . . . 10-9
10-1 e Baseband Audio-Processing Circuits — Block Diagram . . . 10-10
10-2 a-e Schematic (Sheets 1 thru 5) . . . 10-11
10-3 a,b Printed Wiring Board Assembly and Parts List (Sheets 1 thru 4) . . . 10-17

### SECTION 11. RF SYNTHESIZER MODULE (A9)

11-1 RF Synthesizer Module (A9) — Block Diagram . . . 11-7
11-2 RF Synthesizer Module (A9) — Assembly and Parts List . . . 11-8
11-3 a,b Reference and Control Board (A9A1) — Block Diagram . . . 11-9
11-4 Reference and Control Board (A9A1) — Schematic . . . 11-10
11-5 Reference and Control Board (A9A1) — Printed Wiring Board Assembly and Parts List . . . 11-11
11-6 310 to 440-MHz Loop Board (A9A2) — Block Diagram . . . 11-13
11-7 310 to 440-MHz Loop Board (A9A2) — Schematic . . . 11-14
11-8 310 to 440-MHz Loop Board (A9A2) — Printed Wiring Board Assembly and Parts List . . . 11-15
11-9 Synthesizer Output Board (A9A3) — Block Diagram . . . 11-17
11-10 Synthesizer Output Board (A9A3) — Schematic . . . 11-18
11-11 Synthesizer Output Board (A9A3) — Printed Wiring Board Assembly and Parts List . . . 11-19
11-12 60.5-MHz Loop Board (A9A4) — Block Diagram . . . 11-21
11-13 a,b 60.5-MHz Loop Board (A9A4) — Schematic (Sheets 1 and 2) . . . 11-22
11-14 60.5-MHz Loop Board (A9A4) — Printed Wiring Board Assembly and Parts List . . . 11-25
11-15 GHz Loop Board (A9A5) — Block Diagram . . . 11-27
11-16 GHz Loop Board (A9A5) — Schematic . . . 11-2[illegible]
11-17 a,b GHz Loop Board (A9A5) — Printed Wiring Board Assembly and Parts List (Sheets 1 and 2) . . . 11-[illegible]

## LIST OF ILLUSTRATIONS (Cont)


| Figure | | Page |
|---|---|---|
| 11-18 | 640-MHz Loop Board (A9A6) — Block Diagram | 11-31 |
| 11-19 | 640-MHz Loop Board (A9A6) — Schematic | 11-32 |
| 11-20 | 640-MHz Loop Board (A9A6) — Printed Wiring Board Assembly and Parts List | 11-33 |
| 11-21 a,b | Synthesizer Motherboard (A9A7) — Printed Wiring Board Assembly and Parts List (Sheets 1 and 2) | 11-35 |
| | **SECTION 12. AUDIO SYNTHESIZER BOARD (A10)** | |
| 12-1 | Block Diagram | 12-3 |
| 12-2 a-c | Schematic (Sheets 1 thru 3) | 12-4 |
| 12-3 | Printed Wiring Board Assembly and Parts List | 12-7 |
| | **SECTION 13. PROCESSOR INTERFACE BOARD (A11)** | |
| 13-1 | Block Diagram | 13-5 |
| 13-2 a-c | Schematic (Sheets 1 thru 3) | 13-6 |
| 13-3 | Printed Wiring Board Assembly and Parts List | 13-9 |
| | **SECTION 14. PROCESSOR BOARD (A14)** | |
| 14-1 | Memory Map | 14-1 |
| 14-2 | Memory Map | 14-3 |
| 14-3 | Block Diagram (01-P22140E001) Part 1 | 14-5 |
| 14-4 a-e | Schematic (Sheets 1 thru 5) | 14-6 |
| 14-5 | Printed Wiring Board Assembly and Parts List | 14-11 |
| 14-6 | Block Diagram (01-P29050H001) Part 2 | 14-13 |
| 14-7 a-f | Schematic (Sheets 1 thru 6) | 14-14 |
| 14-8 | Printed Wiring Board Assembly and Parts List | 14-20 |
| | **SECTION 15. FRONT-PANEL INTERFACE BOARD (A15)** | |
| 15-1 | Block Diagram | 15-7 |
| 15-2 a,b | Schematic (Sheets 1 and 2) | 15-8 |
| 15-3 | Printed Wiring Board Assembly and Parts List | 15-11 |
| | **SECTION 16. FREQUENCY-STANDARD INTERFACE BOARD (A16)** | |
| 16-1 | Block Diagram | 16-1 |
| 16-2 | Schematic | 16-3 |
| 16-3 | Printed Wiring Board Assembly and Parts List | 16-5 |
| 16-4 | Assembly and Parts List | 16-6 |
| | **SECTION 17. RF INPUT MODULE (A17)** | |
| 17-1 | Block Diagram | 17-7 |
| 17-2 | Interconnect Diagram | 17-8 |
| 17-3 a | Assembly and Parts List | 17-9 |
| 17-3 b | RF Input Flex Standard — Printed Wiring Board Assembly and Parts List | 17-10 |
| 17-4 | RF Wattmeter Board (A17A1) — Block Diagram | 17-11 |
| 17-5 | RF Wattmeter Board (A17A1) — Schematic | 17-12 |
| 17-6 | RF Wattmeter Board (A17A1) — Printed Wiring Board Assembly and Parts List | 17-13 |
| 17-7 | Wideband Amplifier Board (A17A2) — Block Diagram | 17-15 |
| 17-8 | Wideband Amplifier Board (A17A2) — Schematic | 17-16 |
| 17-9 | Wideband Amplifier Board (A17A2) — Printed Wiring Board Assembly and Parts List | 17-17 |
| 17-10 | Duplex Generator Board (A17A3) — Block Diagram | 17-19 |
| 17-11 | Duplex Generator Board (A17A3) — Schematic | 17-20 |
| 17-12 | Duplex Generator Board (A17A3) — Printed Wiring Board Assembly and Parts List | 17-21 |

## LIST OF ILLUSTRATIONS (Cont)


| Figure | | Page |
|---|---|---|
| | **SECTION 18. FRONT PANEL ASSEMBLY (A18)** | |
| 18-1 a,b | Schematic | 18-5 |
| 18-2 a | Front Panel — Photo | 18-6 |
| 18-2 b | Inside Front Panel — Photo | 18-7 |
| 18-2 c | Inside Front Panel — Drawing | 18-7 |
| 18-2 d,e | Front Panel Left and Right Flexes — Printed Wiring Board Assemblies and Parts List | 18-8 |
| 18-2 f | Switch Interconnect Board (A18A2) — Printed Wiring Board Assembly and Parts List | 18-9 |
| 18-3 | Display Board (A18A1) — Schematic | 18-10 |
| 18-4 | Display Board (A18A1) — Printed Wiring Board Assembly and Parts List | 18-11 |
| | **SECTION 19. BATTERY ASSEMBLY** | |
| 19-1 | Mounting Detail | 19-1 |
| 19-2 | Schematic | 19-2 |
| 19-3 a,b | Printed Wiring Board Assembly, Parts Location Detail and Parts List | 19-3 |
| | **SECTION 20. CELLULAR TELEPHONE TEST OPTION** | |
| 20-1 | Block Diagram | 20-3 |
| 20-2 a, b | Schematic (Sheets 1 and 2) | 20-4 |
| 20-3 | Printed Wiring Board Assembly and Parts List | 20-7 |
| | **SECTION 21. IEEE/REMOTE INTERFACE OPTION** | |
| | **PART 1. IEEE INTERFACE** | |
| 21-1 | Block Diagram | 21-3 |
| 21-2 a, b | Schematic (Sheets 1 and 2) | 21-4 |
| 21-3 | Printed Wiring Board Assembly and Parts List | 21-7 |
| 21-4 | RF Input Module, IEEE/Remote Interface Options — Assembly and Parts List | 21-9 |
| | **PART 2. REMOTE INTERFACE** | |
| 21-5 a-f | Schematic (Sheets 1 and 6) | 21-11 |
| 21-6 a,b | Printed Wiring Board Assembly and Parts List | 21-17 |
| | **SECTION 22. SECURE COM OPTION** | |
| 22-1 | Block Diagram | 22-3 |
| 22-2 a-g | Schematic (Sheets 1 thru 7) | 22-4 |
| 22-3 | Printed Wiring Board Assembly and Parts List | 22-11 |
| | **SECTION 23. TRUNKED RADIO TEST OPTION** | |
| 23-1 | Block Diagram | 23-3 |
| 23-2 a-e | Schematic (Sheets 1 thru 5) | 23-4 |
| 23-3 | Printed Wiring Board Assembly and Parts List | 23-9 |

# LIST OF TABLES


| Table | | Page |
|---|---|---|
| | **SECTION 1. INTRODUCTION** | |
| 1-1 | Physical Characteristics | 1-1 |
| 1-2 | Electrical Characteristics | 1-1 |
| 1-3 | Input/Output Characteristics | 1-7 |
| 1-4 | List of Subassemblies | 1-8 |
| | **SECTION 2. SYSTEM THEORY OF OPERATION** | |
| 2-1 | AF BUS Control | 2-2 |
| 2-2 | RF BUS Control | 2-3 |
| 2-3 | MOD Control | 2-3 |
| 2-4 | Receiver Control | 2-3 |
| 2-5 | Duplex Control | 2-3 |
| 2-6 | Receiver Filters | 2-3 |
| | **SECTION 3. ALIGNMENT PROCEDURE** | |
| 3-1 | Basic Test Equipment Required | 3-1 |
| 3-2 | Extended Test Equipment Required | 3-1 |
| | **SECTION 4. SYSTEM CHECKOUT AND TROUBLESHOOTING** | |
| 4-1 | Test Equipment for Checkout and Troubleshooting | 4-1 |
| 4-2 | System Checkout and Troubleshooting Procedures | 4-2 |
| 4-3 | Test-Point Identification | 4-13 |
| | **SECTION 5. SYSTEM WIRELIST AND PARTS LIST — SYSTEM MOTHERBOARD (A19)** | |
| 5-1 | System Motherboard Wirelist | 5-2 |
| 5-2 a-r | System Wirelist | 5-59 |
| | **SECTION 6. HIGH-VOLTAGE POWER SUPPLY (A1)** | |
| 6-1 | Wirelist for the High-Voltage Power Supply | 6-2 |
| | **SECTION 8. LOW-VOLTAGE POWER SUPPLY (A3-A6)** | |
| 8-1 | Control Logic Functions | 8-3 |
| 8-2 | Output Voltages | 8-4 |
| | **SECTION 9. SCOPE/DVM CONTROL BOARD (A7)** | |
| 9-1 | Internal DVM Inputs | 9-3 |
| | **SECTION 10. RECEIVER BOARD (A8)** | |
| 10-1 | Functions of Digital Control Bits | 10-5 |
| 10-2 | Low-Pass Filter — Control-Bit Patterns | 10-5 |
| 10-3 | High-Pass Filter — Control-Bit Patterns | 10-5 |
| 10-4 | Modulation-Select — Control-Bit Patterns | 10-5 |
| | **SECTION 15. FRONT-PANEL INTERFACE BOARD (A15)** | |
| 15-1 | AF ADD and DATA BUS | 15-2 |
| 15-2 | Decoding for Display, Function, and Modulation LEDs | 15-2 |
| 15-3 | Range-Attenuator Switching | 15-3 |
| 15-4 | Input Switching | 15-3 |
| 15-5 | RF-Attenuator Encoding | 15-3 |
| 15-6 | Functions of Miscellaneous Inputs | 15-4 |
| 15-7 | Sweep-Select Encoding | 15-4 |

## LIST OF TABLES (Cont)


| Table | | Page |
|---|---|---|
| | **SECTION 17. RF INPUT MODULE (A17)** | |
| 17-1 | Switch Control | 17-4 |
| 17-2 | RF Input Module — Wirelist | 17-5 |
| | **SECTION 18. FRONT PANEL ASSEMBLY** | |
| 18-1 | Controls, Switches and LEDs on the Front Panel | 18-1 |
| 18-2 | Decoding for Display, Function, and Modulation LEDs | 18-4 |

## 1. SCOPE OF MANUAL

This manual contains information for maintenance of Motorola's Communications System Analyzer.

## 2. PURPOSE AND USE

This manual is designed specifically as an aid to troubleshooting and repairing the System Analyzer. It is arranged so that you can conveniently troubleshoot and repair at the board level and pursue detailed investigations to the component level by using the composite drawing of each printed wiring board assembly.

## 3. WARNINGS AND CAUTIONS

You should observe several precautions when handling this equipment.

**WARNING**

This unit is designed to be operated with a ground connection to the chassis via a three-wire power connection. If the unit is not properly grounded while operating from an ac power source, the voltage potential between it and ground may cause an electrical shock.

**WARNING**

This system's Processor board uses a lithium battery as a memory keep-alive voltage source. Do not mutilate or disassemble the battery cell. The lithium metal is a very active material that burns in the presence of water or high humidity. Do not put the battery in fire, attempt to charge it, heat it above 100°C, or solder directly to the cell. Do not overdischarge the cell to a reverse voltage greater than 3V: the battery may burst and burn or release hazardous materials. (See Section 4, Table 4-2, under NON-VOLATILE MEMORY, for battery troubleshooting procedures and cautions.)

***CAUTION***

*Lithium batteries are classified as hazardous materials and must be disposed of accordingly. Do not throw out the battery with the everyday trash. Consult state and local codes for the appropriate disposal procedure. Motorola will dispose of an expended battery if you return it (in the replacement battery container) to the following address: Motorola Inc., Return Goods Department, 1313 East Algonquin Road, Schaumburg, Ill. 60196.*

***CAUTION***

*This equipment contains parts that are subject to damage by static electricity. Take proper precautions when handling them. (For specific precautions on handling CMOS integrated circuits, see Section 4, System Checkout and Troubleshooting, paragraph 4.2.)*

## 4. SERVICE

The Motorola Test-Equipment Repair Center services all test equipment supplied by the Motorola Communications Group. The center maintains a stock of replacement parts for original equipment and a complete library of service information for all Motorola test equipment. (For the request form, see Figure 1 at the end of the section.)

Most in-warranty repairs are performed at the Center. Exceptions include repairs on some equipment not manufactured by Motorola. These are performed by the original supplier under the direction of the Test-Equipment Repair Center. Out-of-warranty service is performed on a time-and-materials basis at competitive rates, with a turn-around goal of less than ten working days. Reply cards returned with repaired instruments continually survey customer satisfaction.

The Test-Equipment Repair Center also provides the convenience of telephone troubleshooting. Frequently, under the direction of the Test-Equipment Repair Center, you will be able to troubleshoot a piece of equipment and isolate defective components via

telephone. Required replacement parts are then immediately shipped to you, thereby reducing shipping time and servicing costs. For telephone troubleshooting, contact the Test-Equipment Repair Center toll free at (800) 323-6967.

All other inquiries and requests for calibration and repairs of test equipment should be directed to the Area Parts Office. This office will contact the Test-Equipment Repair Center, process the necessary paperwork and, if necessary, have the Center contact you to expedite the repair.

## 5. ORDERING REPLACEMENT PARTS

Motorola maintains a number of parts offices strategically located throughout the United States. These facilities are staffed to process parts orders, identify part numbers, and otherwise assist in the maintenance and repair of Motorola Communications products.

Orders for all replacement parts should be sent to the nearest area parts and service center listed below. When ordering replacement parts, be sure to include the complete identification number located on the equipment.

## 6. ADDRESSES

### 6.1 General Offices

MOTOROLA INC.
Communications Division Parts Dept.
1313 E. Algonquin Rd.
Schaumburg, Illinois 60196
Phone: 312-397-1000
Executive Offices: 1301 E. Algonquin Rd.
Schaumburg, Illinois 60196

### 6.2 U. S. Orders

WESTERN AREA PARTS
1170 Chess Drive, Foster City
San Mateo, California 94404
Phone: 415-349-3111
TWX: 910-375-3877

MID-ATLANTIC AREA PARTS
7230 Parkway Drive
Hanover, Maryland 21076
Phone: 301-796-8600
TWX: 710-862-1941

EASTERN AREA PARTS
85 Harristown Road
Glen Rock, New Jersey 07452
Phone: 201-447-4000
TWX: 710-988-5602

SOUTHWESTERN AREA PARTS
3320 Belt Line Road
Dallas, Texas 75234
Phone: 214-241-2151
TWX: 910-860-5505

GULF STATES AREA PARTS
8550 Katy Freeway
Houston, Texas 77024
Phone: 713-932-8955

MIDWEST AREA PARTS
1313 E. Algonquin Rd.
Schaumburg, Ill. 60196
Phone: 312-576-7322
TWX: 910-693-0869

EAST CENTRAL AREA PARTS
12995 Snow Road
Parma, Ohio 44130
Phone: 216-267-2210
TWX: 810-421-8845

PACIFIC SOUTHWESTERN AREA PARTS
9980 Carroll Canyon Road
San Diego, California 92131
Phone: 714-578-2222
TWX: 910-335-1634

SOUTHEASTERN AREA PARTS
5096 Panola Industrial Blvd.
Decatur, Georgia 30032
Phone: 504-981-9800
TWX: 810-766-0876

### 6.3 Canadian Orders

CANADIAN MOTOROLA ELECTRONICS COMPANY
Parts Department
3125 Steeles Avenue
East Willowdale, Ontario
Phone: 516-499-1441
TWX: 610-492-2713
Telex: 02-29944LD

### 6.4 All Countries Except U.S. and Canada

MOTOROLA INC., OR MOTOROLA AMERICAS, INC.
International Parts
1313 E. Algonquin Road
Schaumburg, Illinois 60196 U.S.A.
Phone: 312-397-1000
TWX: 910-693-1592 or 1599
Telex: 722433 or 722424
Cable: MOTOL

MOTOROLA, INC.
COMMUNICATIONS SECTOR
TEST EQUIPMENT REPAIR CENTER
1313 EAST ALGONQUIN ROAD SCHAUMBURG, ILLINOIS 60196

## TEST EQUIPMENT REPAIR REQUEST FORM

This completed form must accompany equipment returned for repair.

| CUSTOMER'S PURCHASE ORDER NO. | | DATE | |
|---|---|---|---|
| MODEL NUMBER | | SERIAL NUMBER | |
| DESCRIPTION OF PROBLEM: | | | |
| REQUESTED REPAIRS: | | | |
| SHIP TO ADDRESS: | | | |
| SHIP VIA: | | | |

Providing the information below will reduce the turnaround time on your Test Equipment Repair.

| MOTOROLA CUSTOMER NUMBER | BILL TAG | SHIP TAG | INTERNAL MOTOROLA ACCOUNT NO. |
|---|---|---|---|
| | | | |

*Figure 1. Repair Request Form*

SIGNED: _____

# SECTION 1. INTRODUCTION

## 1.1 DESCRIPTION

The Motorola Communications System Analyzer is a portable test instrument, designed specifically for servicing and monitoring communications equipment. Its functions supersede those of a Service Monitor, expanding the features and capabilities so that servicing involves only a single instrument, rather than a host of separate equipment.

The R2001D is the standard Communications System Analyzer. The R2002D has the added capability of an IEEE-488 Standard Interface control bus, and the R2008D has the added capability of "Cellular Radio" testing. The R2009D adds both of these capabilities to the basic unit. By improving a technician's efficiency and accuracy, the Analyzer reduces service time.

The Communications System Analyzer generates and monitors signals, performing the tests normally associated with the equipment listed below.

- Spectrum Analyzer
- Duplex Generator
- Modulation Oscilloscope
- Frequency Counter
- AC/DC Digital Voltmeter
- RF Wattmeter/Signal-Level Meter
- General Purpose Oscilloscope
- Multi-Mode Code Synthesizer
- Distortion/SINAD Meter
- Sweep Generator
- DTMF Encode/Decode
- Printer Port

The Analyzer meets the shock and vibration requirements of EIA test RS152B, the same specifications met by Motorola mobile radios. This minimizes failure when the instrument is used in a mobile service van, and means the Analyzer is as tough as the radios it services.

Tables 1-1, 1-2, and 1-3 list the physical, electrical, and input/output characteristics of the Communications System Analyzer.

Table 1-1. Physical Characteristics

| Characteristics | Description |
|---|---|
| Length | 20.00 inches (50.8 cm) |
| Width | 15.50 inches (39.4 cm) |
| Height | 8.25 inches (21.0 cm) |
| Weight | 35.5 pounds (16.1 kg) (excluding battery pack and cover accessories) |

Table 1-2. Electrical Characteristics

| Characteristics | Description |
|---|---|
| **MODES**<br>**Signal Generator Mode** | |
| **Frequency** | |
| Range: | 10 kHz to 999.9999 MHz |
| Resolution: | 100 Hz |
| Accuracy: | Equal to master oscillator time base |
| **Output (into 50 ohms)** | |
| Attenuator: | 16 dB variable plus 10 dB steps over 13 ranges |
| Range FM: | 0.1 μV to 1 Vrms (−127 dBm to +13 dBm) |
| Range AM: | 0.1 μV to 0.4 Vrms |
| Accuracy: | ±2 dB maximum with step attenuator in 10 dB position.<br>±4 dB maximum in any other state. |
| **Spectral purity** | |
| Spurious: | ≤ −40 dB |
| Harmonics: | ≤ −15 dB |

Table 1-2. Electrical Characteristics (Cont)

| Characteristics | Description |
|---|---|
| **MODES** | |
| **Signal Generator Mode** | |
| **Frequency modulation** | |
| Range: | 0 to 75 kHz peak |
| Accuracy: | ±5% of reading |
| Residual FM: | 20 Hz max. at 300 to 3 kHz from $f_c$ |
| Residual AM: | 1.0% max. at 300 to 3 kHz from $f_c$ |
| External/internal frequency range: | 5 Hz to 20 kHz (±3 dB), 50 Hz to 20 KHz (±1 dB) |
| External input: | Approximately 150 mV for 20 kHz deviation |
| Modes: | Internal, external, microphone or all simultaneously |
| **Amplitude modulation** | |
| Range: | 0 to 80% from 1 to 500 MHz |
| Accuracy: | ±10% of full scale from 0% to 50% AM |
| External/internal frequency range: | 5 Hz to 10 kHz (±3 dB), 5 Hz to 3 kHz (±1 dB) |
| External input: | Approximately 150 mV for 80% |
| Modes: | Internal, external, microphone or all simultaneously |
| **Double sideband suppressed carrier** | |
| Carrier suppression: | −15 dB (1 MHz to 500 MHz) |
| **Sweep Generator Mode** | |
| Adjustable sweep width from 10 kHz to 10 MHz at a fixed sweep rate. Synchronized to internal scope display. | |
| **Monitor Mode** | |
| **Frequency** | |
| Range: | 1 MHz to 999.9999 MHz |
| Resolution: | 100 Hz |
| Accuracy: | Equal to that of master oscillator time base |
| **Frequency error indicator** | Autoranging CRT display. Resolution ±10 Hz for frequency error measurements on 1.0 kHz, 10.0 kHz and 100.0 kHz full scale ranges. For frequency errors less than 100 Hz, 1 Hz resolution. Special function control will allow direct frequency read-out to 1 Hz resolution. |
| **Input sensitivity** (over 4 MHz to 1000 MHz) | 1.5 µV for 10 dB EIA SINAD (narrow band ±6 kHz mod. acceptance). 7 µV for 10 dB EIA SINAD (wide band ±100 kHz mod. acceptance). Useable to 1 MHz. |
| **Spurious response** | −40 dBc typical<br>0 dB image at ±21.4 MHz<br>−10 dB at L.O. harmonics ±10.7 MHz |
| **Deviation measurement** | |
| Range: | 1, 10, 100 kHz full scale |
| Accuracy: | ±5% of reading |
| Peak deviation limit alarm: | Set via keyboard to 100 Hz resolution (0 kHz to 99.9 kHz). Audible alarm indicates limit condition and will be active in all Monitor modes. |
| **AM modulation measurement** | |
| Range: | 0 to 100% |
| Accuracy: | ±5% of full scale |
| **Signal strength meter** | |
| Range: | 1 MHz to 999.9999 MHz |
| Sensitivity: | −100 dBm to +52 dBm, combined specification of antenna and transceiver ports. |
| Selectivity: | 30 kHz maximum at 3 dB bandwidth. |
| **RF Wattmeter (Autoranging display)** | |
| Frequency range: | 1 MHz to 1000 MHz |
| Power range: | 0.1 watt to 125 watts |
| Accuracy: | ±10%, 1 watt to 125 watts |
| Protection: | Over temp indicator |
| Scales: | 9.99, 99.9, 125 watts |

Table 1-2. Electrical Characteristics (Cont)

| Characteristics | Description |
|---|---|
| **GENERAL FUNCTIONS** | |
| **Spectrum Analyzer** | |
| **Dynamic range** | 75 dB minimum |
| **Frequency** | |
| Range: | 1 MHz to 1 GHz |
| Scan width: | 100 kHz per division to 1 MHz per division, continuously adjustable. |
| Sensitivity: | −95 dBm minimum |
| **Duplex Generator** | |
| **Frequency offset** | Adjustable from 0 to ±10 MHz in 5 kHz steps, plus fixed offset of ±45 MHz |
| **Frequency resolution** | 5 kHz |
| **Frequency accuracy** | ±.002% |
| **Output level** | −35 dBm minimum into 50 ohm load |
| **Deviation range** | 0 to ±20 kHz peak |
| **Frequency response** | 5 Hz to 20 kHz, ±3 dB |
| **Oscilloscope** | |
| **Size** | 8 cm × 10 cm |
| **Frequency response** | DC to 0.5 MHz (3 dB point) |
| **External vertical input ranges** | 10 mV, 100 mV, 1V, 10V (per division) |
| **Sweep rates** | 1 µs, 10 µs, 0.1 ms, 1 ms, 0.01S, 0.1S (per division) |
| **Sync** | Internal, normal, and automatic mode with adjustable trigger level. |
| **Frequency Counter** | |
| **Normal** | |
| Range: | 10 Hz to 35 MHz |
| Readout: | 5 digit, autoranging |
| Input sensitivity: | 50 mV minimum |
| **Period counting frequency determination** | |
| Range: | 10 Hz to 100 kHz |
| Display: | 4-digit autoranging to 3 kHz, 3-digit autoranging to 100 kHz |
| **Auto tune (SCAN LOCK)** | |
| Range: | In the monitor mode, the unit can automatically find and then tune to an input signal above −30 dBm. Operates from 1 MHz to 1 GHz |
| Acquisition time: | 5 sec. typical to less than 1 sec, if a limited scan is used. |
| Resolution: | ±1 Hz |
| **Digital Voltmeter** | |
| **Readout:** | Autoranging 3-digit display, 1, 10, 100, 300 volts full scale. AC-dBm calibrated across 600 ohms. |
| **DC accuracy:** | ±1% of full scale ±1 least significant digit |
| **AC accuracy:** | ±5% of full scale |
| **AC bandwidth:** | 50 Hz to 20 kHz |
| **Signaling Sequence Encode/Decode** | |
| **Code Synthesizer** | |
| Frequency range: | 5 Hz to 19.9999 kHz sinewave encode. 50 Hz to 9999 Hz decode |
| Resolution: | 0.1 Hz |
| Frequency accuracy: | ±0.01% |
| Distortion: | ≤1% |
| **Signaling Sequences** | |
| General Sequence | Encode up to ten tones with frequencies of 5.0 Hz to 19999.9 Hz and durations of 5 msec to 9999 msec. Decode ten tones with frequencies of 300 Hz to 9999 Hz and durations of 15 msec to 9999 msec. |
| Two Tone A/B (Encode only; use General Sequence to decode) | Tone-Only Sequence<br>Tone and Voice Sequence<br>Two-user programmable<br>(See Figure 1-1 for sequence timing) |

Table 1-2. Electrical Characteristics (Cont)

| Characteristics | Description |
|---|---|
| **Modulation Source** | |
| 5/6 Tone | Digit Frequencies (See Figure 1-2 for sequence timing)<br>0 – 600 Hz<br>1 – 741 Hz<br>2 – 882 Hz<br>3 – 1023 Hz<br>4 – 1164 Hz<br>5 – 1305 Hz<br>6 – 1446 Hz<br>7 – 1587 Hz<br>8 – 1728 Hz<br>9 – 1869 Hz<br>R – 459 Hz<br>X – 2010 Hz |
| **Mobile Telephone** | |
| IMTS | Complete IMTS base-station simulation. |
| MTS | (See Figure 1-3 for sequence timing) |
| 2805 | (See Figure 1-4 for sequence timing) |
| Select V | Tone length – 70 ms |
| ZVEI | Digit Frequencies<br>1 – 1060 Hz<br>2 – 1160 Hz<br>3 – 1270 Hz<br>4 – 1400 Hz<br>5 – 1530 Hz<br>6 – 1670 Hz<br>7 – 1830 Hz<br>8 – 2000 Hz<br>9 – 2200 Hz<br>0 – 2400 Hz<br>R – 2600 Hz |
| Modified ZVEI | Tone length – 70 ms<br>Digit Frequencies<br>1 – 970 Hz<br>2 – 1060 Hz<br>3 – 1160 Hz<br>4 – 1270 Hz<br>5 – 1400 Hz<br>6 – 1530 Hz<br>7 – 1670 Hz<br>8 – 1830 Hz<br>9 – 2000 Hz<br>0 – 2200 Hz<br>R – 2400 Hz |
| CCIR (100 ms) | Tone length – 100 ms<br>Digit Frequencies<br>1 – 1124 Hz<br>2 – 1197 Hz<br>3 – 1275 Hz<br>4 – 1358 Hz<br>5 – 1446 Hz<br>6 – 1540 Hz<br>7 – 1640 Hz<br>8 – 1747 Hz<br>9 – 1860 Hz<br>0 – 1981 Hz<br>R – 2110 Hz |
| CCIR (70 ms) | Tone length – 70 ms<br>Digit Frequencies<br>Same as CCIR (100 ms) |
| EEA | Tone length – 40 ms<br>Digit Frequencies<br>Same as CCIR |
| **Tone remote access** (Encode only; use General Sequence to decode) | Remote base access sequence as follows:<br>Tone A for 150 msec<br>Tone B for 40 msec 10 dB below Tone A<br>Tone A continuously 30 dB below the first Tone A burst |
| **Digital private line (DPL)** | Codes 000 to 777 and inverted for encode. Decodes all valid DPL codes. |
| **Fixed 1 kHz** | |
| Accuracy: | Equal to master time base |
| Distortion: | ≤1% |
| **External input** | |
| Microphone: | Standard TMN-6013 microphone interface with IDC. |
| External Jack | |
| Frequency range: | 5 Hz to 19999.9 Hz |
| Level: | 7 Vrms maximum |
| Impedance: | 10K ohm minimum |
| **Code synthesizer external output level** | 0 to 3 Vrms into a 600 ohm load |

Table 1-2. Electrical Characteristics (Cont)

| Characteristics | Description |
|---|---|
| **Distortion/SINAD Meter** | |
| **Input frequency:** | 1 kHz ±1 Hz |
| **Input level range:** | 0.1V to 10 Vrms |
| **SINAD accuracy:** | ±1 dB at 12 dB SINAD |
| **Distortion range:** | 1% to 20% |
| **Distortion accuracy:** | ±0.5% of Distortion for 1% ≤THD ≤10%<br>±2% of Distortion for 10% ≤THD ≤20% |
| **Analog Synthesizer Tuning (AST)** | |
| **Step size:** | Variable steps from 3200 Hz to 3.2 GHz per 360° of rotation. |
| **Calibration:** | 32 steps per 360° rotation |
| **Time Base** | |
| **Standard TCXO** | Aging: $\pm 1 \times 10^{-6}$ per year<br>Temp: $\pm 1 \times 10^{-6}$ maximum error over the 0° to 55°C temp range |
| **Optional ovenized high stability** | Aging: $\pm 1 \times 10^{-6}$ per year<br>Temp: $\pm 0.05 \times 10^{-6}$ maximum error over the 0° to 55°C temp range (warmup to $\pm 5 \times 10^{-7}$ of final frequency within 20 minutes) |
| **Power and Environmental** | |
| **AC** | 100 to 130 Vac or 200 to 260 Vac, switch-selectable; 47 to 400 Hz |
| **DC** | +11.0 to +16 Vdc external input |
| **Optional battery** | 13.6V battery; 50 minutes typical |
| **Temperature range** | 0° to 55°C operation; −40° to 85°C storage |

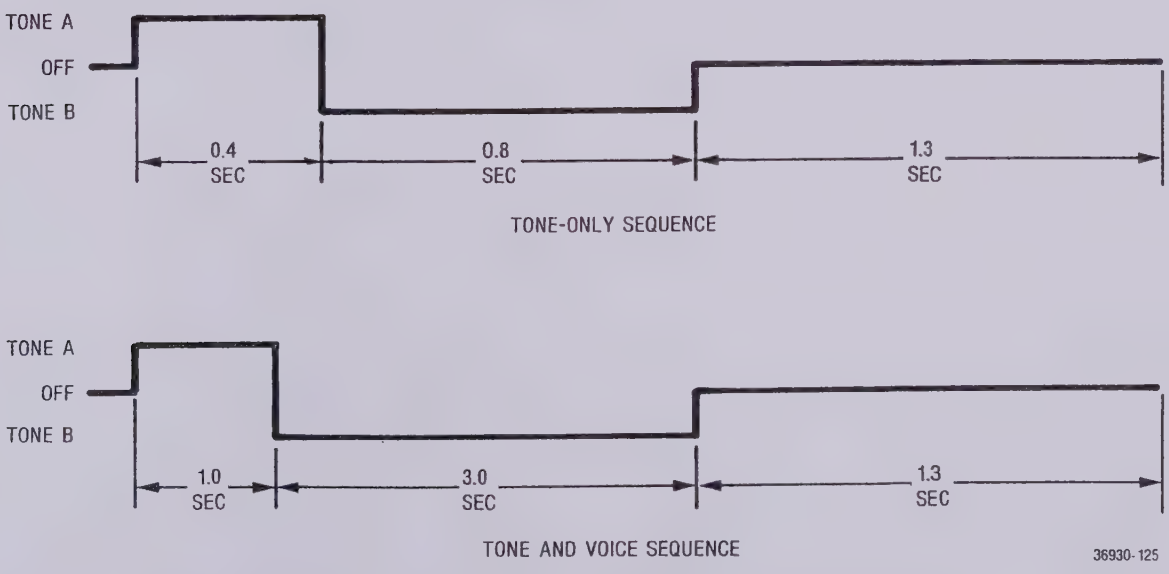


*Figure 1-1. Two-Tone (A/B) Sequence Timing*

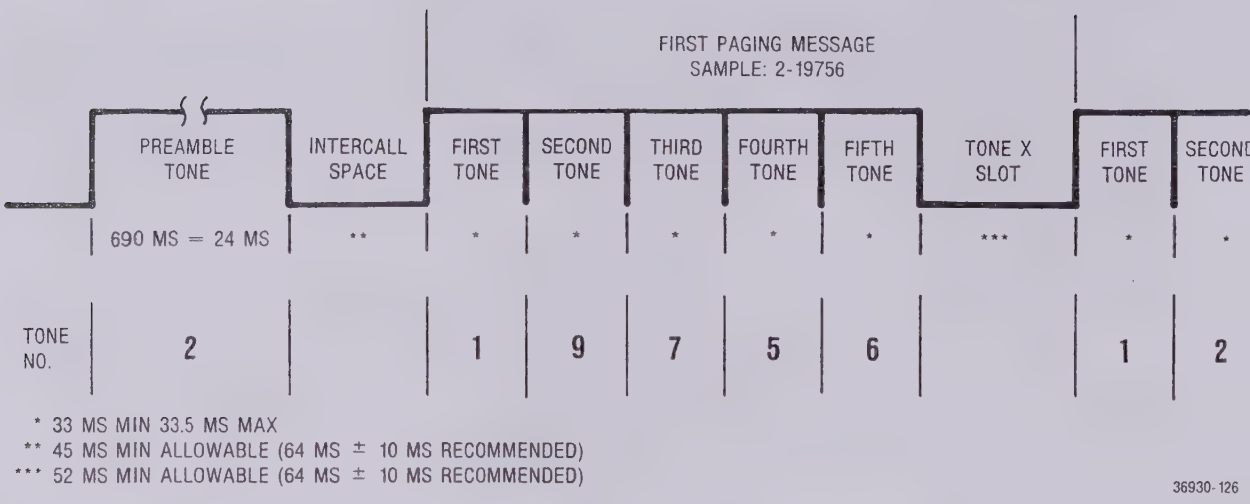


*Figure 1-2. 5/6 Tone Sequence Timing*

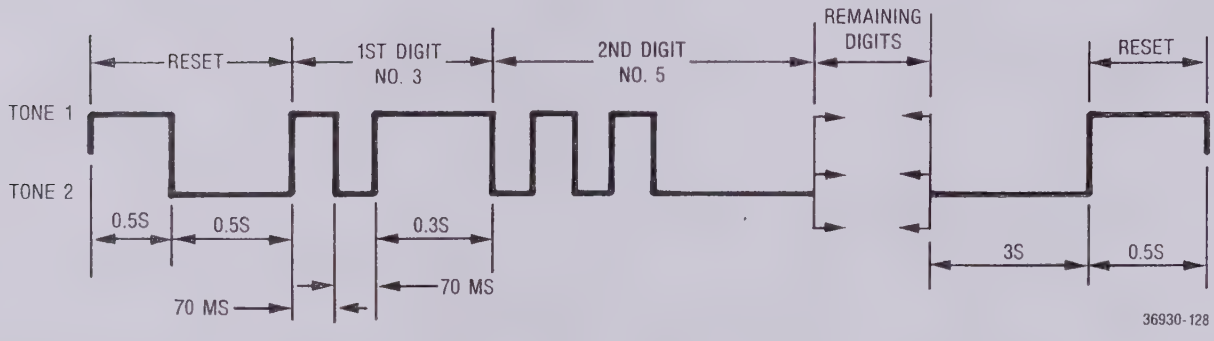


*Figure 1-3. MTS Sequence Timing*

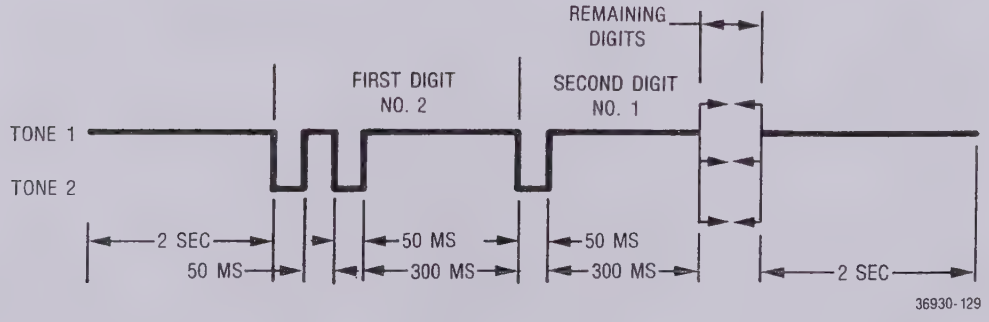


*Figure 1-4. 2805 Sequence Timing*

Table 1-3. Input/Output Characteristics

| Characteristic | Description |
|---|---|
| **Input** | |
| **Ext Mod In** | 10K ohms nominal, 150 mV typical for 20 kHz dev. FM or 80% AM |
| **Mic** | Mic input provides bias and IDC limiting suitable for Motorola TMN-6013 handset. PTT switches R2001 from monitor to generate. |
| **Ext Horiz** | 1 volt minimum for full screen deflection. Maximum input 10 volts. |
| **Vert/SINAD/Dist/DVM/Counter In** | 1 Meg ohm, 40 pf Nominal; ±300 Vdc max, 300 Vrms max at frequencies below 500 Hz, 10 Vrms max up to 35 MHz<br>• Scope Vert In: dc to 500 kHz or 50 Hz to 500 kHz ac mode (±3 dB)<br>• Distortion/SINAD In: 0.1 to 10 Vrms in at 1 kHz<br>• DVM In: 1, 10, 100 and 300V full scale ac (true rms) or dc. AC bandwidth 50 Hz to 20 kHz for ±5% F.S. accuracy (ac dBm calibrated across 600 ohms)<br>• Frequency Counter In: 50 mV or greater required from 10 Hz to 35 MHz |
| **RF In/Out** | 50 ohms nominal, 125 watts max (1 to 1000 MHz) |
| **ANTENNA** | 50 ohms nominal, 50 mW max (1 to 1000 MHz). Fuse protected. |
| **Ext Wattmeter** | Characteristics suitable for Motorola ST-1200 series Wattmeter Elements |
| **10 MHz STD In (rear panel)** | 70 to 350 mVrms input required at 10 MHz, impedance greater than 50 ohms. |
| **Output** | |
| **Mod Out** | Up to 11 Vp-p into 600 ohms 5 Hz to 20 kHz |
| **Demod Out** | Typically 10 Vp-p into 600 ohms for ±5 kHz deviation narrowband, 15 Vp-p for ±75 kHz deviation wideband. DC to 20 kHz response |
| **RF In/Out** | 1.0 Vrms (+13 dBm) to 0.1 μVrms (−127 dBm) 50 ohm nominal source impedance. 10 kHz to 1 GHz. |
| **Duplex Gen Out** | −35 dBm typical, 50 ohm nominal source impedance 1 MHz to 1 GHz |
| **10 MHz STD Out (rear panel)** | 250 mVrms nominal output into 50 ohms |

## 1.2 MAJOR ASSEMBLIES

Should it break down, the Communications System Analyzer is designed to be serviced quickly and easily. The majority of the circuitry is on 12 modular, plug-in circuit boards which have built-in test points. These test points help in locating the problem to a specific board. Simple plug-in replacement gets the instrument back in service.

A list of all subassemblies is given in Table 1-4. T assembly locations are shown in Figures 1-5 and 1-6.

Table 1-4. List of Subassemblies

| Ref. Des. | Item | Part Number As Labeled | Replacement Order Part No. |
|---|---|---|---|
| A1 | High-Voltage Power Supply | 01-P22010E001 | RTP-1007A |
| A2 | Scope Amplifier Board | 01-P22020E001 | RTC-1005A |
| A3 | Battery Charger Board | 01-P22030E001 | RTP-1008A |
| A4 | Control Board | 01-P22040E001 | RTP-1009A |
| A5 | Output Board | 01-P22050E001 | RTP-1010A |
| A6 | Switcher Board | 01-P22060E001 | RTP-1011A |
| A7 | Scope/DVM Control Board | 01-P22070E001 | RTC-1006A |
| A8 | Receiver Board | 01-P22080E001 | RTL-1019A |
| A9 | RF Synthesizer Module | 01-P22090E001 | RTC-1007A |
| A9A1 | Reference and Control Board | 01-P22210E001 | RTC-4039A |
| A9A2 | 310 to 440 - MHz Loop Board | 01-P22220E001 | RTC-4040A |
| A9A3 | Synthesizer Output Board | 01-P22230E001 | RTC-4041A |
| A9A4 | 60.5-MHz Loop Board | 01-P22240E001 | RTC-4042A |
| A9A5 | GHz Loop Board | 01-P22250E001 | RTC-4043A |
| A9A6 | 640-MHz Loop Board | 01-P22260E001 | RTC-4044A |
| A9A7 | Synthesizer Motherboard | 01-P22270E001 | RTC-4045A |
| A10 | Audio Synthesizer Board | 01-P22100E001 | RTC-1008A |
| A11 | Processor Interface Board | 01-P22110E001 | RTC-1009A |
| *A12 | Option Slot | – | – |
| *A13 | Option Slot | – | – |
| A14 | Processor Board | 01-P22140E001 | RTC-1010A |
| A15 | Front-Panel Interface Board | 01-P22150E001 | RTC-1011A |
| A16 | Frequency-Standard Interface Board | 01-P22160E001 | RTL-1020A |
| A17 | RF Input Module | 01-P22170E001 | RTL-1021A |
| A17A1 | RF Wattmeter Board | 01-P22280E001 | RTL-4158A |
| A17A2 | Wideband Amplifier Board | 01-P22290E001 | RTL-4156A |
| A17A3 | Duplex Generator Board | 01-P22300E001 | RTL-4157A |
| A18 | Front Panel Assembly | 01-P22180E001 | Not Assigned |
| A19 | System Motherboard | 01-P22190E001 | Not Assigned |
| Option A | Cellular Tel Test Board | 01-P22120E001 | RTC-1012A |
| Option B | IEEE/Remote Interface Board | 01-P22130E001 | RTC-1013A |
| Option C | Secure Comm Board | 01-P23360K001 | |
| Option D | Trunked Radio Test Board | 01-P29000H001 | |

*Options A thru D can be placed into either Option Slot.

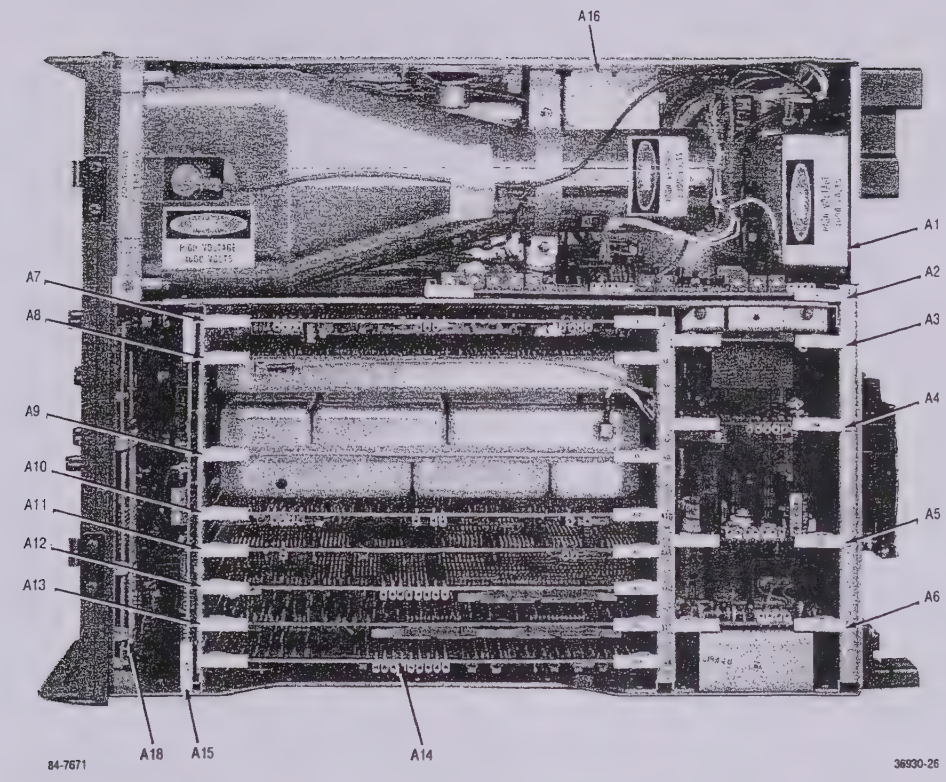


*Figure 1-5. Communications System Analyzer — Top View, Cover Removed*

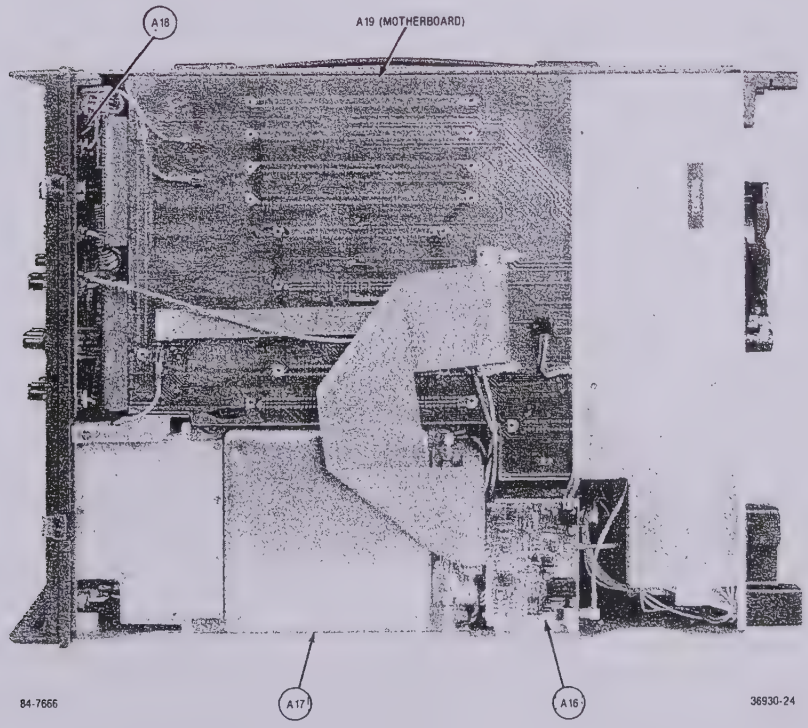


*Figure 1-6. Communications System Analyzer — Bottom View, Cover Removed*

# SECTION 2.
# SYSTEM THEORY OF OPERATION

## 2.1 DESCRIPTION

The Communications System Analyzer can perform nine basic functions: it can act as a generator, a wattmeter, a monitor, a duplex generator, a code synthesizer, a frequency counter, a digital voltmeter (DVM), an oscilloscope, and a distortion/SINAD meter. Measurements can be printed out via the Printer Port. General operation of the unit will simultaneously incorporate all these functions.

The following discussion will cover the block diagrams for each of the basic functions plus a discussion on the processor control of the system. A functional block diagram of the total system is shown at the end of the section in Figure 2-1. To clarify the total system configuration, only the major signal paths between each of the modules are shown.

## 2.2 SYSTEM CONTROL

### 2.2.1 PROCESSOR

System control is the primary responsibility of the internal microprocessor. To control the operating mode, the processor manipulates inputs from front-panel controls and system-status inputs. From the front panel, the processor monitors the keyboards, the function-select switch, the modulation-control switch, the RF-scan switch, the image switch, the bandwidth switch, the horizontal and vertical range switches, and the step-attenuator switch. This information, plus internal status information, causes the processor to display the appropriate information on the CRT, to program the center frequency, to set up the generate or monitor mode, and to make the internal switching arrangements for the selected operating state.

### 2.2.2 PROCESSOR BUS

The interface to and from the microprocessor is via the processor bus. This bus consists of a 16-bit address bus, an 8-bit data bus, and a 7-bit control bus. The bus interfaces the processor to its program memory (ROM), scratch pad memory (RAM), IEEE interface option, cellular mobile telephone option, RS-232 option, Trunking option, Secure options, and the peripheral-interface adapters (PIA). The PIA is the mechanism by which the processor interfaces with the system. A PIA consists of a dual 8-bit latch which may be programmed as either an input or an output for the microprocessor. System input and control information passes to and from the microprocessor via three system control busses attached to a PIA, which is located on the Processor Interface board (A11).

### 2.2.3 CONTROL BUSSES

The three control busses within the System Analyzer are called the RF control bus and AF control busses 1 and 2. The AF control busses consist of a 4-bit address bus, a 4-bit data bus, and two enable lines. The four address bits determine which of 16 possible latches the four bits of data are to be sent to or received from. The enable lines trigger the actual transfer of data. The RF control bus is a clocked serial bus which consists of five data lines, a clock line, and a latch line. The serial data stream is 24 bits long. Tables 2-1 through 2-6 show the busses and the function of each bit. Figure 2-2 at the end of the section shows the overall bus structure of the System Analyzer.

Table 2-1. AF BUS Control

| DATA / ADRS | AF BUS #1 D3 | AF BUS #1 D2 | AF BUS #1 D1 | AF BUS #1 D0 | AF BUS #2 D3 | AF BUS #2 D2 | AF BUS #2 D1 | AF BUS #2 D0 |
|---|---|---|---|---|---|---|---|---|
| 0 | AUDIO SYNTH BITS 0-3 | | | | Display LEDs | | | |
| 1 | AUDIO SYNTH BITS 7-4 | | | | Function LEDs | | | |
| 2 | AUDIO SYNTH BITS 11-8 | | | | Mode LEDs | | | |
| 3 | AUDIO SYNTH BITS 15-12 | | | | INPUT SCOPE ATTENUATION | | | |
| | | | | | 0.001 | 0.01 | 0.1 | 1.0 |
| 4 | PL SELECT | DPL CLOCK ENABLE | DPL SELECT | AUDIO SYNTH BIT 16 | (MON +DSB) /GEN SELECT | $\overline{\text{OFFSET}}$ $\overline{\text{ATTEN}}$ ENABLE | ATTEN INT/EXT SELECT | EXT IN AC/DC SELECT |
| 5 | MOD TO SPEAKER ENABLE | AUDIO ATTEN 30 dB | AUDIO SYNTH BIT 17 | AUDIO ATTEN 10 dB | RF ATTENUATOR POSITION | | | |
| 6 | DPLX MOD ENABLE | DSBSC MOD ENABLE | FM MOD ENABLE | AM MOD ENABLE | RF OVER TEMP | $\overline{\text{WB SIG}}$ $\overline{\text{PRESENT}}$ | ANT SELECT | SPARE INPUT |
| 7 | BINARY MOD ENABLE | | | | $\overline{\text{IF}}$ $\overline{\text{OVERLOAD}}$ | SIGNAL PRESENT | OFFSET ON/OFF | WB/NB |
| 8 | DVM MODE SELECT | | | | $\overline{\text{CSSG}}$ $\overline{\text{CONT}}$ $\overline{\text{EN}}$ | $\overline{\text{CSSG}}$ $\overline{\text{BURST}}$ $\overline{\text{EN}}$ | IMAGE HI/LO | MON/GEN |
| | SIGNAL STRENGTH | DV2 | DV1 | DV0 | | | | |
| 9 | SCOPE TRIGGER ENABLE | PK DET FM MOD ENABLE | PK DET AM MOD ENABLE | PK DET DEMOD ENABLE | SCOPE VERTICAL SWITCH POSITION | | | |
| | | | | | $\overline{\text{10V/DIV}}$ | $\overline{\text{1V or 25 kHz/ DIV}}$ | $\overline{\text{0.1V or 2.5 kHz/ DIV}}$ | $\overline{\text{0.01V or 0.25 kHz/DIV}}$ |
| A | DIST NOTCH FILTER X1/×10 | INT DVM ×0.1 ENABLE | WB/NB SELECT | ALARM ENABLE | SPARE INPUT | SCOPE HORIZONTAL SWITCH POSITION | | |
| B | HORIZ SCOPE MODE SELECT | | VERT SCOPE MODE SELECT | | | | | |
| C | ANTENNA ENABLE | MOD TO SCOPE DISABLE | EXT/ DISTORTION SELECT | 0.01-1/ 1-10 SWEEP SELECT | | | | |
| D | | SCOPE TIME BASE CONTROL | | | PERIOD/ FREQ SELECT | COUNTER/ DVM SELECT | SPARE OUTPUT | SPARE OUTPUT |
| | | C2 | C1 | C0 | | | | |
| E | | | | | DVM RMS/DIR SELECT | COUNTER RANGE | | |
| F | | | | | | COUNTER INPUT SELECT | | |
| | | | | | | IF/BFO | | EXTERNAL |

Table 2-2. RF BUS Control

| BIT | CONWD1 | CONWD2 | CONWD3 | CONWD4* | CONWD5 |
|---|---|---|---|---|---|
| 0 | | | | 0.5-1 GHz EN | |
| 1 | | | | GHz LOOP SENSE | |
| 2 | | | | VCO SELECT | |
| 3 | | | | 300-350 CLAMP | |
| 4 | | | | 350-500 MHz EN | |
| 5 | MOD CONT A | MOD ×2/×1 | MOD SENSE | 0.01-250 MHz EN | SW1 |
| 6 | MOD CONT B | BW CONT | MOD CONT C | 250-350 MHz EN | SW2 |
| 7 | ÷N MSB | ÷N MSB | ÷N MSB | WB AMP HI/LO | ÷N MSB |
| 8 | ↑ | ↑ | ↑ | R0 $\overline{\text{AM/FM/CW CRT EN}}$ | ↑ |
| 9 | | | | R1 $\overline{\text{WB DET EN}}$ | |
| 10 | 24 MHz | 60 MHz | 310-440 MHz | R2 $\overline{\text{NBFM GAIN ×10}}$ | DUPLEX |
| 11 | LOOP | LOOP | LOOP | R3 SPARE | GENERATOR |
| 12 | CONTROL | CONTROL | CONTROL | R4 SPARE | CONTROL |
| 13 | | | | R5 $\overline{\text{SPKR EN}}$ | |
| 14 | | | | R6 $\overline{\text{BIT 12}}$ | |
| 15 | ↓ | ↓ | ↓ | R7 DEMOD INV | ↓ |
| 16 | ÷N LSB | ÷N LSB | ÷N LSB | R8 $\overline{\text{WB/NB}}$ | ÷N LSB |
| 17 | ÷A MSB | ÷A MSB | ÷A MSB | R9 $\overline{\text{LPFL 300}}$ | ÷A MSB |
| 18 | ↑ | ↑ | ↑ | R10 $\overline{\text{LPFL 3K}}$ | ↑ |
| 19 | | | | R11 $\overline{\text{HPFL 3K}}$ | |
| 20 | | | | R12 $\overline{\text{HPFL 300}}$ | |
| 21 | | | | R13 $\overline{\text{AM EN}}$ | |
| 22 | | | | R14 $\overline{\text{FM EN}}$ | |
| 23 | ÷A LSB | ÷A LSB | ÷A LSB | R15 $\overline{\text{SSB EN}}$ | ÷A LSB |

*Note: Functions with bar over top are active low.
Bits 0-7 of CONWD4 are RF Synthesizer control bits.
Bits 8-23 of CONWD4 are Receiver control bits.

Table 2-3. MOD Control

| A | B | C | BW CONT | Function |
|---|---|---|---|---|
| 0 | 0 | 0 | 0 | SWEEP |
| 0 | 1 | 1 | 0 | NARROW MOD |
| 1 | 0 | 1 | 0 | WIDE MOD |
| 1 | 1 | 1 | 1 | MOD INHIBIT |

Table 2-4. Receiver Control

| R0 | R1 | R2 | R8 | R13 | R14 | R15 | Function |
|---|---|---|---|---|---|---|---|
| 0 | 1 | 1 | 1 | 0 | 1 | 1 | AM WB |
| 0 | 1 | 1 | 0 | 0 | 1 | 1 | AM NB |
| 0 | 1 | 1 | 1 | 1 | 1 | 0 | CW/SSB WB |
| 0 | 1 | 1 | 0 | 1 | 1 | 0 | CW/SSB NB |
| 0 | 1 | 1 | 1 | 1 | 0 | 1 | FM WB |
| 0 | 1 | 0 | 0 | 1 | 0 | 1 | FM NB |
| 0 | 0 | X | X | 1 | 1 | 1 | WB DET |

Table 2-5. Duplex Control

| SW1 | SW2 | Function |
|---|---|---|
| 0 | 0 | 0-10 MHz |
| 1 | 0 | 45 MHz |
| 1 | 1 | OFF |

Table 2-6. Receiver Filters

| Low-Pass | | | High-Pass | | | |
|---|---|---|---|---|---|---|
| R9 | R10 | FREQ | R6 | R11 | R12 | FREQ |
| 0 | 1 | 300 Hz | 0 | 1 | 1 | 5 Hz |
| 1 | 0 | 3 kHz | 1 | 1 | 0 | 300 Hz |
| 1 | 1 | 20 kHz | 1 | 0 | 0 | 3 kHz |

## 2.3 GENERATE MODE

### 2.3.1 DESCRIPTION

The generate mode provides a variable-level RF output that is phase-locked to the internal 10-MHz standard. AM, FM, and sideband modulation is possible on the output signal.

A block diagram of the generate mode is shown at the end of the section in Figure 2-3.

### 2.3.2 FREQUENCY STANDARD

To provide a 10-MHz signal to the EXTERNAL 10 MHz OUTPUT and to the RF Synthesizer module (A9), the Frequency-Standard Interface board (A16) contains a 10-MHz crystal oscillator with buffering and switching. An external 10-MHz standard signal can be used by switching the IN/OUT switch on the bottom panel to IN. The signal applied to the 10-MHz STD input/output port on the back is then routed through the A16 board to the A9 module.

### 2.3.3 RF SYNTHESIZER

The RF Synthesizer uses the 10-MHz standard signal for its phase-locked-loop reference frequencies and also converts the 10-MHz standard signal to a TTL level for system use. The RF Synthesizer consists of a fixed 640-MHz loop and a programmable GHz loop. The programming of the GHz loop is provided by the RF CONTROL BUS from the processor. The Synthesizer Output board chooses one of three possible outputs for the SYNTH RF output signal. The first is directly from the GHz loop. The second is the output of the divide-by-two on the GHz loop, which provides frequencies from 250 to 500 MHz. For outputs below 250 MHz, the output of the GHz loop is mixed with the fixed 640-MHz signal, and the difference signal is used for the output. To obtain outputs from 10 kHz to 250 MHz, the processor programs the GHz loop for frequencies between 640.01 and 890 MHz, respectively.

FM and sweep modulation is also implemented in the GHz loop by modulating its 60.5 MHz reference. The Audio Synthesizer board (A10) supplies the FM modulation signal, which provides modulation frequencies from 5 Hz to 20 kHz. FM capability is 100 kHz peak deviation. The Scope/DVM Control board (A7) supplies the sweep-modulation signal. The sweep capability, 10 MHz, is used for both the sweep-generator and the spectrum-analyzer functions.

### 2.3.4 WIDEBAND AMPLIFIER

The SYNTH RF signal is amplified and leveled in the RF Input module (A17) by the Wideband Amplifier (A17A2). The signal level at the output of the Wideband Amplifier is detected and compared to the AM MOD + DC REF signal from the front panel's level control. If there is a difference between the two signal levels, the ALC amplifier provides an error voltage. This error voltage controls the attenuation of the voltage-controlled attenuator (VCA) in the direction that will make the detected RF output equal to the AM MOD + DC REF signal. There are two possible VCAs for the output leveling. The VCA on the Wideband Amplifier board is used for frequencies from 1 to 1000 MHz. For frequencies below 1 MHz, the VCA on the Processor Interface board (A11) is set to minimum attenuation, and the VCA on the RF Synthesizer module (A9) does the leveling. Amplitude modulation is incorporated by summing the modulation signal with the dc reference signal, thus forcing the leveling loop to vary the output level in proportion to the modulating signal. The signal from the RF-level detector (CARRIER + MOD LVL) is used by the processor to determine the RF output level and the percent AM. The leveled output range of the Wideband Amplifier is from −3 dBm to +13 dBm (0.16 to 1.0 Vrms).

The leveled output from the Wideband Amplifier is applied to the Generate/Monitor switch. For generating AM, FM, and CW signals, the switch connects the Amplifier output to the step attenuator. For double sideband-suppressed carrier (DSBSC) generation, the Wideband Amplifier output is connected to the local-oscillator (L.O.) port on the receive mixer, and the attenuator is connected to the RF port. The DSBSC modulation signal then drives the IF port of the mixer, giving a DSBSC signal at the RF port and thus at the step attenuator. For monitor mode, the Wideband Amplifier output is connected to the L.O. port on the receive mixer, and the attenuator is connected to the RF port. The difference-frequency output of the receive mixer is sent to the Receiver board through the 10.7 MHz IF output.

### 2.3.5 STEP ATTENUATOR

Level control in 10-dB increments is provided by the step attenuator. The total range of the attenuator is from 0 to 130 dB. For the basic System Analyzer, the step attenuator is controlled directly by a knob on the front panel. With the IEEE control option (A13), the step attenuator is electrically programmable and controlled by the processor. In this case, the knob on the front panel is connected only to a rotary switch which directs the processor in setting the attenuation level. Under IEEE control, commands coming via the IEEE bus determine the attenuator setting.

### 2.3.6 INPUT/OUTPUT

The step attenuator is connected to the output port relay, which chooses between the Antenna or RF In/Out port. There is a 30-dB difference between these two ports. The Antenna port is for receiving low-level signals (less than 100 mW) and for generating high-level signals (+13 dBm). The RF In/Out port is for receiving high-level signals, with a maximum of 125W.

## 2.4 WATTMETER

Input power measurements from 1 to 125W are made only through the RF In/Out port. (To measure the power of signals under 1W, see paragraph 2.5, MONITOR MODE.)

A block diagram of the wattmeter is shown at the end of the section in Figure 2-4.

The RF input signal is first attenuated by a 14-dB attenuator and then is loaded with a 50-ohm, 16-dB attenuator. A sample of the input RF voltage between the two attenuators is detected by the power detector, to give a dc output proportional to the peak RF voltage. The amplifier following the detector buffers and amplifies the detected voltage to provide the RF INPUT POWER signal to the processor. The processor then determines and displays the RF input power.

A temperature sensor located near the flange of the RF load alerts the processor when the load temperature exceeds 80°C. The processor responds to the OVER TEMPERATURE signal by displaying a warning message on the CRT and by sounding the audible alarm.

## 2.5 MONITOR MODE

### 2.5.1 DESCRIPTION

In monitor mode, RF signals from an antenna or from a transmitter can be checked directly for frequency error, signal strength, modulation level, and spectral content. Also provided is off-the-air decoding of two-tone or 5/6-tone paging, private line (PL), digital private line (DPL) or mobile telephone signaling. Another feature is Scan Lock, which allows the System Analyzer to acquire a received signal of greater than −30 dBm.

A block diagram of the monitor mode is shown at the end of the section in Figure 2-5.

### 2.5.2 RF INPUT

For signals less than 100 mW, the RF signal to be monitored is applied to the Antenna port; for signals greater than 100 mW, to the RF In/Out port. The port-select switch routes one of these signals to the step attenuator.

In the monitor mode, the RF input from the step attenuator is connected to the RF port on the receive mixer. The output from the Wideband Amplifier is switched to the L.O. port on the receive mixer. The processor programs the RF Synthesizer for an output frequency that is offset 10.7 MHz from the frequency to be monitored. The offset may be above or below the center frequency, as selected by the front panel's Image switch. The 10.7-MHz difference signal at the IF port of the receive mixer is filtered by a 20-MHz low-pass filter. The filter output provides the 10.7-MHz IF signal to the Receiver board (A8). The overall gain of the RF Input module (A17) is −8 dB ±2 dB.

### 2.5.3 RECEIVER

The 10.7-MHz IF signal is first filtered and amplified on the Receiver board, providing a bandwidth of 280 kHz. This signal is split between the linear IF and the logarithmic IF by an active power splitter. The linear IF provides for demodulation of AM, FM, and SSB signals. The logarithmic IF provides two functions: spectrum analyzer and signal-strength indicator.

#### 2.5.3.1 Linear IF

The linear IF bandwidth is determined by a wide/narrowband filter which follows the power splitter. The modulation-acceptance bandwidths are ±6 kHz for narrowband and ±100 kHz for wideband. Next, the IF signal is down-converted to 700 kHz by an active AGC'd mixer. Immediately following the second mixer is the 700-kHz second IF amplifier. The output level of the amplifier is rectified to detect amplitude modulation and to provide AGC control on the second IF amplifier, the second mixer, and the delayed-AGC amplifier. The second IF signal is applied to the FM demodulator and to the BFO mixer for SSB demodulation. The L.O. signal for the BFO mixer comes from a 700-kHz (±3 kHz) oscillator on this board. This oscillator is controlled from the front panel.

Demodulated audio from the AM, FM, or SSB demodulator is routed to the audio filters by the audio-select switch, which is under processor control. The audio filters consist of a selectable-bandwidth low-pass filter (300 Hz, 3 kHz, or 20 kHz), and a selectable-bandwidth high-pass filter (300 Hz or 3 kHz). The selected demodulator output is used to provide three receiver outputs: 1) The VOL CONTROL AUDIO signal is the unfiltered version of the selected demodulator output. It goes to the Volume control on the front panel, to an amplifier on the Scope/DVM Control board (A7) and finally to the speaker; 2) The DEMOD CAL AUDIO output is the filtered version of the demodulator output and provides calibrated audio levels for determining modulation level; 3) The DEMOD OUT signal is also a filtered version of the demodulator output and drives the front panel's DEMOD OUT port.

#### 2.5.3.2 Logarithmic IF

The 10.7-MHz IF input signal is down-converted to 460 kHz by mixing the input signal with the 10.24-MHz signal from a second local oscillator. The second local oscillator is provided by a crystal oscillator on the Receiver board. Two outputs are provided by the logarithmic amplifier and detector. These outputs provide a dc voltage that is proportional to the logarithm of the 10.7-MHz IF input level. One output, SPECTRUM ANALYZER VOLT, is the vertical input to the scope for the spectrum-analyzer display. The other output, SIG STRENGTH VOLTAGE, is measured by the digital voltmeter (DVM) on the Processor Interface board (A11) to provide the signal strength (in dBm) of the 10.7-MHz IF input signal. The logarithmic amplifier has a dynamic range of approximately 80 dB, covering input levels from −110 to −30 dBm.

#### 2.5.3.3 Signal-Present Detector

During Scan Lock operation, a wideband-signal detector indicates the presence of a signal within 20 MHz of the L.O. frequency. The 10.7 MHz IF input is amplified and applied to a diode detector. When the signal level is above about −30 dBm and within 20 MHz of the L.O. frequency, the WB SIG PRES output goes low, indicating signal presence.

#### 2.5.3.4 Frequency-Error Indicator

One of three signals internal to the Receiver may be switched to the IF/BFO output for use in frequency-error indication. During AM and FM monitor operation, the limited, linear IF output is selected and routed to the frequency counter on the Processor Interface board (A11). The difference between this frequency and 700 kHz is computed by the processor and displayed as frequency error. During SSB monitor operation, the BFO output is switched to the IF/BFO output. The difference between this frequency and 700 kHz is computed and displayed as BFO error. During Scan Lock operation, the wideband-signal detector's output is switched to the IF/BFO output. The frequency of this signal is equal to the difference between the RF input frequency and the L.O. frequency.

### 2.6 DUPLEX GENERATOR

Simultaneous generate and monitor functions are available with the Duplex Generator. The frequency spread between generate and monitor frequencies is limited to a range of 0 to 10 MHz and a fixed frequency of 45 MHz.

A block diagram of the Duplex Generator function is shown at the end of the section in Figure 2-6.

The Duplex Generator signal is generated by mixing the L.O. signal for the first receive mixer with a signal from the offset phase-locked-loop (PLL). The frequency of the offset PLL equals the desired spread between generate and monitor frequencies, minus the 10.7-MHz IF offset. The monitor function is unaffected by the Duplex mode and operates as described in paragraph 2.5.

Frequency modulation of the Duplex output is obtained by modulating the offset PLL via the OFFSET MOD signal line. The OFFSET MOD signal is generated on the Audio Synthesizer board (A10). The offset PLL is controlled via the RF CONTROL BUS.

### 2.7 CODE SYNTHESIZER

Three simultaneous modulation sources are possible with the internal code synthesizer. The levels of a private line (PL) or digital private line (DPL) source, a fixed 1-kHz source, and external modulation sources can be individually controlled and summed together to give the composite modulation signal. The code synthesizer provides the modulation source for the system in the generate mode and can be used as an audio frequency source. For the IEEE option, modulation levels can be controlled by the processor.

A block diagram of the code synthesizer is shown at the end of the section in Figure 2-7.

The PL signaling-sequence is generated by an audio synthesizer with an output frequency range from 5 Hz to 20 kHz in 0.1-Hz steps. The frequency is programmed by the processor in response to the operator's request from the keyboard through the CRT display. The programmable attenuator following the audio synthesizer provides attenuation levels of 10 dB and 30 dB for the Tone-Remote-Access Sequence.

DPL code words are generated by the processor in response to the code entered by the operator. The 23-bit DPL word is stored in the DPL generator and continuously output when selected. Either PL or DPL signals are switched to the code synthesizer level control (Code Synth Lvl) on the front panel.

A 1-kHz reference signal from the RF Synthesizer is bandpass-filtered to provide a low distortion, 1-kHz sinewave to the front panel's 1 KHz Level control.

Two sources of external modulation are possible through two ports on the front panel: a standard Motorola microphone-interface port and a BNC port. The microphone input (Mic) is connected to an instantaneous deviation-control (IDC) circuit for peak-limiting. The composite of the two external modulation sources is the signal which goes to the Ext Level control on the front panel.

On systems without one of the Remote options, the wipers of the level-control potentiometers will be jumpered from their respective inputs to the summation amplifier on the Audio Synthesizer board (A10). On those systems with one of the Remote options, select switches on the IEEE/RS-232 Interface board send either the tops of the level controls (Code Synth, 1 KHz, or Ext) or their respective wipers to the programmable attenuators. For remote control, they select the tops; for local control, the wipers. During the Remote control mode, the processor-controlled programmable attenuator on the IEEE/RS-232 board controls the modulation level. For the local mode, the attenuators are programmed for zero attenuation so that the wipers of the level control set the modulation levels directly.

The three modulation sources are summed together on the Audio Synthesizer board according to what is set on the level controls. This composite modulation signal is applied to 1) the appropriate modulator, 2) the modulation-measuring circuitry (MOD CAL AUDIO), 3) the audio amplifier (SPKR AUDIO) and 4) the front panel's modulation output port (Mod Out). To provide a low-impedance output, the signal to the front panel's port is driven by a buffer amplifier.

For AM, the composite modulation is summed with +5 Vdc. This signal (5V + AM MOD) is applied to

the top of the front panel's RF Level control. The wiper of the RF Level control is then applied to the AM MOD + DC REF input of the Wideband Amplifier board (A17A2). The dc component on this input controls the average power output, and the ac component provides AM. On systems under Remote option control, the wiper of the RF Level control is connected to a programmable attenuator on the IEEE/RS-232 Interface board and then to the AM MOD + DC REF input of the Wideband Amplifier. This allows remote control of the RF output power.

## 2.8 FREQUENCY COUNTER

Three possible signal sources can be connected to the frequency counter. Two of the signals are internal to the system: one is used to determine the error frequency of the monitored carrier (IF/BFO), and the other is used to decode the off-the-air signal sequences. The third input is from the external input port (Counter In) on the front panel.

A block diagram of the frequency counter is shown at the end of the section in Figure 2-8.

The Receiver's (A8) DEMOD CAL AUDIO output, which is used for signal-sequence decoding, is routed through a gain-selectable amplifier and the Scope/DVM Control board (A7) and to the Front-Panel Interface board (A15). A switch on the Front-Panel Interface board routes this signal or the signal from the front panel's external input port to the range attenuator. The range attenuator provides stepped sensitivity settings according to the setting on the front panel's vertical range switch. An amplifier following the range attenuator amplifies and limits the signal amplitude for the frequency-counter input.

A select switch on the Processor Interface board (A11) routes either the frequency-counter output from the Front-Panel Interface board or the IF/BFO output from the Receiver to the frequency-counter circuitry. The signal selected is determined by the system's operating mode and controlled by the processor.

The frequency counter uses two different measuring techniques: the direct count and the reciprocal count. A 16-bit gated accumulator is used in the direct-count method to determine the input frequency. Gate times from 1 msec to 10 sec are user-selectable or automatically selected by the processor to give the maximum possible resolution. The gate times are derived from the SYNTH 1 KHz signal coming from the Audio Synthesizer board (A10).

The same 16-bit accumulator is used in the reciprocal-count method. The accumulator counts the number of clock cycles coming from a clock generator during one period of the unknown signal. Clock rates from 10 MHz to 100 kHz are user-selectable or automatically selected by the processor to give the maximum possible resolution. The clock rates are derived from the SYNTH 10 MHz signal coming from the RF Synthesizer module (A9).

The 16-bit frequency-counter output is transferred directly to the processor bus through a peripheral-interface adapter (PIA). The processor, in turn, adjusts the data for the gate time used and then processes the information to obtain the required frequency display.

## 2.9 DIGITAL VOLTMETER (DVM)

The DVM circuitry allows the processor to access many voltages throughout the system. From this information, the processor is able to determine and display parameters such as output power level, modulation level, input power level, etc. In addition, an external voltage applied to the DVM input port on the front panel can be measured and displayed.

A block diagram of the DVM function is shown at the end of the section in figure 2-9.

Internal voltage measurements are selected and ranged over two decades by the internal DVM-select switch and the X1.0/X0.1 attenuator, respectively, on the Scope/DVM Control board (A7). The resulting 0 to 1-Vdc signal is routed to the internal/external DVM-select switch on the Processor Interface board (A11) which applies the voltage to the A/D converter. The A/D converter converts the input voltage into a 10-bit digital number which is input to the processor. One of eight internal voltages may be selected for measurement as required by the processor to determine display data. Inputs to the A/D must be less than 1 Vdc; therefore, with the decade-ranging attenuator (X1.0/X0.1), the maximum input voltage to the internal DVM is 10 Vdc. The X1.0 position gives improved resolution for reading voltages less than 1 Vdc. To keep CRT information current, each of the required measurements is made in sequence, at an approximate rate of thirty per second.

The following signals can be connected to the DVM input:

- Two modulation signals (MOD CAL AUDIO and CARRIER + MOD LVL) and a demodulated signal (DEMOD CAL AUDIO) are made available to the peak detectors. Measuring the positive and negative peaks of the selected signal enables the processor to determine the level of modulation.
- A low-pass filter (LPFL) removes the ac component from the CARRIER + MOD LVL signal so that the output level of the generated RF can be determined. (See paragraph 2.3.4.)
- The SIG STRENGTH VOLTAGE line from the logarithmic amplifier on the Receiver board (A8) provides a dc level proportional to the strength in dBm of the on-channel received signal.
- The RF INPUT POWER signal line from the RF Input module provides the processor input for the internal wattmeter (paragraph 2.4). Inputs for the external wattmeter element (EXT FWD PWR and EXT RFL PWR) from the front panel's port provide the information for the external-wattmeter display.

- A signal line (DC IN) from the rear panel's dc-input port (DC POWER) is brought to the processor to determine battery voltage. The voltage is attenuated by a factor of 10 to stay with the 10V maximum input to the select switch. The processor uses the battery-voltage measurement to warn the operator when the battery is near its discharged state.
- A rectified and filtered version of the input to the 1-kHz notch filter is the last internal measurement point. This measurement is used in calculating the distortion/SINAD reading. (For further information on the distortion/SINAD meter, see paragraph 2.10.)
- In the external DVM mode, voltages applied to the external DVM input port on the front panel are ranged by processor-control over four decades on the Front-Panel Interface board (A15). The result is a 0 to 1-Vrms signal at the output of the attenuator for inputs of 0 to 300 Vrms. The signal is routed directly through the A7 board by the rms/distortion-select switch to the rms-to-dc converter on the A11 board. It is then routed through the internal/external DVM-select switch, to the A/D converter, and finally to the processor's data bus.

For external dc measurements, the ac/dc-select switch chooses the dc-coupled path from the DVM input port. A low-pass filter on the A15 board removes ac components. The rejection of the low-pass filter at 50 Hz is at least 20 dB. The rms-to-dc converter reads the absolute value of the dc input, and the sign detector provides polarity information.

For ac voltage measurements, the low-pass filter is reprogrammed for less than 1% attenuation out to 20 kHz. The ac/dc-select switch chooses the ac-coupled path, and the rms-to-dc converter converts the ac input into a dc voltage equal to the rms voltage of the input.

## 2.10 DISTORTION/SINAD METER

The System Analyzer can measure the distortion of a signal with a fundamental frequency of 1 kHz. As the block diagram (Figure 2-9) shows at the end of the section, the 1-kHz input enters the DVM input port through the ac-coupled path and is ranged to between 0 and 1 Vrms by the ranging attenuator. The signal is then routed through the notch filter where the fundamental frequency is removed. The rms/distortion-select switch chooses output of the notch filter and sends it to the rms-to-dc converter's input. Here, the rms-to-dc converter measures the rms voltage (to 10 kHz) of the distortion components. The input of the notch is rectified, filtered, and multiplied by 1.11 (the rms-to-average ratio for a sinusoid). The resulting dc voltage is measured by the internal DVM as described in paragraph 2.9. The processor divides the rms output voltage of the notch filter by the rms input voltage to the notch filter to obtain a distortion ratio, and then converts the distortion ratio to dB for the SINAD display. The display for percent distortion is obtained by multiplying the distortion ratio by 100.

## 2.11 OSCILLOSCOPE

Three basic functions are provided by the system oscilloscope: 1) alphanumeric, 2) modulation, and 3) external-oscilloscope display.

A block diagram of the oscilloscope is shown at the end of the section in Figure 2-10.

Drive signals for the CRT are provided by circuits on the Scope Amplifier board (A2). Horizontal and vertical signals are amplified by their respective amplifiers from input levels of 0.5 V/Div to the levels required on the deflection plates. A Z-Axis modulator circuit controls the cathode-to-grid bias voltage on the CRT to give intensity control.

### 2.11.1 HORIZONTAL INPUT

External or internal signals can be selected for the horizontal-amplifier input. External signals come from the front panel's Ext Horiz input port. Internal signals come from the A7 Scope/DVM Control board (INT SCOPE HORIZ) or from the horizontal timebase generator on the Scope Amplifier board (A2). When either the external input or the timebase generator is selected, it is summed with a dc signal (HORIZ POSITION) which comes from the front panel's Horiz position control. The dc signal controls the horizontal position of the scope display.

The front panel's Ext Horiz input is applied to the top of the horizontal vernier-gain potentiometer. The wiper of the gain potentiometer provides the HORIZ INPUT signal to the pre-amplifier on the Front-Panel Interface board (A15). The pre-amplifier provides the required horizontal-input sensitivity and buffers the signal from the select switch on the Scope Amplifier board.

The horizontal timebase generator provides a six-decade sweep range from 1 µsec to 100 msec per division. Control of the timebase generator comes from the front panel's horizontal switch through the processor.

The INT SCOPE HORIZ signal is a sawtooth waveform which is provided by the output of either the horizontal character-sweep generator or the synthesizer-sweep generator. A switch on the Scope/DVM Control board controls which output is selected. During character display, it selects the character sweep, which provides the horizontal sweep for the raster-scan character display. During spectrum-analyzer and RF generator sweep operation, control of the INT SCOPE HORIZ signal alternates between character sweep and synthesizer sweep. This allows the oscilloscope and character information to be simultaneously displayed on the CRT. This also allows the scope sweep to be synchronized with the RF Synthesizer sweep.

### 2.11.2 VERTICAL INPUT

One of four possible signals can be switched to the vertical amplifier's input by a select switch on the Scope/DVM Control board. The 700-kHz IF and SPEC ANA VERT signals from the Receiver board provide the displays for IF envelope and spectrum analyzer, respectively. The vertical character-sweep generator provides the vertical sweep for the raster-scan character display. The remaining input (VERT FROM RNG SW) is connected either to the front panel's external vertical input or to the modulation-scope input (INT SCOPE TO RNG SW).

A vertical pre-amplifier on the Front-Panel Interface board gives a vertical sensitivity of 10 mV/Div and provides positioning and vernier-gain capability for its input. This amplifier provides the VERT FROM RNG SEL output to the A7 board. It is preceded by a four-decade range attenuator which is controlled from the front panel's vertical switch through the processor. The attenuator provides external vertical-input sensitivities from 0.01 to 1.0 V/Div and modulation-scope sensitivities from 0.25 to 25 kHz/Div.

A select switch ahead of the attenuator chooses between the external vertical input or the modulation-scope inputs. Further switching selects ac or dc coupling for the external input. The modulation-scope signal path is switched to one of three possible sources on the Scope/DVM Control board. Demodulation signals from the Receiver are selected via the DEMOD CAL AUDIO path. FM signals are selected via the MOD CAL AUDIO signal path; AM signals are selected via the CARRIER + MOD LVL signal paths. The Audio Synthesizer board provides the MOD CAL AUDIO signal, while the RF Input module provides the CARRIER + MOD LVL signal.

A Z-Axis select circuit on the Scope/DVM Control board gates either the CHARACTER GEN signal for character displays or the retrace blanking signal from the timebase generator for scope displays to the Z-Axis modulator on the Scope Amplifier board.

*Figure 2-1. Block Diagram*

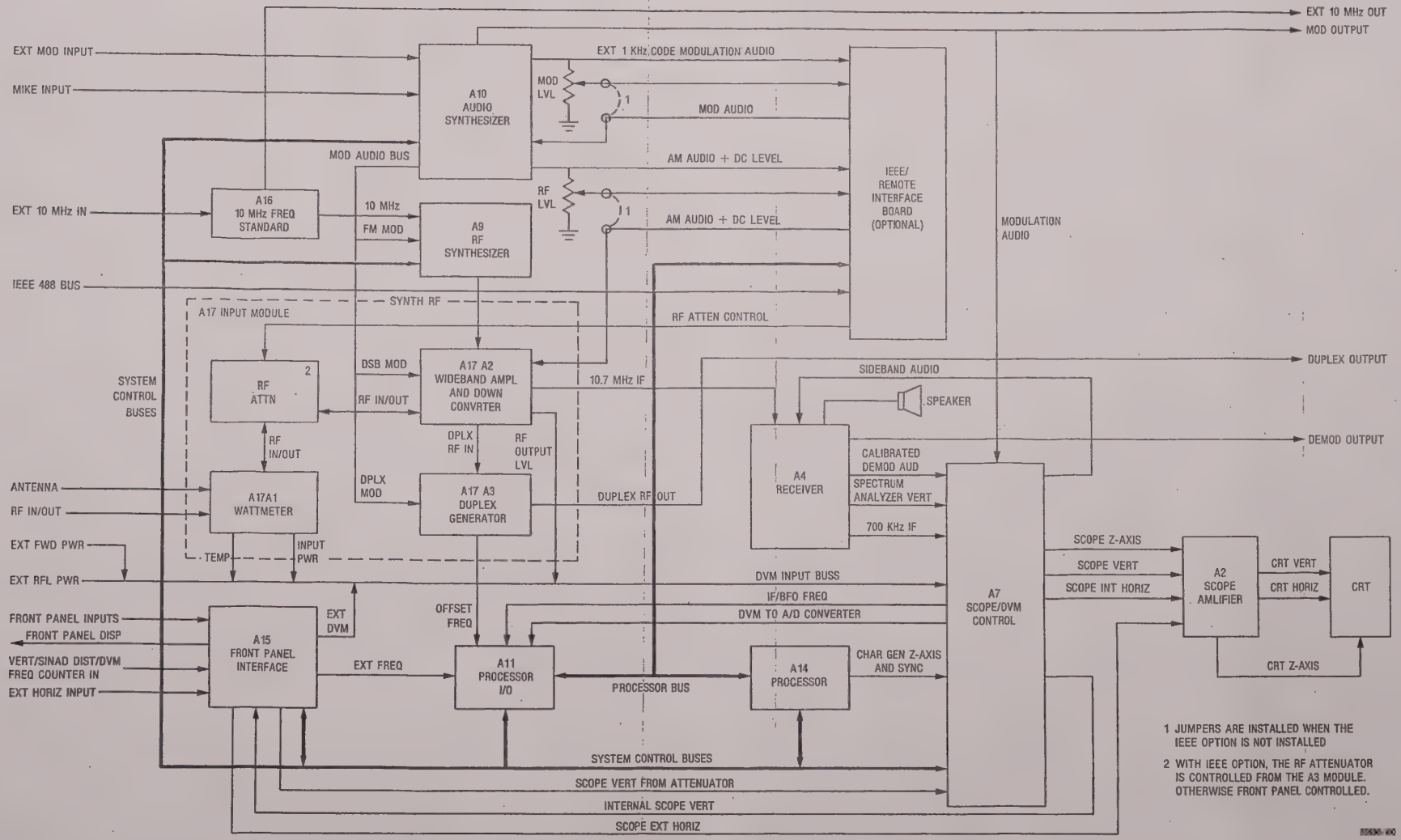

*Figure 2-2. Bus Structure*

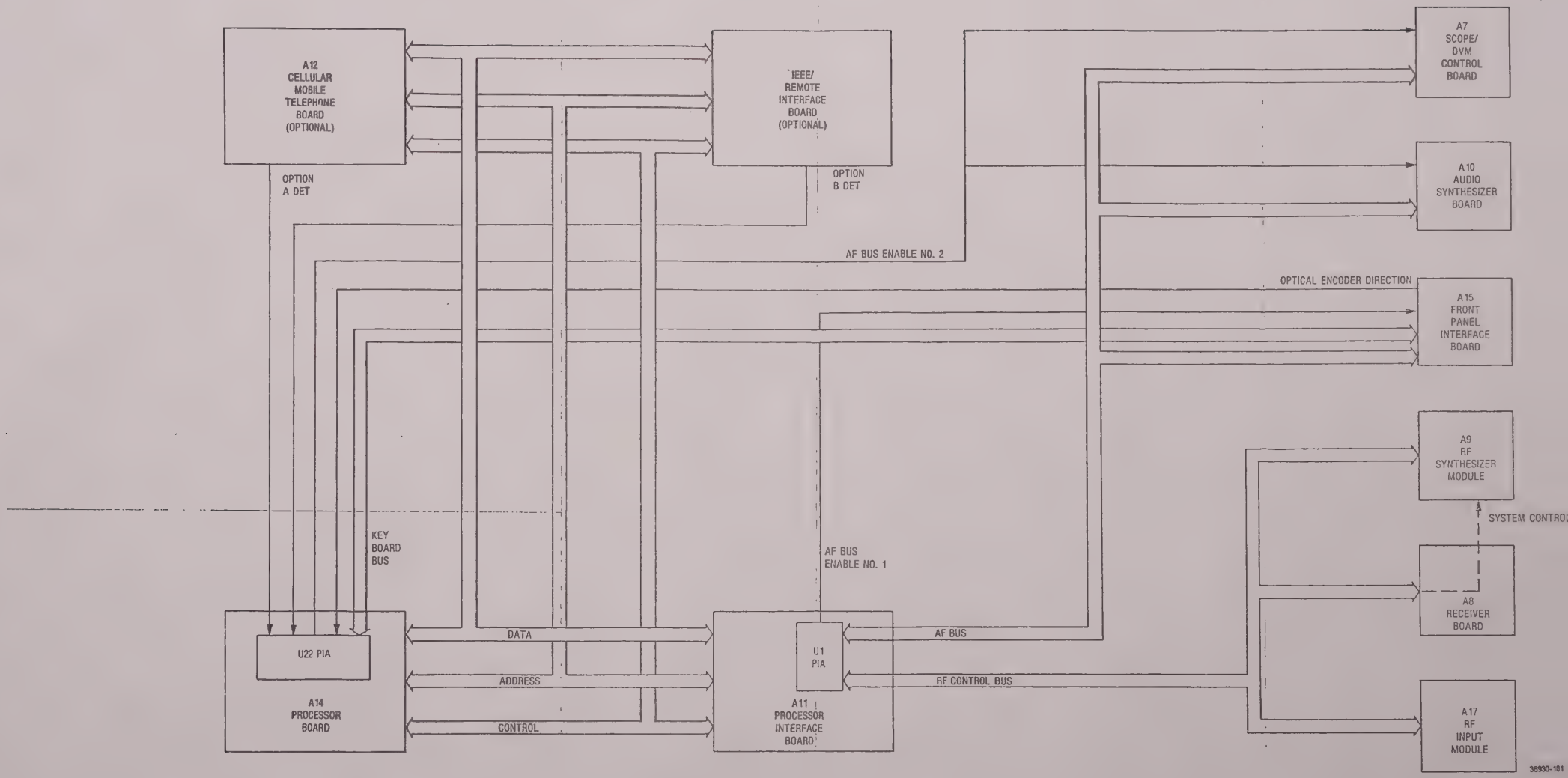

*Figure 2-3. Block Diagram*

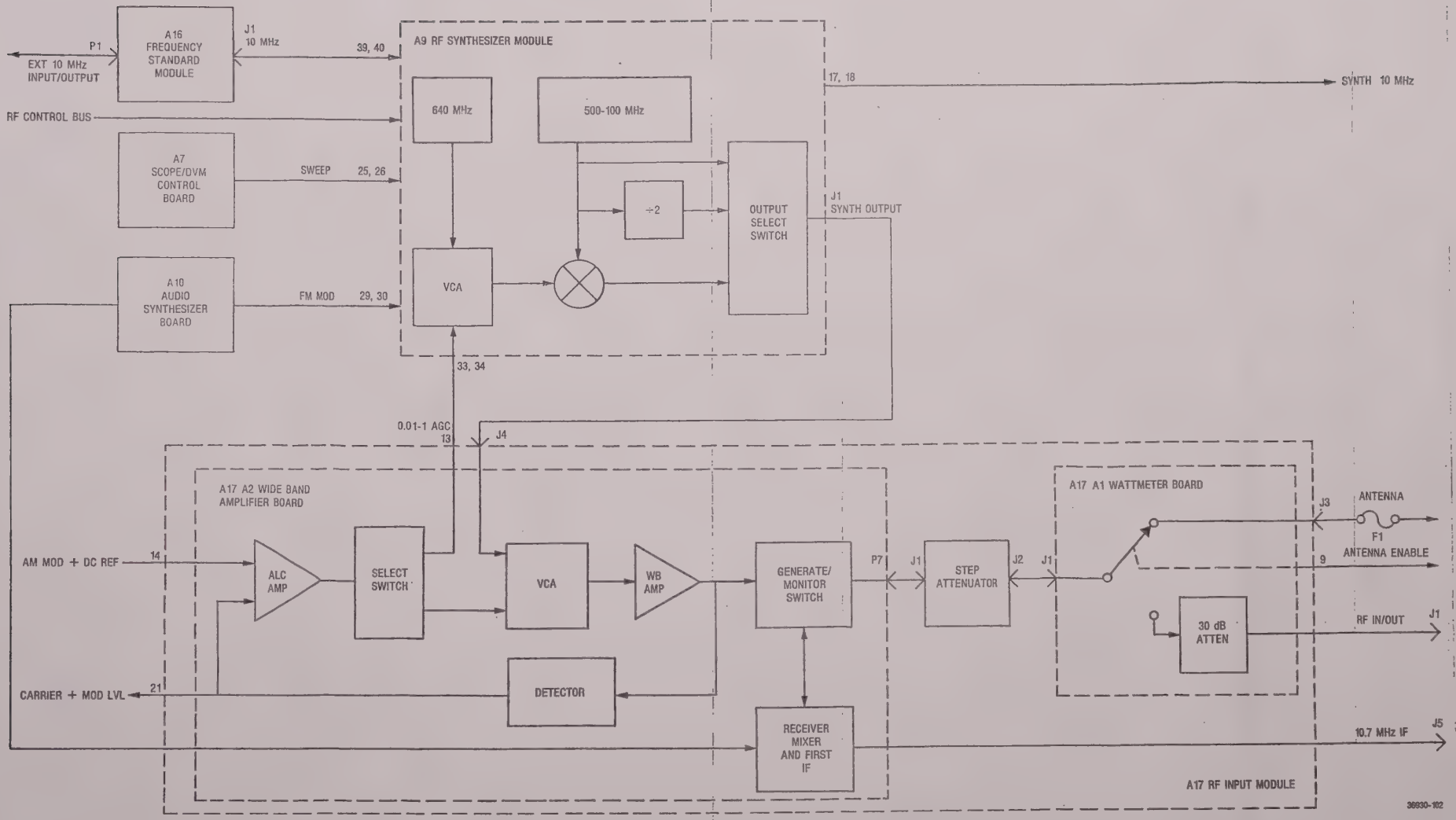

*Figure 2-4. Block Diagram*

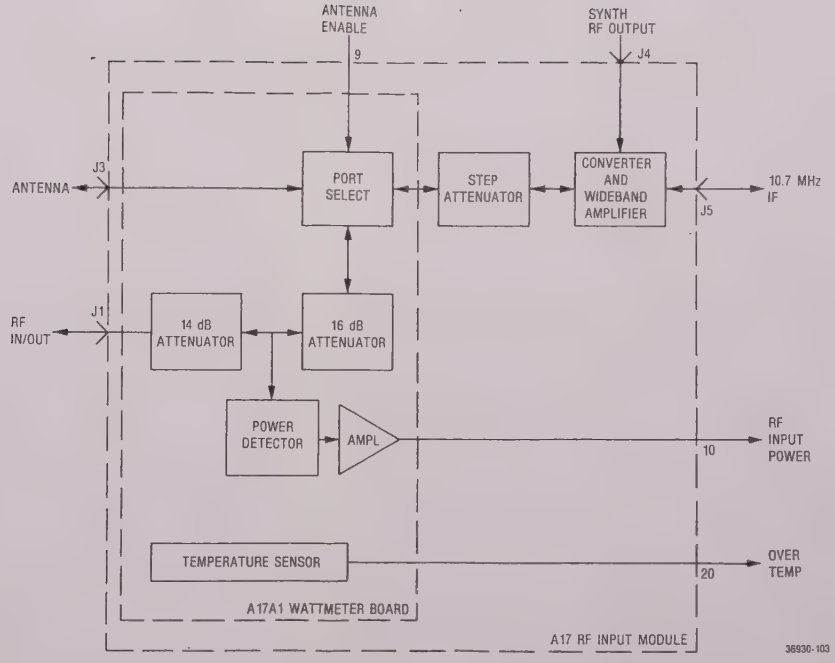

*Figure 2-5. Block Diagram*

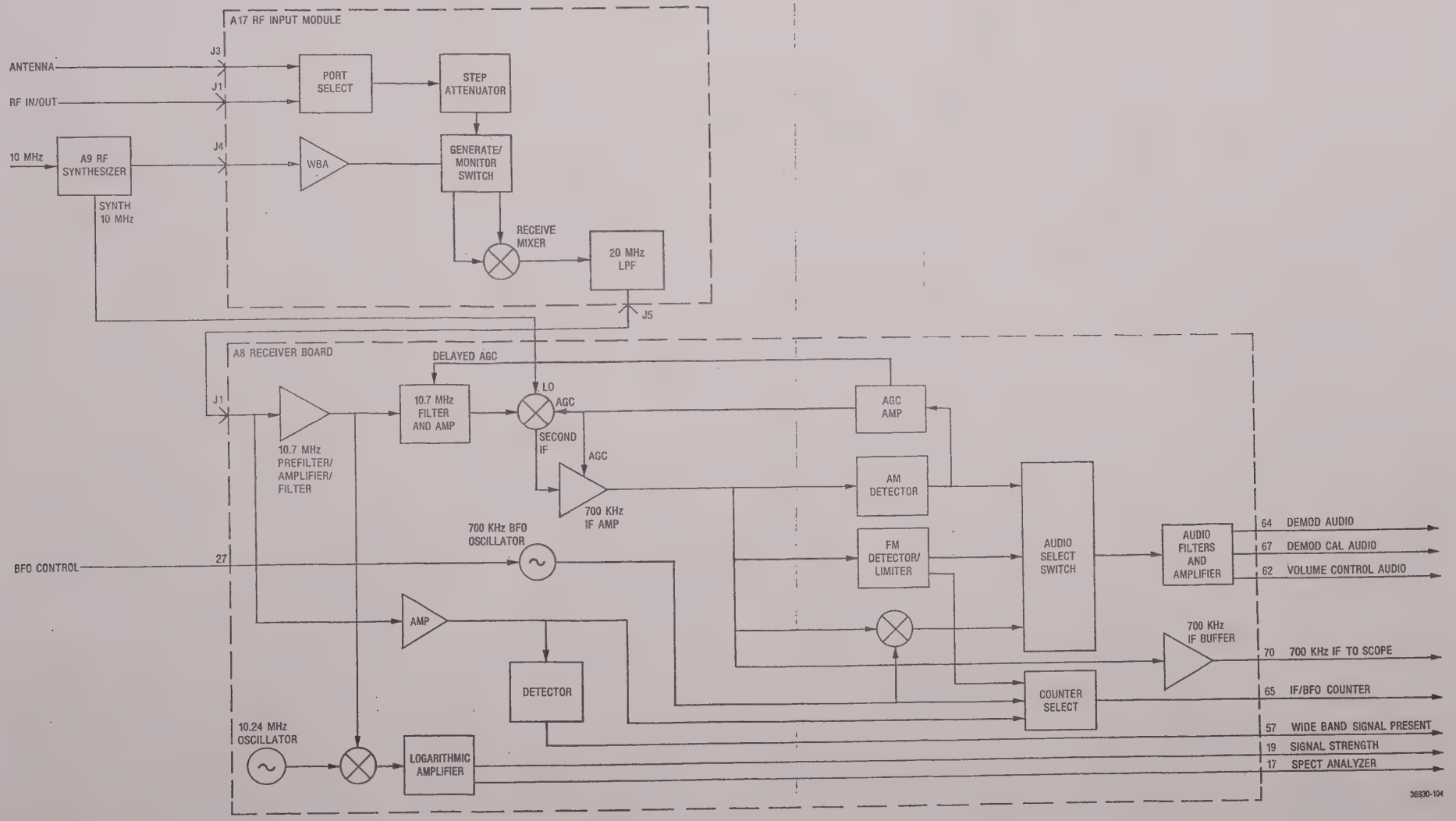

DUPLEX GENERATOR

*Figure 2-6. Block Diagram*

CODE SYNTHESIZER

*Figure 2-7. Block Diagram*

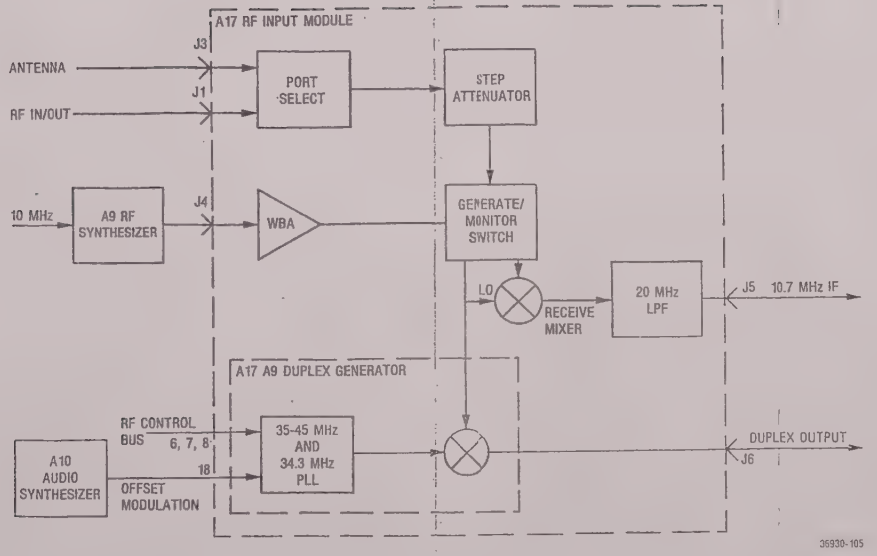


*Figure 2-6. Duplex Generator – Block Diagram*

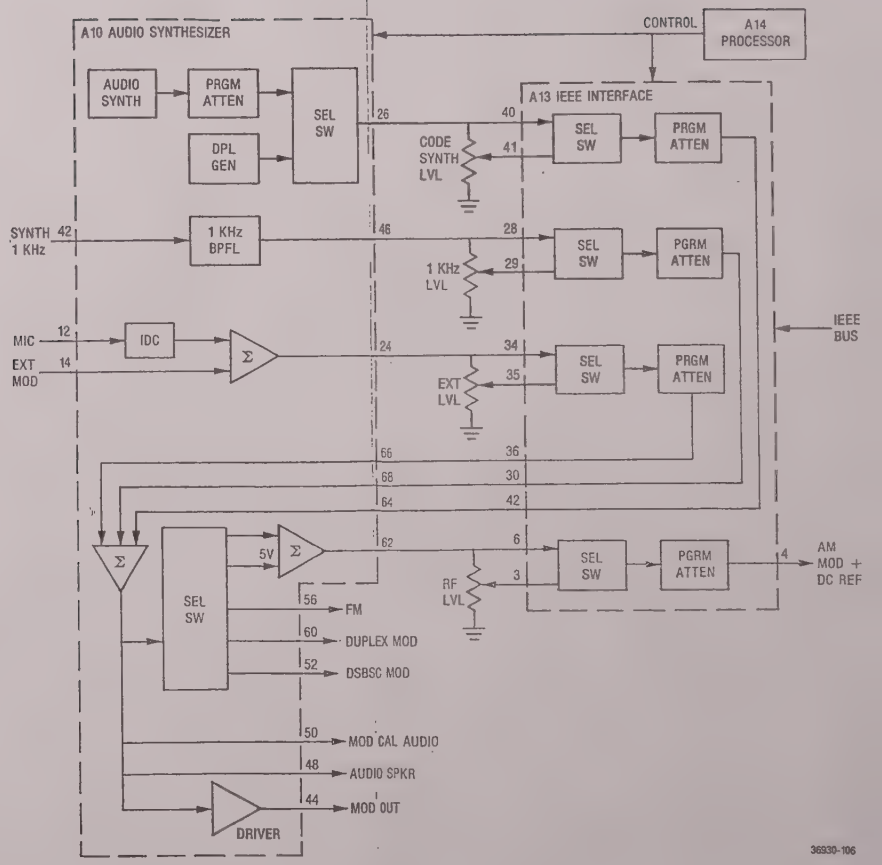


*Figure 2-7. Code Synthesizer – Block Diagram*

FREQUENCY COUNTER

*Figure 2-8. Block Diagram*

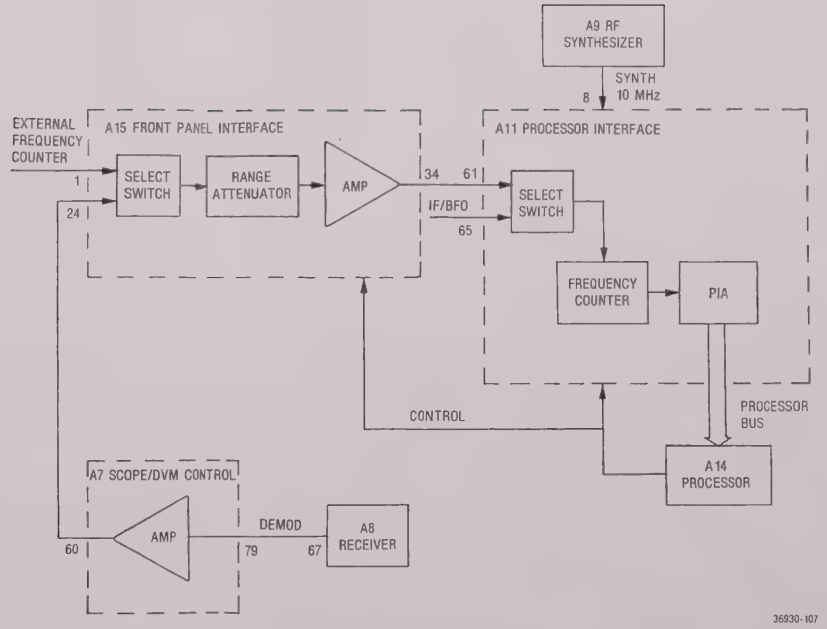

*Figure 2-9. Block Diagram*

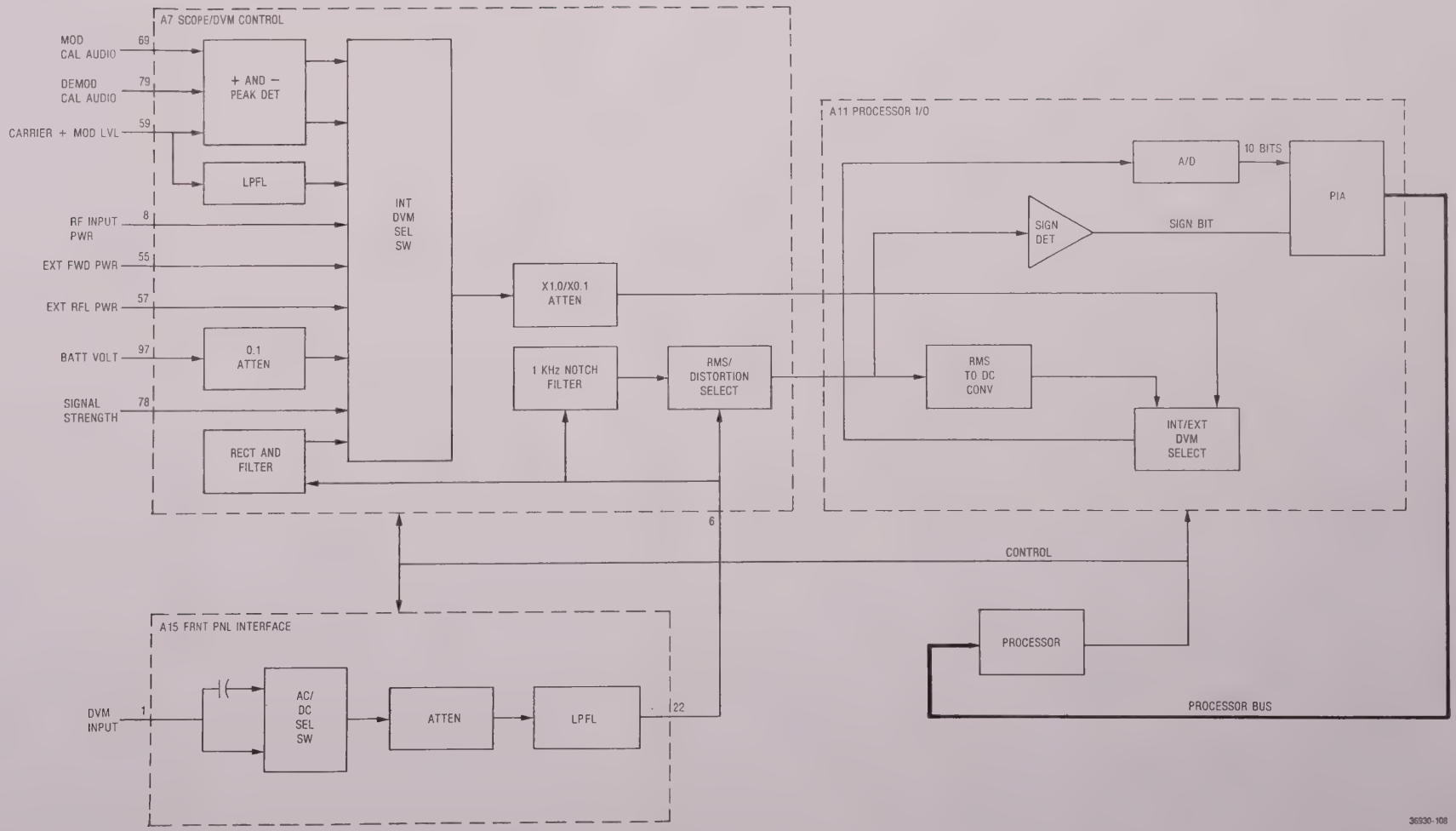

*Figure 2-10. Block Diagram*

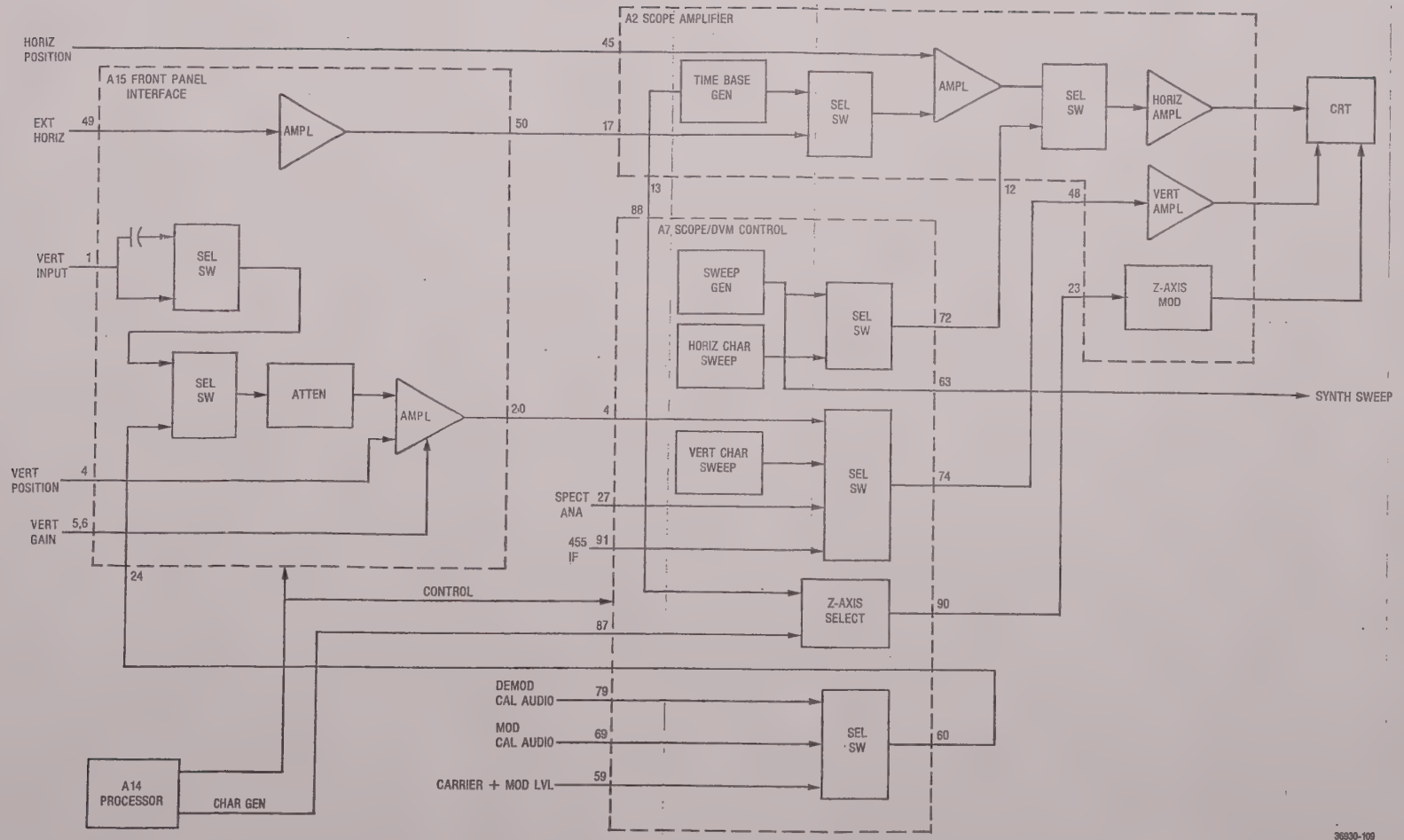

# SECTION 3.
# ALIGNMENT PROCEDURE

## 3.1 INTRODUCTION

This section provides a basic (paragraph 3.2) and an extended (paragraph 3.3) alignment procedure. The basic procedure, which should accompany any service work, requires only a calibrated oscilloscope. The extended procedure, which should be performed at nominal six-month intervals, requires the oscilloscope, module extenders, a calibrated digital voltmeter and other equipment as listed in Table 3-2. All adjustments not covered in this procedure should be performed on suitable module test fixtures only.

### 3.1.1 TEST EQUIPMENT REQUIRED

The basic procedure requires the test equipment listed in Table 3-1. The additional equipment required for the extended procedure is listed in Table 3-2.

Table 3-1. Basic Test Equipment Required

| Description | Model |
|---|---|
| *Oscilloscope<br>Test-Point Shorting Jumper<br>Nonmetallic Alignment Tool | Motorola R1004A |

*An R2001 is a suitable substitute.

Table 3-2. Extended Test Equipment Required

| Description | Model |
|---|---|
| *Oscilloscope | Motorola R1004A |
| *Digital Voltmeter | Motorola R1001A |
| *RF Signal Generator | Motorola R1201A |
| *Modulation Meter | Boonton 82AD |
| Audio Generator | Motorola S1067 |
| Receiver Test Cover | Motorola |
| Extender Card Set | Motorola |

*An R2001 is a suitable substitute for these separate equipments.

### 3.1.2 PREPARATION FOR ALIGNMENT

1. Perform all alignments at normal ambient temperature.
2. Remove the top cover of the unit to be aligned.
3. Turn on the unit to be aligned, allowing a warmup time of 15 minutes before starting alignment.

## 3.2 BASIC ALIGNMENT PROCEDURE

### 3.2.1 LOW VOLTAGE SUPPLY

1. Remove low voltage power supply cover and turn on System Analyzer.
2. Connect a DVM to test point TP5 on the Output board A5.
3. Adjust R6 on the Control board, A4, (Figure 3-1) for a DVM reading a TP5 (A5) of +5.2 Vdc ±0.1 Vdc.

### 3.2.2 CRT INTENSITY BIAS

1. Select Scope DC display and Ext Horiz input mode on the System Analyzer. Set the Intensity control fully counter clockwise.

***CAUTION***

*Do not let a dot stay in one place on the CRT screen for more than 30 seconds because it will leave a permanent burn in the phosphor.*

2. Adjust the Intensity Bias potentiometer on the Scope Amplifier board (Figure 3-2) until a dot appears on the screen. You may have to use the Vertical and Horizontal position control (Vert, Horiz) on the front panel to bring the dot onto the screen. Then back off the Intensity Bias potentiometer until the dot just disappears.

### 3.2.3 CRT INTENSITY BALANCE

1. Select Scope DC display and a horizontal sweep rate of 1 mSec/Div on the System Analyzer. Set the horizontal timebase vernier to calibrate (Cal) and adjust the Intensity control for a barely visible horizontal line on the CRT.
2. Adjust the Intensity Balance potentiometer (Figure 3-2) for uniform intensity of the horizontal trace from left to right. The Balance potentiometer affects the intensity on the left side of the trace.

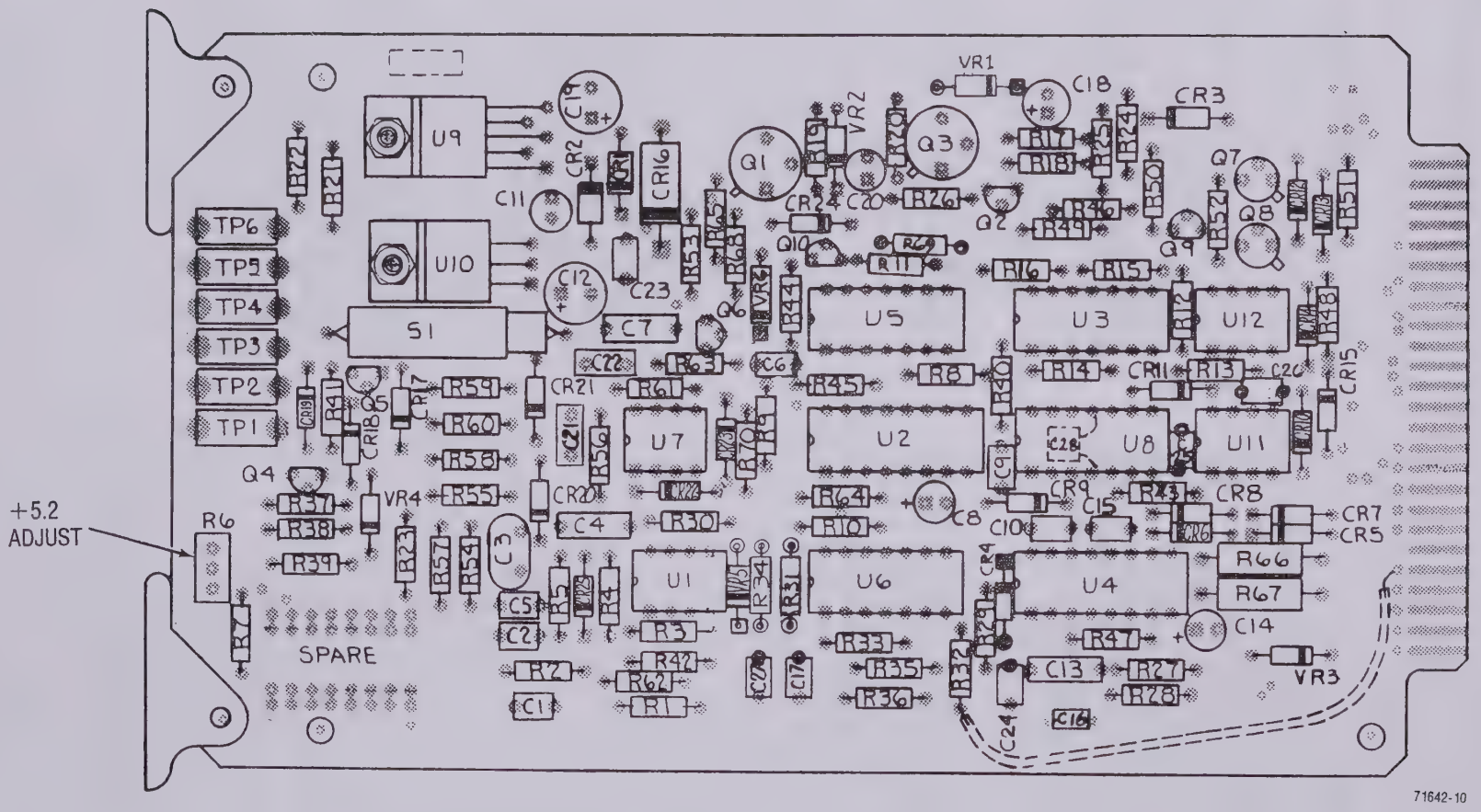


*Figure 3-1. Control Board (A4) – Alignment Points*

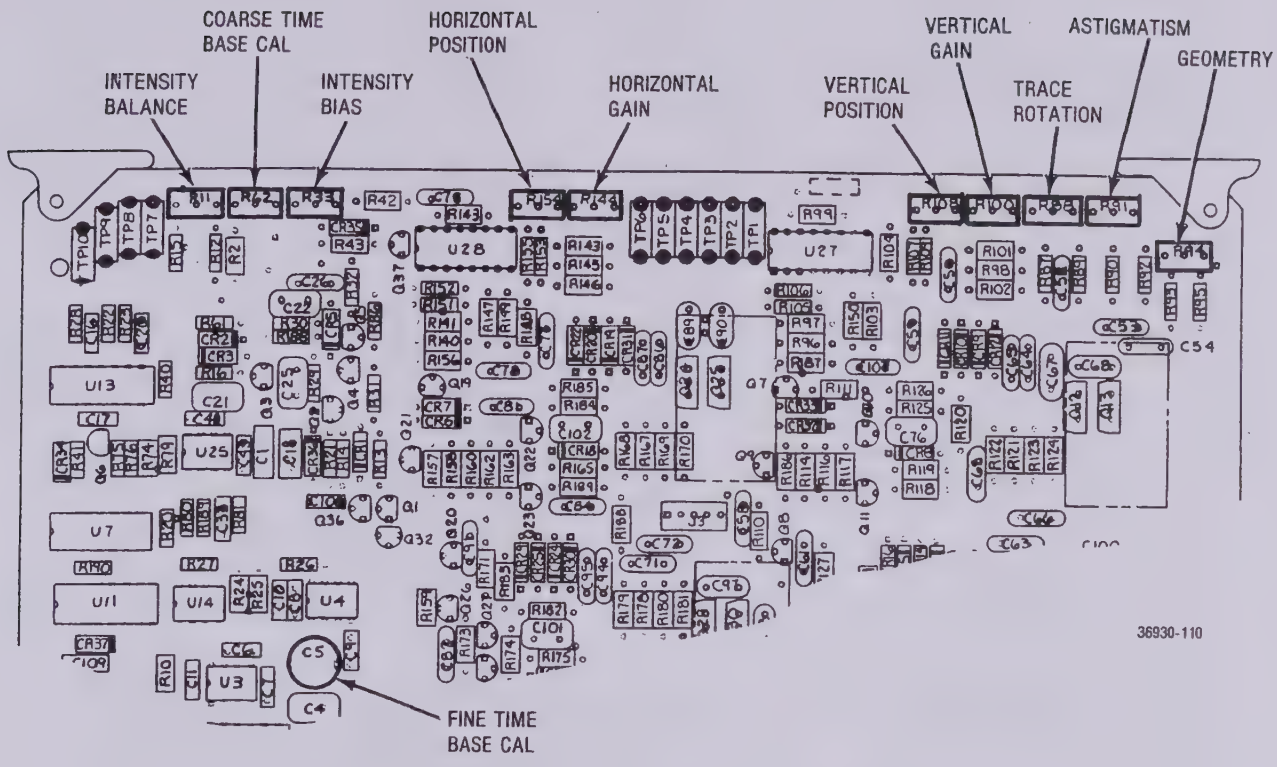


*Figure 3-2. Scope Amplifier Board (A2) – Alignment Points*

### 3.2.4 CRT ASTIGMATISM AND GEOMETRY

1. Select Monitor function and Gen/Mon Mtr display on the System Analyzer. Set the Intensity control for a medium-intense display.
2. While using the Focus control to maintain a focused display at the center of the CRT, adjust the Astigmatism and Geometry potentiometers (Figure 3-2) for the best focus at the outer edges of the CRT with minimum pincushion and barrel distortion of the display. The two adjustments are interactive; to get the best display, alternate repeated small adjustments between the two potentiometers.

### 3.2.5 CRT VERTICAL CENTERING AND TRACE ROTATION

1. Select Gen/Mon Mtr display. Adjust the Intensity control for a comfortable viewing brightness.
2. With the Test-Point Shorting Jumper, connect TP1 of the Scope Amplifier board (Figure 3-2) to chassis ground.
3. Adjust the Trace Rotation potentiometer (Figure 3-2) to make the horizontal trace on the CRT perpendicular to the graticule center line.
4. Adjust the Vertical Position potentiometer (Figure 3-2) so that the horizontal trace on the CRT passes through the graticule center point.
5. Adjust the Trace Rotation potentiometer (Figure 3-2) to align the horizontal trace on the CRT behind the horizontal graticule line.
6. Remove the jumper from TP1.

### 3.2.6 CRT HORIZONTAL CENTERING

1. Select Gen/Mon Mtr display. Adjust the Intensity control for a comfortable viewing brightness.
2. With the Test-Point Shorting Jumper, connect TP6 of the Scope Amplifier board (Figure 3-2) to chassis ground.
3. Adjust the Horizontal Position potentiometer (Figure 3-2) so that the vertical trace on the CRT passes through the graticule center point.
4. Remove the jumper from TP6.

### 3.2.7 CRT HORIZONTAL GAIN

1. Connect the Mod Out port to the Ext Horiz port on the System Analyzer's front panel.
2. Select Generate FM function and Scope DC display. Set the Horiz control for external horizontal

input (Ext). Turn the Code Synthesizer and the Ext Level control OFF, and the 1 KHz Level control up about half way.

3. Connect an oscilloscope with a calibrated vertical input to TP6 on the Scope Amplifier board (Figure 3-2).
4. Using the front panel's horizontal vernier control, adjust for a 3 Vp-p amplitude on the sinewave at TP6.
5. With 3 Vp-p at TP6, adjust the Horizontal Gain potentiometer (Figure 3-2) for a CRT horizontal trace of 6 cm. (Use the front panel controls to position the trace at a convenient place near the center of the CRT.)

### 3.2.8 CRT VERTICAL GAIN

1. Connect the Mod Out port to the vertical input port (Vert In) on the System Analyzer's front panel.
2. Select Generate FM function and Scope DC display. Set the Horiz control for a sweep rate of 1 mSec/Div and the horizontal vernier to Cal. Set the Vert control for an input sensitivity of 1V/Div and the vertical vernier to Cal.
3. Turn the Code Synthesizer and the Ext Level control OFF, and the 1 KHz Level control up about half way.
4. Connect an oscilloscope with a calibrated vertical input to TP1 on the Scope Amplifier board (Figure 3-2).
5. Using the 1 KHz Level control on the front panel, adjust for a 3 Vp-p amplitude on the sinewave at TP1.
6. With 3 Vp-p at TP1, adjust the Vertical Gai potentiometer (Figure 3-2) for a 6-cm p-p sine wave on the CRT. (Use the front panel's Horiz and Vert position controls to center the waveform on the CRT.)

### 3.2.9 VERTICAL INPUT GAIN

1. Select Generate FM function and Scope DC display. Set the Horiz control for a sweep rate of 1 mSec/Div and the horizontal vernier to Cal. Set the Vert control for an input sensitivity of 1V/Div, and the vertical vernier to Cal.
2. Connect an oscilloscope with a calibrated vertical input to the Mod Out port on the front panel.
3. Turn the Code Synthesizer and the Ext Level control OFF and adjust the 1 KHz Level control for a 6 Vp-p sinewave on the attached oscilloscope.
4. Disconnect the oscilloscope from the Mod Out port and connect the Mod Out port to the Vert input port.
5. Adjust the Input Vertical Gain potentiometer on the Front-Panel Interface board (Figure 3-3) for a 6-cm p-p sinewave on the CRT. (Use the front panel's Horiz and Vert position controls to center the waveform on the CRT.)

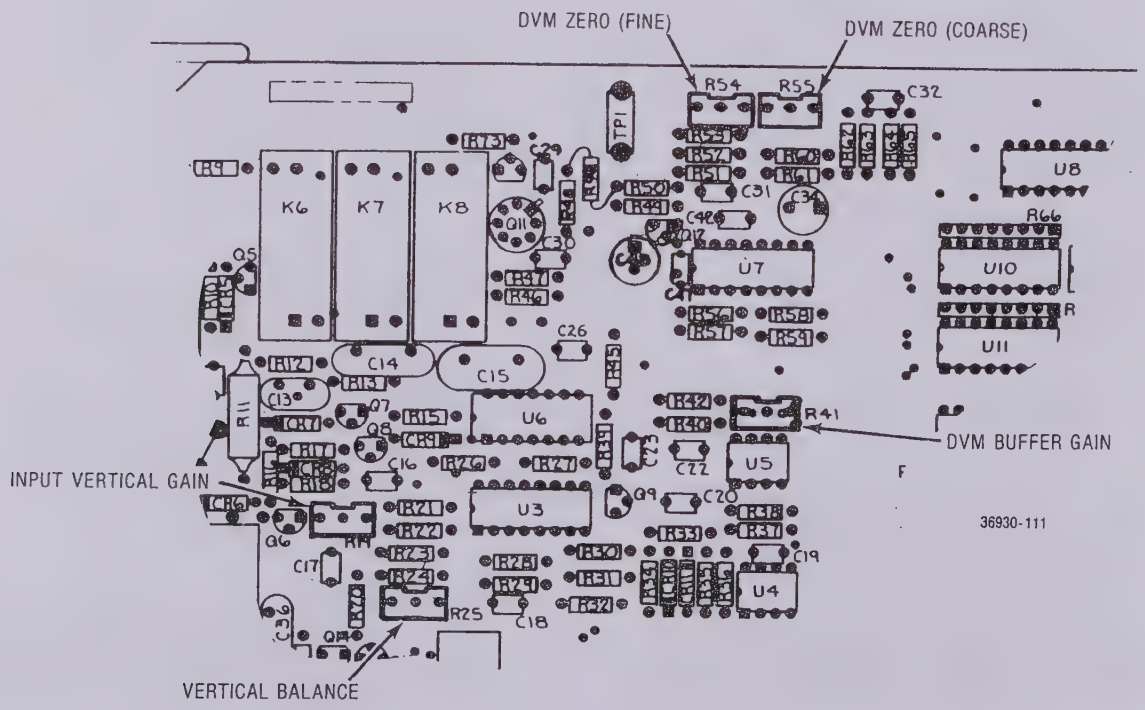


*Figure 3-3. Front Panel Interface Board (A15) – Alignment Points*

### 3.2.10 DVM ZERO

1. Select DVM display and DC mode.
2. Short the center conductor of the DVM input port (DVM In) to ground.
3. Adjust the Coarse DVM Zero and the Fine DVM Zero potentiometers on the Front-Panel Interface board (Figure 3-3) for a zero reading on the DVM display.

### 3.2.11 CHARACTER GENERATOR

1. Select Monitor FM function and Gen/Mon Mtr display.
2. Adjust the Horizontal Character-Sweep-Width potentiometer on the Scope/DVM Control board (Figure 3-4) so that the right-hand edge of the CRT character display is approximately 4.2 graticule divisions to the right of the graticule center line.
3. Adjust the Vertical Character-Sweep-Width potentiometer on the Scope/DVM Control board (Figure 3-4) so that the bottom edge of the CRT display is approximately 3.3 graticule divisions below the graticule center line.

### 3.2.12 SPECTRUM ANALYZER CENTERING

1. Select Spect Analyzer display. Set the dispersion control (Dispr) on the front panel to 1 MHz (fully counter clockwise). Set the center frequency of the Analyzer to 10.0 MHz.
2. Connect the 10 MHz STD port on the rear panel to the RF In/Out port on the front panel. Set the RF step attenuator (Step) to obtain a convenient spectral display.

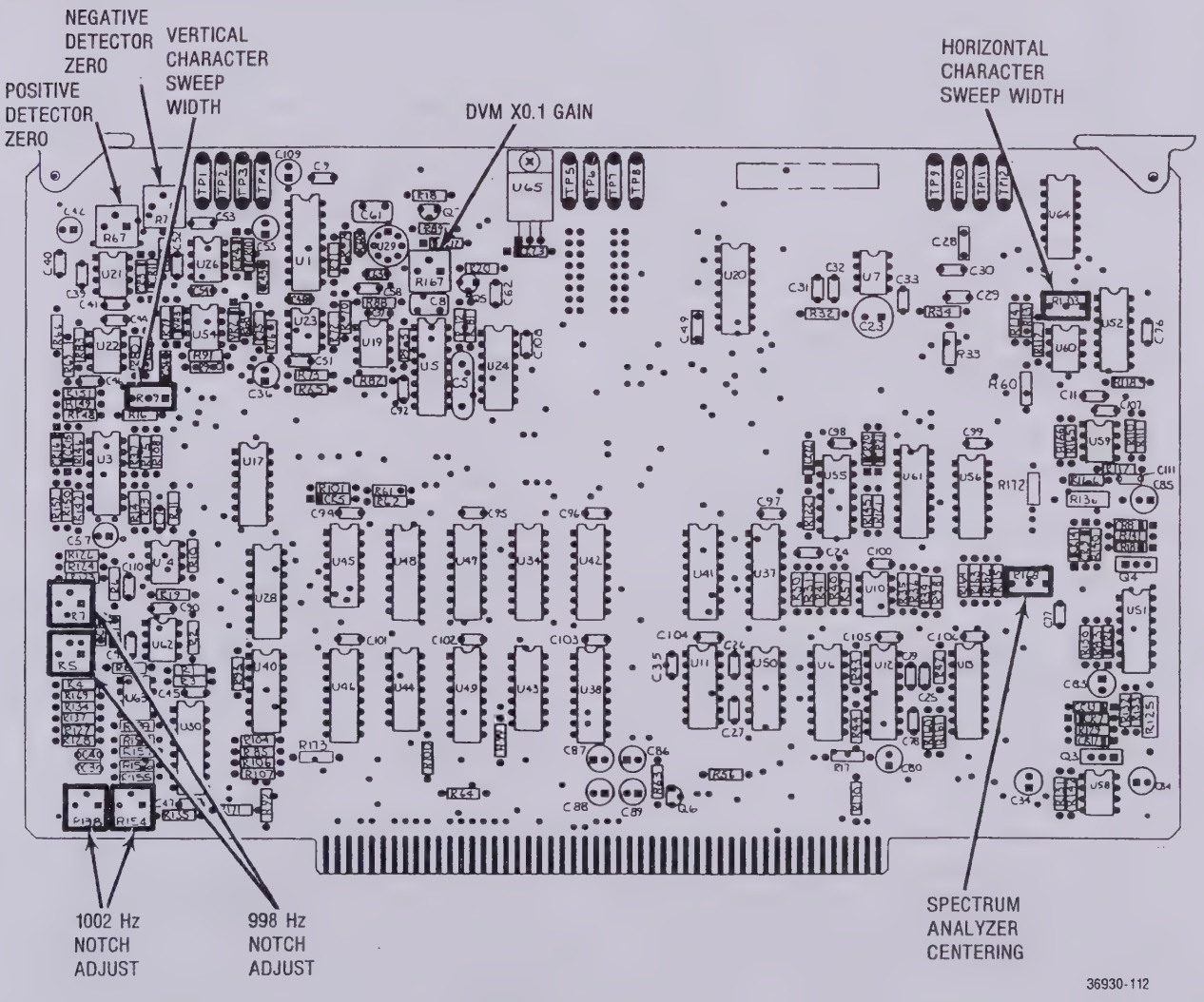


*Figure 3-4. Scope/DVM Control Board (A7) – Alignment Points*

3. Adjust the Spectrum Analyzer Centering potentiometer on the Scope/DVM Control board (Figure 3-4) so that the spectral line on the CRT is centered about the center graticule line.

### 3.2.13 HORIZONTAL TIMEBASE

1. Select Generate FM function and Signaling Sequence (Seq) display. Select A/B encode, and program Tone A for 20.0 Hz, and Tone B for 19,999.9 Hz.
2. Select Modulation display. Set the Oscilloscope controls for a vertical range of 2.5 kHz/Div, Auto Trigger, and a horizontal sweep rate of 10 mSec/Div. Set the horizontal and vertical vernier controls to Cal.
3. Set the Code Synthesizer for continuous (Cont) Tone A, and turn up the Code Synthesizer level control (Code Synth Lvl) to obtain a nearly full-scale sinusoidal waveform on the CRT. Turn the Ext Level and the 1 KHz Level controls OFF.
4. Adjust the Coarse Timebase Calibration potentiometer on the Scope Amplifier board (Figure 3-2) so that one cycle of the displayed waveform occurs in 5 cm along the horizontal axis. Use the Vert and Horiz position controls to center and move the waveform; this will measure the 5 cm in the middle of the screen and avoid nonlinearities near the edge of the CRT.
5. Set the Oscilloscope Horiz control for a sweep rate of 10 μSec/Div and select Tone B output on the Code Synthesizer.
6. Adjust the Fine Timebase Calibration capacitor on the Scope Amplifier board (Figure 3-2) so that one cycle of the displayed waveform occurs in 5 cm along the horizontal axis. As with coarse timebase calibration, use the Vert and Horiz position controls to center and move the waveform.

## 3.3 EXTENDED ALIGNMENT PROCEDURE

### 3.3.1 DVM

Perform 3.1.2 preparation for alignment and 3.2 basic alignment procedure before proceeding to any of the extended alignment procedure.

#### 3.3.1.1 Peak Detector Zero

***NOTE***

Do not attempt to make a peak detector alignment with any boards on extender cards. The Receiver Board (A8) may be removed to make access to adjustments.

1. Select generate FM Narrowband function and turn the code synthesizer, External level control, and 1 KHz level control OFF.
2. Connect an external DVM to TP4 on the Scope/DVM Control board (see Figure 3-4).
3. Adjust the positive detector zero (R67) for a DVM reading of 0.000 ± 0.0009 Vdc at TP4.
4. Connect the external DVM to TP6 on the Scope/DVM Control board.
5. Adjust the negative detector zero (R78) for a DVM reading of 0.000 ± 0.0009 Vdc at TP6.

#### 3.3.1.2 DVM X0.1 Gain

1. Select generate FM Narrowband function and Gen/Mon Mtr display.
2. Connect an external DVM to test point TP6 on the Scope/DVM Control board (see(Figure 3-4).
3. Turn on the 1 kHz internal modulation and adjust the level until the voltage at TP6 reads 2.000 Vdc.

***NOTE***

Because the internal DVM is continuously multiplexed through nine internal voltage points, the microprocessor must be halted to make the DVM X0.1 Gain adjustment. The microprocessor must be halted on the negative detector cycle. A number of halt attempts may have to be made.

4. Connect a DVM to test point TP5 on the Scope/DVM control board.
5. To halt the microprocessor short test point TP6 on the Processor board to ground. Once the microprocessor has been halted measure the voltage at TP5. The voltage should be 0.2V, approximately X0.1 the voltage at TP6. If the voltage at TP5 is not approximately X0.1 the voltage of TP6 restart and halt the microprocessor until it is.
6. Now that the microprocessor is halted in the negative detector position, adjust R167 (See Figure 3-4) so that the voltage reading at TP5 is equal to X0.1 the voltage at TP6 to four significant figures. (Example TP6 = 2.000 Vdc, TP5 = 0.2000 Vdc.)

#### 3.3.1.3 DVM

***NOTE***

Do not attempt to make the DVM alignment with any boards on extender cards.

1. Select DVM/DIST display and DC Volts mode. Short the center conductor of the front panel's DVM input port (DVM In) to ground. Connect an external DVM between TP2 and TP90 on the Scope/DVM Control board (Figure 3-4).
2. Adjust the Coarse DVM Zero and the Fine DVM Zero potentiometers on the Front-Panel Interface board (Figure 3-3) until the external DVM reads 0 ± 0.5 mVdc.
3. Remove the short-circuit on the DVM input port and apply approximately 0.900 Vdc from an external power supply. The voltage between TP2 and TP9 of the Scope/DVM Control board should be within ±1 mV of the voltage at the front panel's DVM input port. If the unit fails this test, adjust the DVM Buffer Gain on the Front Panel Interface board (Figure 3-3) until the two voltages are equal.
4. Select Generate FM Narrowband mode and Gen/Mon Mtr display, and turn the MODULATION switch to OFF.
5. Short TP4 to TP9 on the Scope/DVM Control board (Figure 3-4).
6. Adjust the A/D Offset on the Processor Interface board (Figure 3-5) until the plus-peak-deviation reading on the CRT is just toggling between 0.00 and 0.01 kHz. The slightly turn the adjustment to maintain a constant 0.00 reading. Note that if the offset adjustment is turned past this point, the deviation reading is still 0.00, but the A/D converter is not aligned properly.
7. Remove the short-circuit between TP4 and TP9, and connect the positive lead of the external DVM to TP4 of the Scope/DVM Control board (Figure 3-4). Place the negative lead on the ground plane or TP9 of the Scope/DVM Control board.
8. Turn on the 1-kHz internal modulation and adjust the level until the voltage at TP4 reads 0.900 Vdc.
9. Adjust the A/D Gain (Figure 3-5) until the reading on the positive deviation peak is 4.50 kHz.
10. Select DVM DC mode.
11. With the center conductor of the front panel's DVM input port again shorted to ground, adjust the RMS-Converter Offset on the Processor Interface board (Figure 3-5) for a reading of 0.000V on the CRT DVM display.
12. Adjust the Sign Detector Offset (Figure 3-5) until the sign of the 0.000V reading is just flashing between plus and minus.
13. Remove the short and apply approximately 0.900 Vdc to the front panel's DVM input port.
14. While monitoring the input voltage on an external DVM, adjust the RMS-Converter Gain on the Processor Interface Board (Figure 3-5) until the CRT DVM reading equals the external voltage applied.

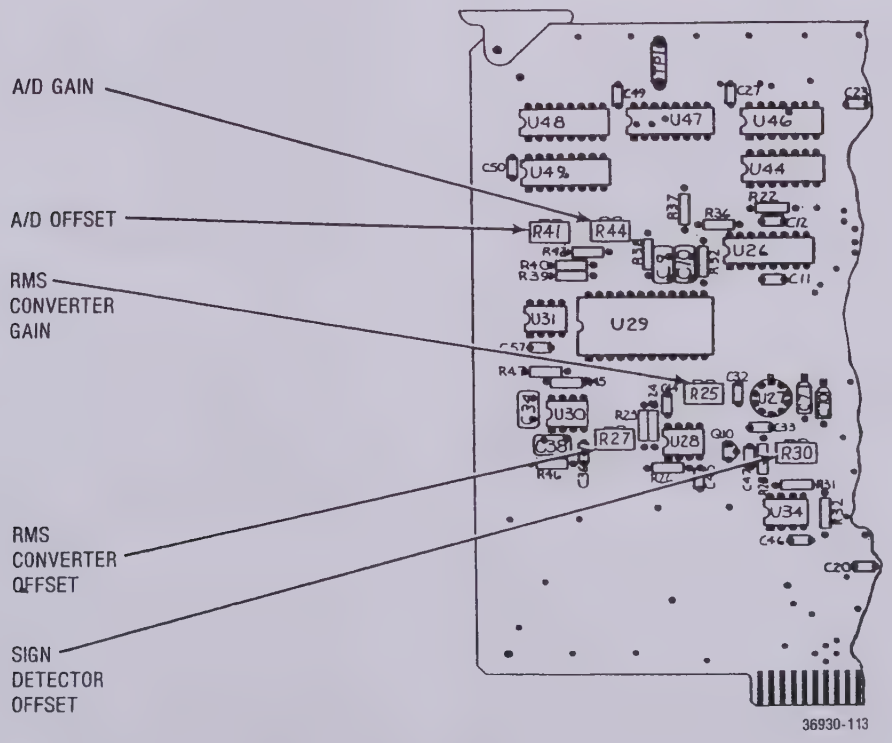


*Figure 3-5. Processor Interface Board (A11) – Alignment Points*

### 3.3.2 DISTORTION/SINAD ALIGNMENT

1. Select Generate function and Gen/Mon Mtr display. Using an audio generator with less than 0.1% distortion, apply a 900 mVrms, 1-kHz ± 2 Hz signal to the Vert/SINAD/DVM/Dist/Counter input port on the front panel.
2. Verify that the distortion reading on the CRT is ≤0.5%. If this test fails, align the notch filter.
3. Turn the System Analyzer OFF and extend the Scope/DVM Control board using the 100-pin extender card.
4. Turn the System Analyzer ON and select Generate FM function and Gen/Mon Mtr display.
5. Using the same low-distortion generator as in step 1, apply a 998 ± 0.2-Hz sinewave to the distortion input port (Dist In).
6. Alternately adjust the 998-Hz notch potentiometers on the Scope/DVM Control board (Figure 3-4) to null the distortion reading on the CRT. You should get a reading of less than 0.5%.
7. Change the audio generator's input frequency to 1002 ± 0.2 Hz.
8. Alternately adjust the 1002-Hz notch potentiometers on the Scope/DVM Control board (Figure 3-4) to again null the CRT distortion reading. You should again get a reading of less than 0.5%.
9. Turn the system's power OFF and put the Scope/DVM Control board back into the system chassis.

### 3.3.3 RECEIVER

#### 3.3.3.1 Linear IF

1. Perform the basic alignment procedure of paragraph 3.2.
2. Turn the System Analyzer OFF and remove the Receiver board. Remove the Receiver board cover, install the Receiver Test Cover on the board, and insert the Receiver board into the appropriate extender card. Place the Receiver and extender assembly in the Receiver board's edge connector.
3. Turn the Analyzer ON and select Monitor AM function and Distortion display. Set the monitor frequency to 250 MHz, the RF step attenuator (Step) to 0 dB, the IF bandwidth switch (BW) to Wide, and the Receiver audio filter to 300-Hz HPFL and 3-kHz LPFL.
4. Connect the external signal generator to the Antenna port on the front panel. Adjust the external generator for an output level of approximately −80 dBm and a calibrated, 30 percent AM, 1-kHz tone at 250 MHz.
5. Connect the Demod Out port to the distortion input port (Dist In) on the front panel.
6. Adjust C307 and C320 (marked on the Receiver Test Cover) for lowest distortion; adjust the signal strength of the generator as needed.
7. Select Narrowband FM mode.
8. Adjust the external generator for an output level of approximately −40 dBm and a calibrated, 3-kHz FM, 1-kHz tone.
9. Adjust C327, C328 and C320 (marked on the Receiver Test Cover) for lowest distortion.

#### 3.3.3.2 AM/AGC Calibration

1. Select Monitor AM function and Gen/Mon Mtr display. Set the monitor frequency to 250 MHz, the RF step attenuator to 0 dB, and the BW switch to Narrow.
2. Connect the external generator to the Antenna port on the front panel. Adjust the external generator for an output level of −50 dBm and a calibrated 40 percent AM at 250 MHz.
3. Adjust R359 (marked on the Receiver Test Cover) for a reading of 40% ± 5% on the CRT AM display.
4. Adjust R398 for the increase RF attenuator setting warning to just flash on the CRT.
5. Repeat steps 3 and 4 once.

#### 3.3.3.3 FM Calibration

1. Select Monitor FM function and Gen/Mon Mtr display. Set the monitor frequency to 250 MHz, the RF step attenuator to 0 dB, and the BW switch to Wide.
2. Connect the external signal generator to the Antenna port on the front panel. Adjust the external generator for a center frequency of 250 MHz at an output level of approximately −30 dBm and a calibrated 40-kHz FM.
3. Adjust R421 (marked on the Receiver Test Cover) for a reading of 40 kHz ± 2 kHz on the CRT FM display.

#### 3.3.3.4 Spectrum Analyzer

***NOTE***

Unless the factory alignment has been disturbed through repair, do not re-align the Spectrum Analyzer except for offset adjustment (R241B). Because all the adjustments interact, re-aligning the Spectrum Analyzer is difficult.

1. Remove cover from receiver board.
2. Connect a high input impedance frequency counter to pin 8 of U201 on the receiver board (see Figure 3-6).
3. Adjust C236 on the receiver board (see Figure 3-6) for a frequency reading of 10.24 MHz ± 100 Hz.
4. Replace receiver test cover.
5. Select Monitor function and the Spect Analyzer display on the System Analyzer. Set the monitor

frequency to 250 MHz, and the RF step attenuator to 40 dB.

6. Connect the external signal generator to the Antenna port on the front panel. Adjust the external generator for a center frequency of 250 MHz and a calibrated output level of −30 dBm with no modulation.
7. Adjust, in succession, C207, C208, C213 and C218 (marked on the Receiver Test Cover) to maximize the amplitude of the spectral line in the center of the CRT display.
8. Adjust R219, R226 and R229 (marked on the Receiver Test Cover) to obtain a uniform change in the spectral amplitude per 10-dB change of the RF step attenuator. R229 affects the level of the spectral component in the top quarter of the screen, R219 affects levels in the third quarter from the top, and R226 affects levels in the bottom quarter.
9. Adjust R241B for offset and R241A for gain, so that with the step attenuator at 0 dB, the peak of the spectral line lies on the 30-dB line of the CRT, and successive step increases of the input attenuator move the spectral amplitude downward on the CRT in 10-dB increments. The accuracy required for any one step-attenuator position is ±2 dB.
10. To obtain the best possible accuracy, you will generally need to repeat steps 4 and 5 multiple times.
11. For the Cellular Option, connect a calibrated signal of −40 dB at 850 MHz into the Antenna port on the front panel. Adjust R241B for a reading of −40 dBm ± 1 dB on the CRT signal-strength display.
12. Turn the power OFF and remove the Receiver board and extender card from the chassis. Remove the Test Cover from the Receiver board and replace the board cover. Put the board back into the system chassis.

### 3.3.3.5 BFO Centering

1. Select Monitor SSB/BSBSC function, Gen/Mon Mtr display, and turn squelch control off.
2. Adjust C394 (see Figure 3-6) on the Receiver board so that the BFO error frequency control is centered such that both positive and negative BFO error frequencies are equal.

## 3.3.4 RF SYNTHESIZER

### 3.3.4.1 24 MHz VCO

1. Remove the 60.5 MHz Loop Board cover (A9A4).
2. Connect a DVM to the junction of CR11 and R37 on the 60.5 MHz Loop Board (see Figure 3-7).
3. Adjust C46 for a DVM reading of +7.0 ±1 Vdc.

### 3.3.4.2 Phase Shift

***NOTE***

Unless the factory alignment has been disturbed through repair no adjustment should be made.

1. Remove the GHz Loop cover (A9A5).
2. Connect an audio generator through an external resistor (R ⩾ 50K ohm) to the junction of R12 and C10 on the GHz Loop board (see Figure 3-8).
3. Connect an oscilloscope to the lock detector output, junction of R51 and C35 (see Figure 3-8).
4. Place the RF synthesizer on the appropriate extender card and turn the System Analyzer ON.
5. Select Generate FM function and Gen/Mon Mtr display. Set the Generate FM frequency to 500.0000 MHz.
6. Adjust the audio generator for a 50 Hz sinewave with zero volts dc offset and adjust the variable output control for zero volts ac.
7. With the GHz loop locked increase the output level of generator until a 0.1 Vp-p ac waveform is observed on the oscilloscope.

***NOTE***

If the current summed into the loop filter is too large (i.e. the output level of the audio signal generator is too large) the GHz loop will break lock. If this happens adjust the level of the audio generator back to zero volts ac, until the GHz loop locks. Then gradually increase the level until a 0.1 Vp-p waveform is observed at the lock detector output.

8. If the lock detector is properly phased, the waveform at the lock detector output will be doubled in frequency (100 Hz) and every peak will be equal in amplitude as shown below:

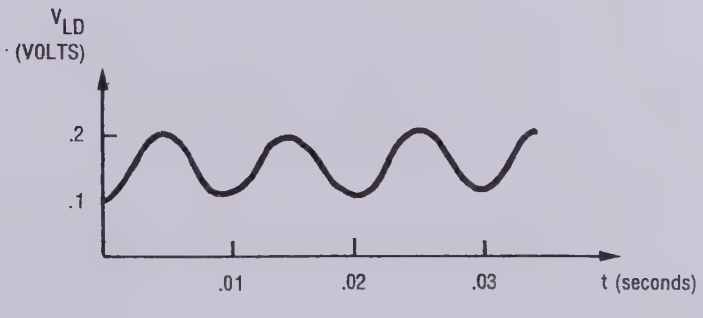

9. If the lock detector is not properly phased, every peak will not be of equal amplitude (see example below). Adjust C24 until the correct waveform above is obtained. If the correct waveform cannot be obtained, select in test a value for C12 that in conjunction with the adjustment of C24 will produce the correct waveform.

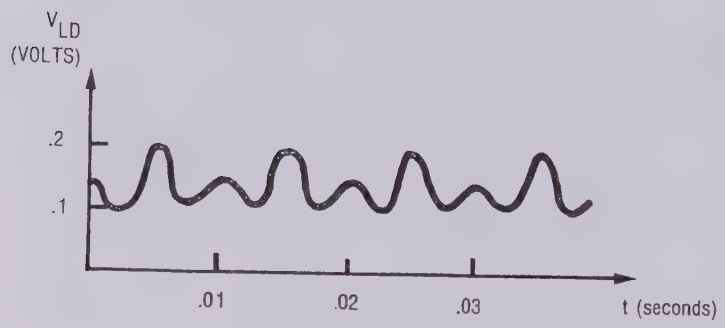


### 3.3.4.3 FM Deviation

1. Select Generate FM function and Gen/Mon Mtr display. Set the generate frequency to 100 MHz.
2. Connect the calibrated external modulation meter to the Antenna port on the front panel. Tune the external modulation meter to 100-MHz FM.
3. Turn on the Modulation 1 KHz Level switch and adjust for a reading of 20 kHz on the CRT generate-deviation display.
4. Adjust R12 through the hole in the RF Synthesizer cover. (First locate R12 by removing the RF Synthesizer cover.) The reading should be 20 kHz ±1 kHz, as measured by the external modulation meter.

### 3.3.5 FREQUENCY STANDARD

### 3.3.5.1 Oven Ready Light

1. Remove System Analyzer bottom cover.

***NOTE***

If the System Analyzer has a temperature compensated crystal oscillator (TCXO) perform alignment 3.3.5.1.1 TCXO. If the system analyzer has an oven controlled crystal oscillator (OCXO) perform alignment 3.3.5.1.2 OCXO.

#### *3.3.5.1.1 TCXO.*

1. Turn System Analyzer ON.
2. Turn R8 (see Figure 3-9) on the frequency Standard Interface board fully clockwise which will turn the oven ready light on the front panel ON.

#### *3.3.5.1.2 OCXO.*

1. Turn System Analyzer on and wait approximately 10-20 minutes until heater input current and frequency stabilize. To monitor the heater input current put a DVM across R11 and R12 (see Figure 3-9) which are in parallel. The warm-up current will be 700 to 900 mA (voltage across R11 and R12 will be 0.35 to 0.45 Vdc). The stabilized current will be 200 to 250 mA (0.1 to 0.13 Vdc).
2. Once the heater input has stabilized, adjust R8 on the frequency Standard Interface board until the oven ready light on the front panel just turns on.
3. Connect an external resistor load from the collector to Q1 to ground to increase the heater input current to 350 mA (0.18 Vdc across R11 and R12). The typical resistor value is 100 ohms, 2 watts. The resistor value required to bring the heater input current to 350 mA may change from unit to unit.
4. With the external load resistor connect, adjust R8 on frequency Standard Interface board until the oven ready light just fully turns ON.
5. Remove load resistor and make sure oven ready light is turned ON.

### 3.3.5.2 Oscillator Level

1. Connect a high input impedance scope probe to the junction of C15 and C17 on the frequency Standard Interface Board (see Figure 3-9).
2. Adjust R18 on the frequency Standard Interface Board for a peak-to-peak voltage between 1 and 2 volts at junction of C15 and C17.

### 3.3.5.3 Oscillator Frequency

1. Connect an external frequency counter, with at least a 1 part in $10^9$ stability reference oscillator, to the 10 MHz STD output on the system analyzer's back panel.
2. Remove the timebase – calibration cover screw on the lower left side of the System Analyzer.
3. Turn on System Analyzer and allow to warm up. Ten minutes for a TCXO or 20 minutes for a OCXO until oven ready light comes on.
4. Using an appropriate non-metallic tuning tool, adjust the timebase oscillator for a counter reading of 10 MHz ± 1 Hz.

***NOTE***

If a National Bureau of Standards radio station is receivable the following procedure can be performed.

1. Remove the timebase-calibration cover screw on the lower left side of the System Analyzer.
2. Allow the Analyzer to warm up for at least 20 minutes.
3. Select Monitor AM function and Gen/Mon Mtr display. Set the monitor frequency to one of the National Bureau of Standards radio stations (5, 10, 15, or 20 MHz), and use a suitable antenna for these frequencies.
4. Adjust the timebase for a reading of 0 Hz ± 1 Hz on the CRT monitor frequency-error display.

### 3.3.6 DUPLEX GENERATOR

1. Remove the bottom cover of the System Analyzer and the Duplex Generator cover.
2. Select Generate FM function and Duplex Gen display. Set the DUPLEX GEN switch to ON, the Duplex monitor frequency to 145 MHz, the offset frequency to 45 MHz, and the Image/Dplx switch to Low.
3. Adjust C68 on the Duplex Generator board (Figure 3-10) for 8 to 10V, as measured at TP 1.
4. Connect the calibrated external modulation meter to the DUPLEX GEN Output port on the front panel. Tune the external modulation meter to 100-MHz FM.
5. Turn on the Modulation 1 KHz Level switch and adjust for a reading of 20 kHz on the CRT generate-deviation display.
6. Adjust R69 on the Duplex Generator board (Figure 3-10)for a reading of 20 kHz ± 1 kHz, as measured by the external modulation meter.
7. Set the Duplex offset frequency to 0 Hz Select Monitor FM function and Gen/Mon Mtr display.
8. Connect the DUPLEX GEN Output port to the Antenna port on the front panel.
9. Adjust C40 on the Duplex Generator board (Figure 3-10)for a reading of 0Hz ± 50 Hz on the CRT monitor frequency-error display.

### 3.3.7 WIDEBAND AMPLIFIER

***NOTE***

Perform extended alignment procedures 3.3.1A Peak Detector Zero and 3.3.1C DVM before making the following alignment.

1. Remove the RF input module (A17) from the system analyzer and remove the wideband amplifier cover from the RF input module. Reconnect the ribbon cable connector and the coax cable coming from the RF synthesizer module (A9) to the A17 module.
2. Select the Generate FM function, Gen/Mon Mtr display, and turn all modulation OFF. Set the Generate Frequency to 500.0000 MHz.
3. Select the Antenna Port and set the step attenuator to the 0 dB position.
4. Connect a calibrated wattmeter (HP4364) to the Antenna Port.
5. Adjust the RF variable level control on the front panel for a reading of 10.00 dBm on the external wattmeter.
6. Adjust R34 (OFFSET) on the wideband Amplifier board (see Figure 3-11) for a reading of 10.0 dBm ± 0.2 dBm on the CRT RF level display.
7. Adjust the RF variable level control on the front panel for a reading of 1.00 dBm on the external wattmeter.
8. Adjust R38 (GAIN) on the wideband Amplifier board for a reading of 1.0 dBm ± 0.2 dBm on the CRT RF level display.

***NOTE***

Due to the interaction between the two adjustments the procedure must be repeated a number of times.

9. Repeat steps 5-8 until no adjustment of R34 and R38 is required to obtain the 10.0 dBm and 1.0 dBm readings on the CRT RF level display.

### 3.3.8 WATTMETER

1. Remove System Analyzer bottom cover and wattmeter (A17A1) cover.
2. Select monitor function and Gen/Mon Mtr display.
3. Set the step attenuator on the front panel to the 10 dB position and select the RF IN/OUT port.
4. Set the Offset (R20) and Gain (R7) pots in the halfway position.
5. Connect a calibrated 1 watt 500 MHz generator, using a 600 MHz low-pass filter to filter out second harmonic, to the RF IN/OUT port.
6. Adjust the OFFSET (R20) pot on the wattmeter board (see Figure 3-12) for an input level reading of 1 watt on the CRT display.
7. Connect a calibrated 50 watt 500 MHz (again use a 600 MHz L-PF to the RF IN/OUT port).
8. Adjust the gain (R7) pot for an input level ready of 50 watts on the CRT display of 50 watts.

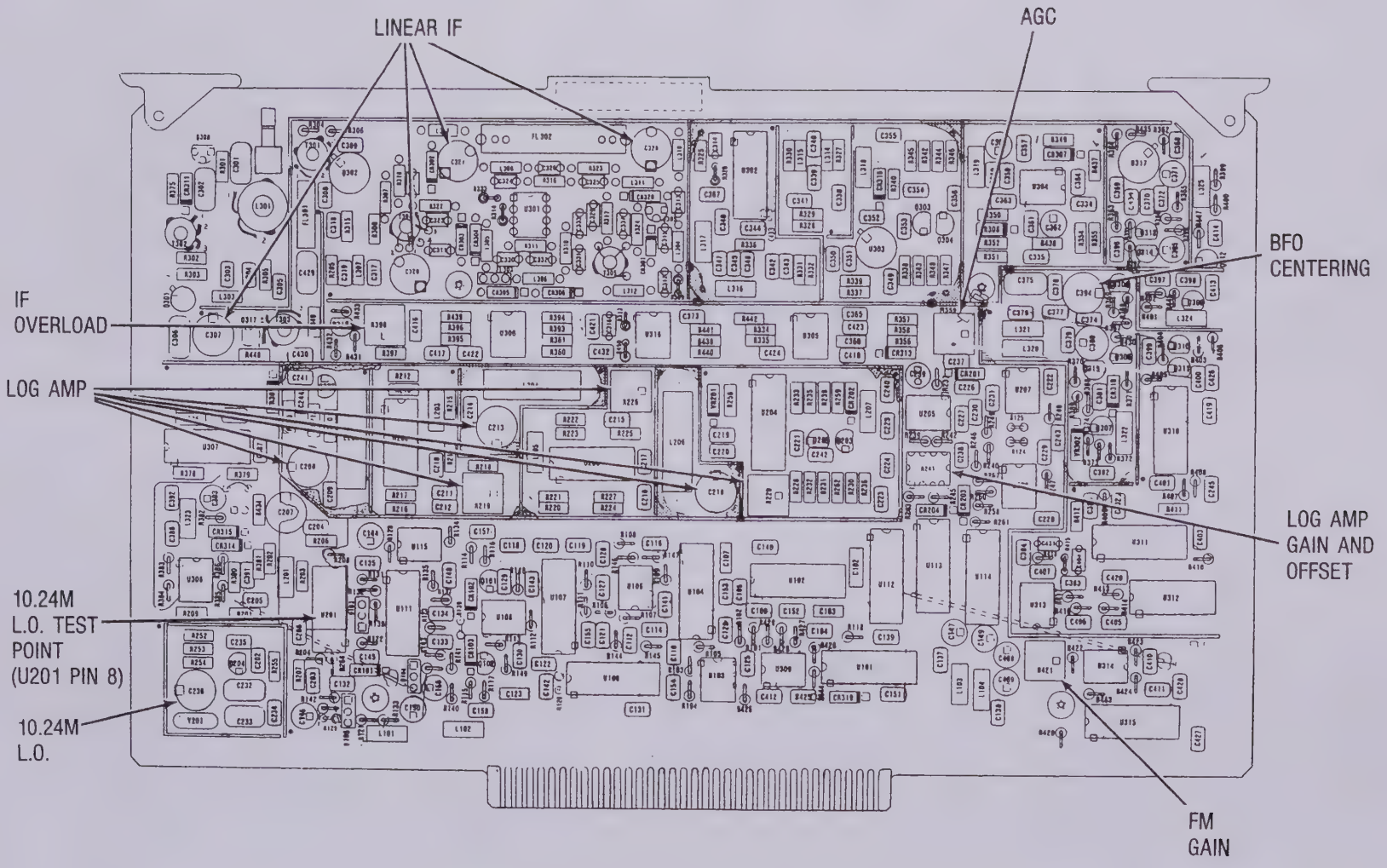


*Figure 3-6. Receiver Board (A8) – Alignment Points*

71642-11

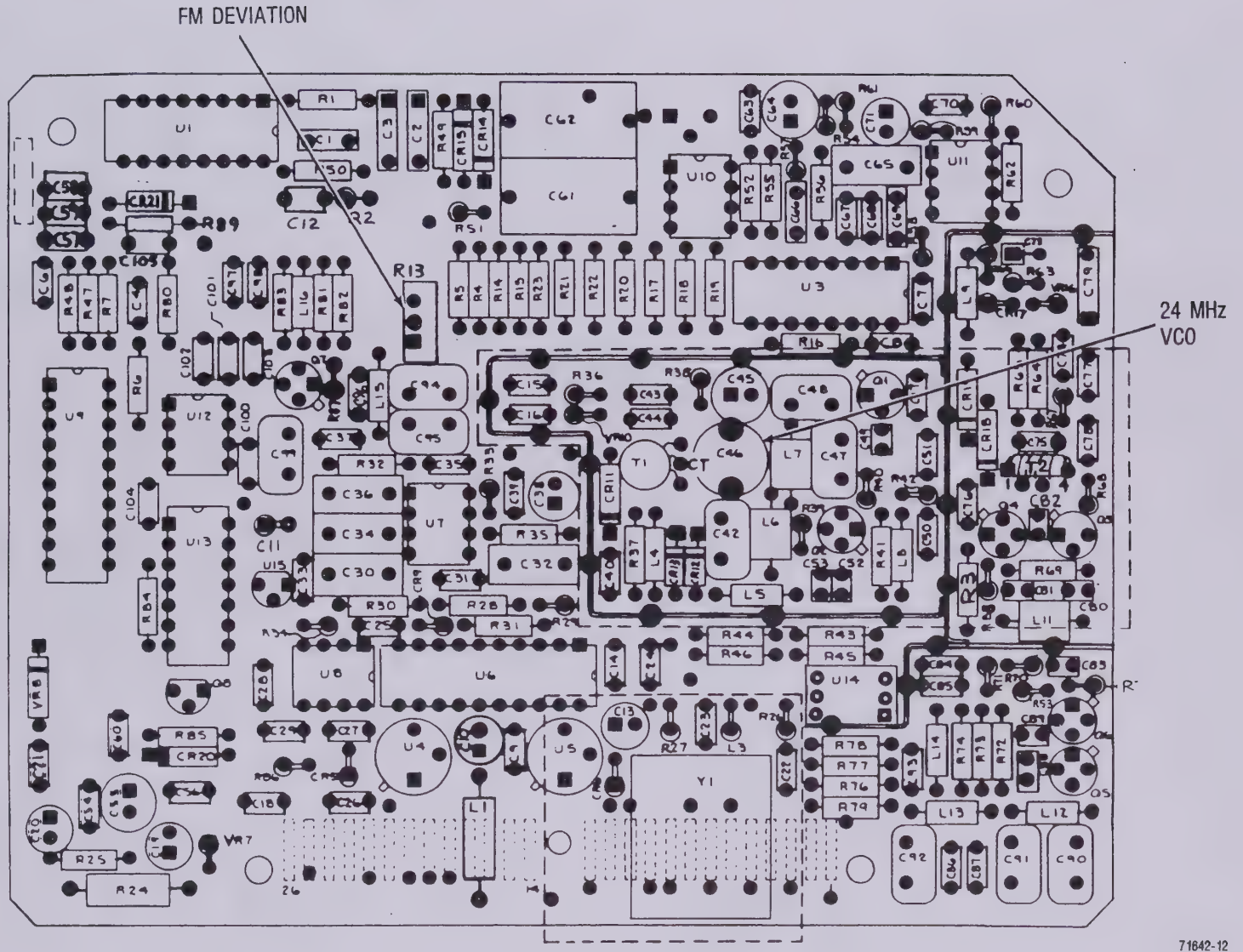


*Figure 3-7. 60.5 MHz Loop Board (A9A4) Alignment Points*

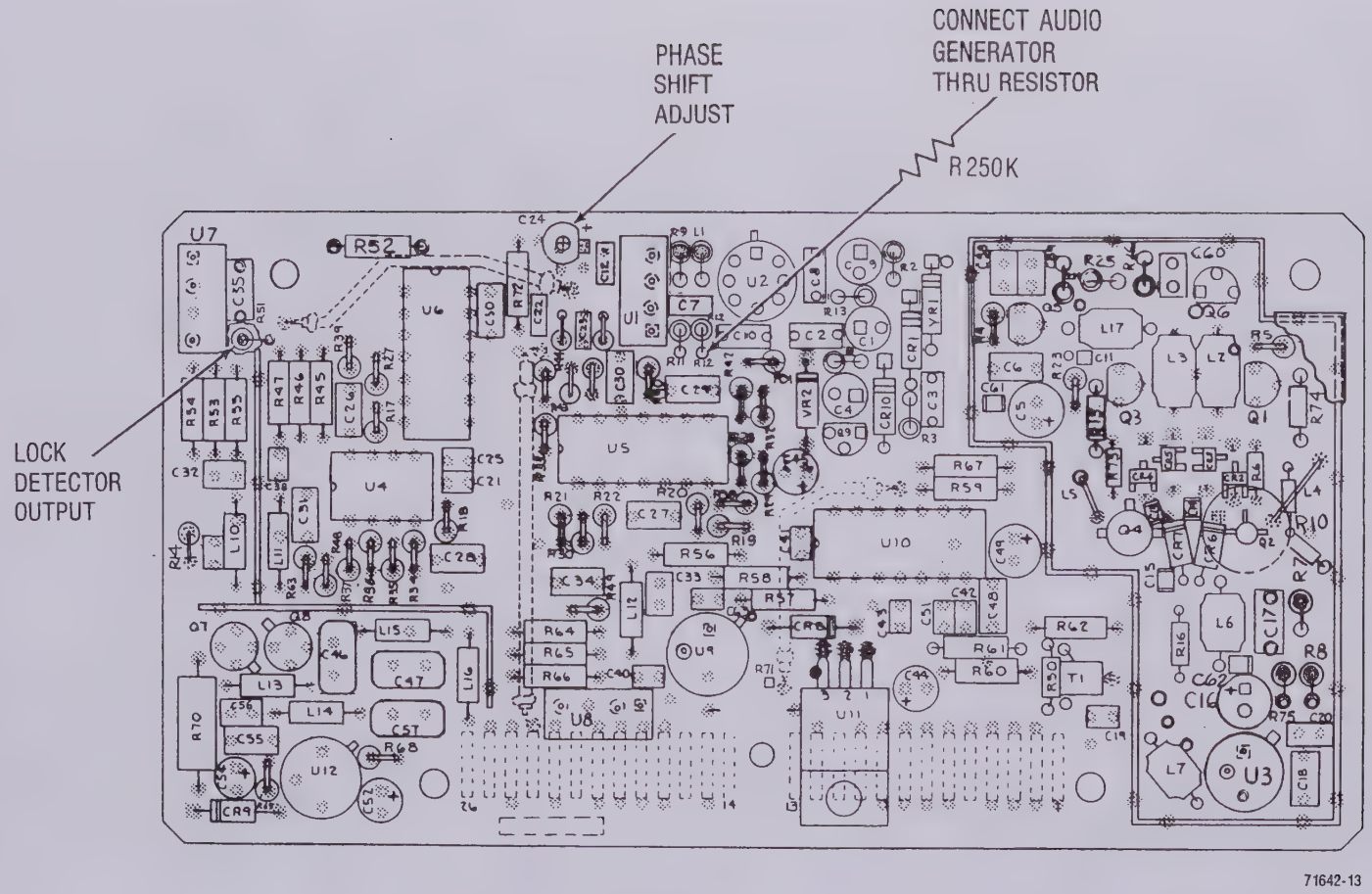


*Figure 3-8. GHz Loop Board – Alignment Points*

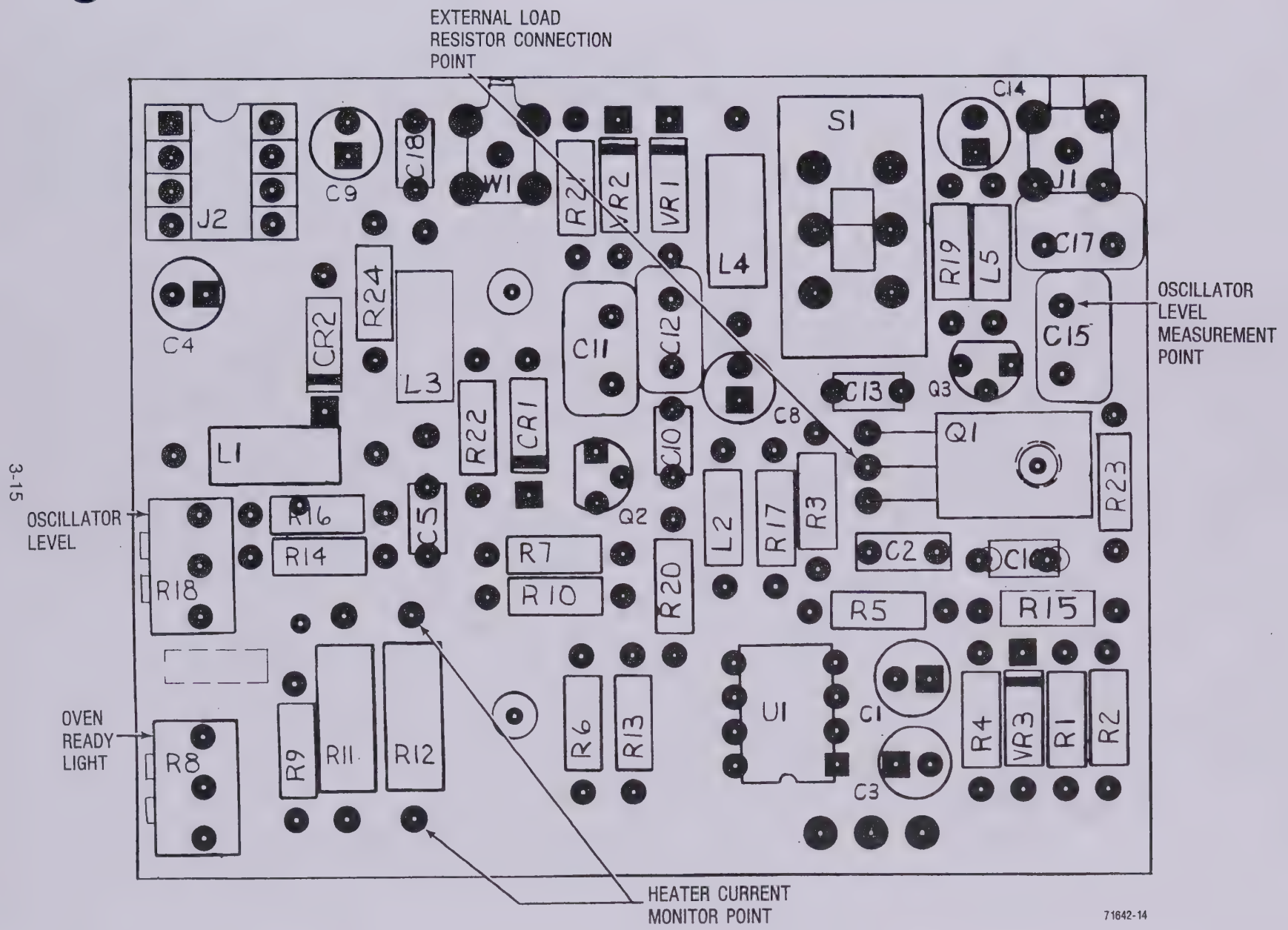


*Figure 3-9. Frequency Standard Interface Board – Alignment Points*

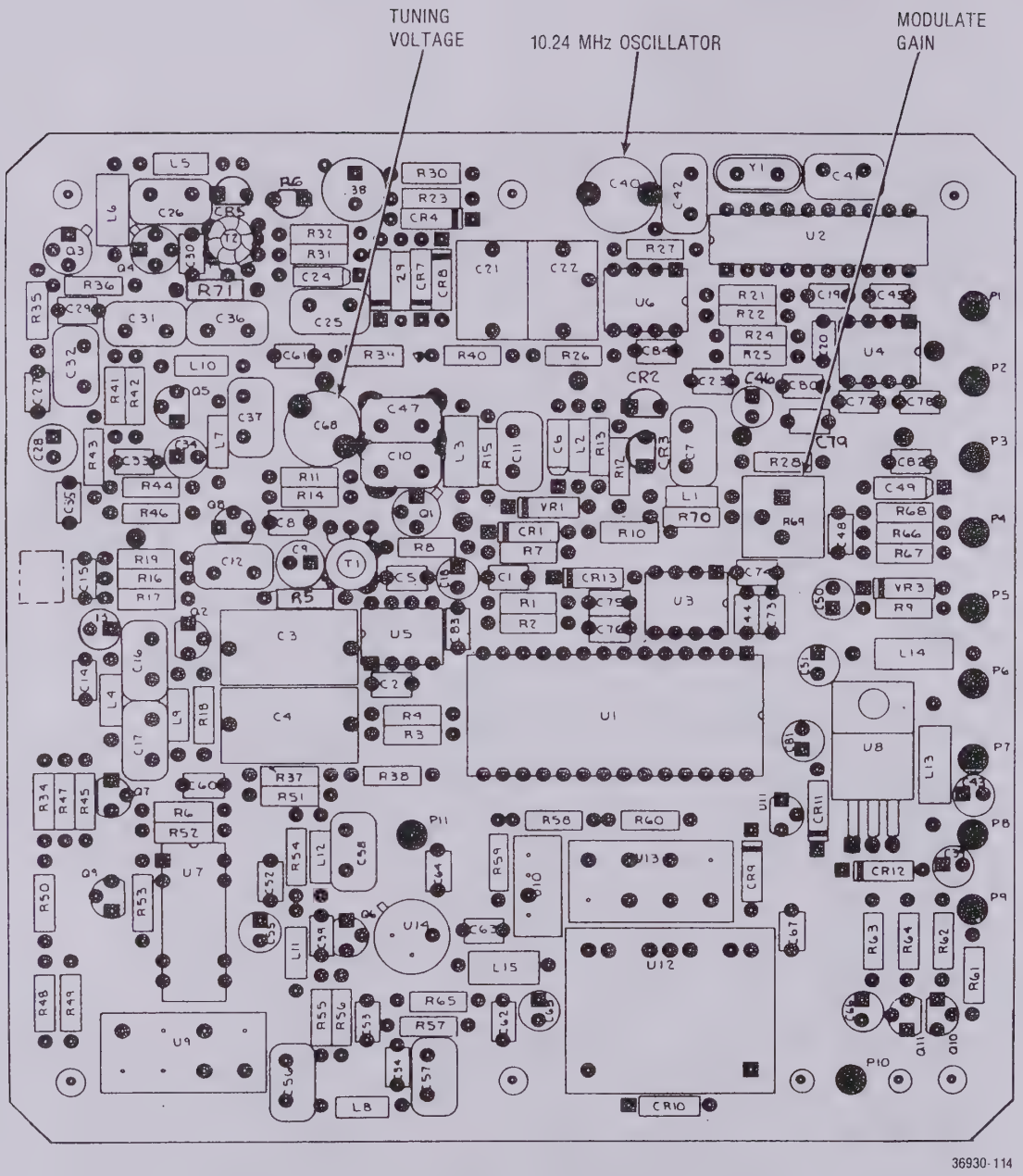


*Figure 3-10. Duplex Generator Board (A17A3) – Alignment Points*

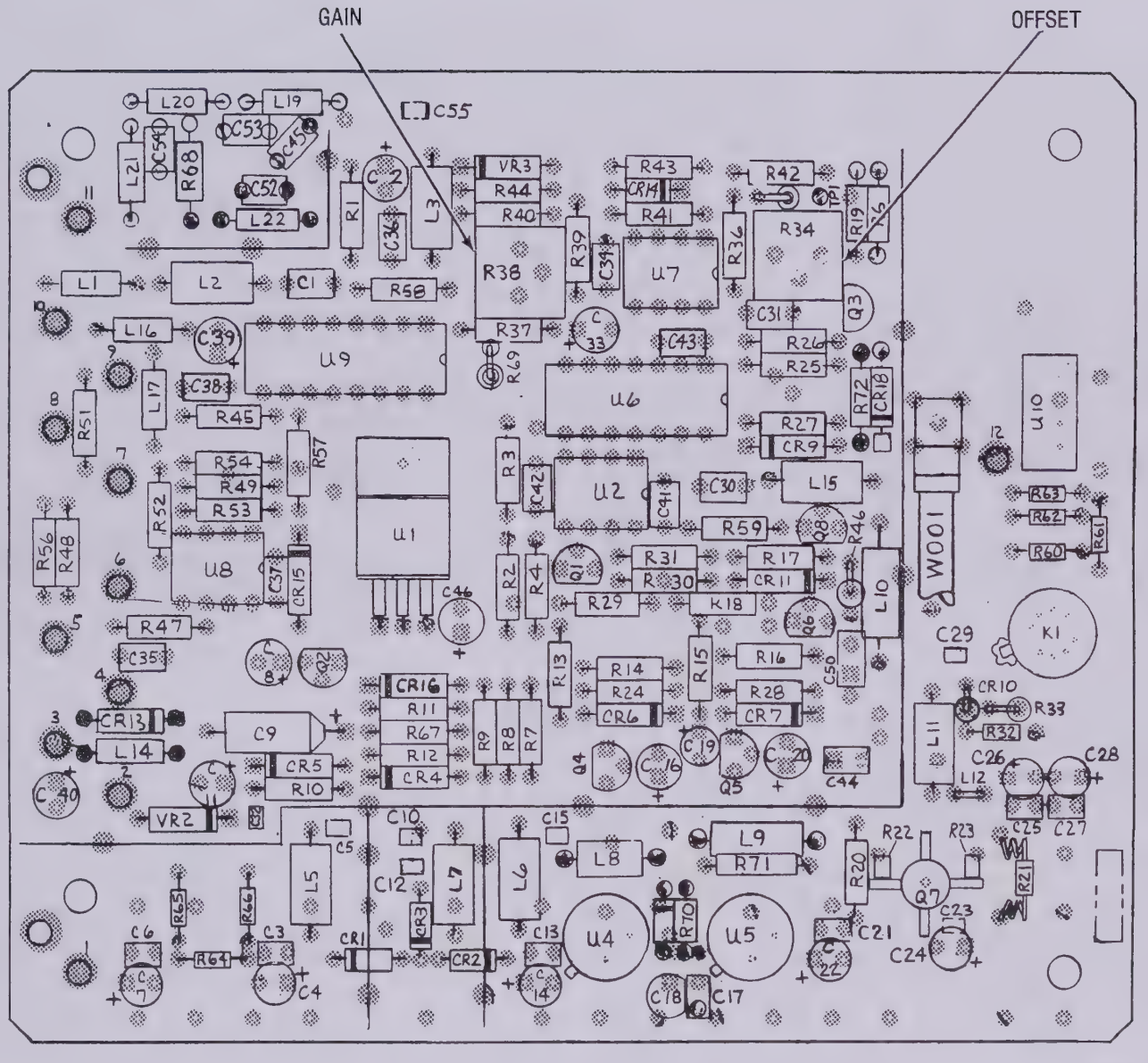


71642-15

*Figure 3-11. Wideband Amplifier Board – Alignment Points*

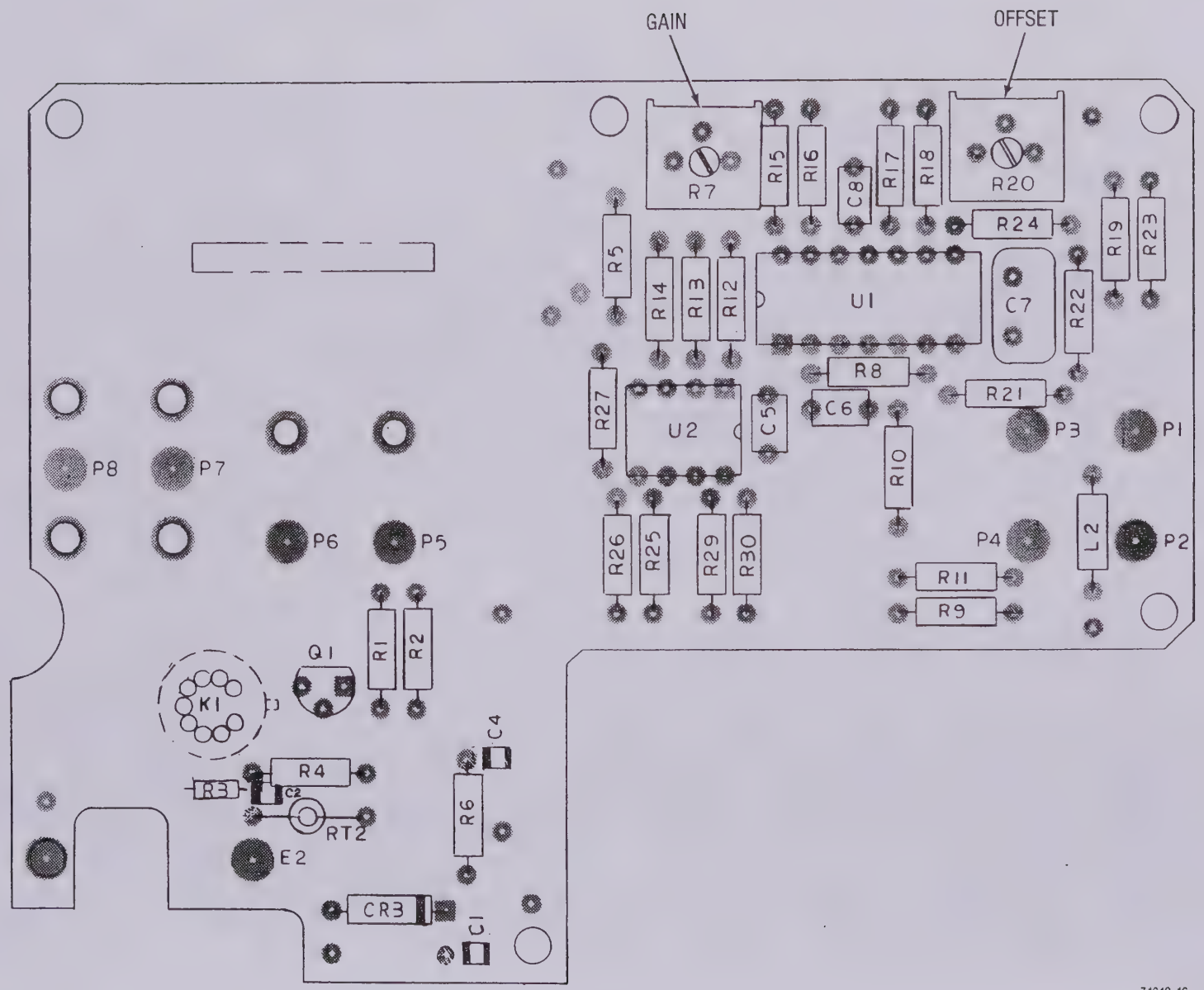


*Figure 3-12. Wattmeter Board – Alignment Points*

***NOTE***

Due to the interaction between the two adjustments the procedure must be repeated a number of times.

9. Repeat steps 5 through 9 until no adjustment of R20 and R7 is required to obtain the 1 watt and 50 watt readings on the CRT wattmeter display.

### 3.3.9 SCOPE COMPENSATION

1. Remove Front Panel Interface Board (A15) and place it on the appropriate extender card.
2. Turn System Analyzer ON and select DC scope display.
3. Apply a 1Vp-p square wave to the vertical scope input.
4. Adjust C11 on the Front Panel Interface board (see Figure 3-3) so that the waveform on the scope display has not overshoot or undershoot (see Figure 3-13).

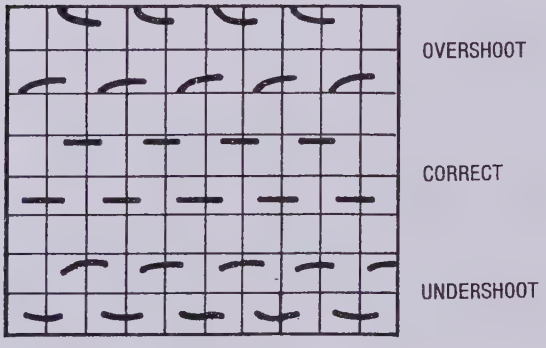


*Figure 3-13. Scope Compensation*

### 3.3.10 CATHODE VOLTAGE

***CAUTION***

*Unless the factory alignment has been disturbed through repair or if the CRT adjustments CRT intensity bias, CRT horizontal gain, CRT vertical gain, and character generator, will not align, do not make the adjustment. Because of the presence of high voltages, +4 KV and −2 KV, on the module requiring adjustment. This adjustment will require a high voltage probe capable of measuring 2KV. Handle this monitor with extreme care when making this adjustment to avoid electrical shock.*

1. Disconnect the System Analyzer from power source. Remove the High Voltage Power Supply module and place it on the appropriate extender card.
2. Connect power to the System Analyzer and turn the unit ON.
3. While monitoring the cathode voltage wire P2-2 (point 2 on High Voltage Power Supply printed wiring board). Adjust R37 (see Figure 3-14) for a cathode voltage of −2000 Vdc ± 10 Vdc.
4. When adjustment is completed disconnect power from System Analyzer and reinstall High Voltage Power Supply.

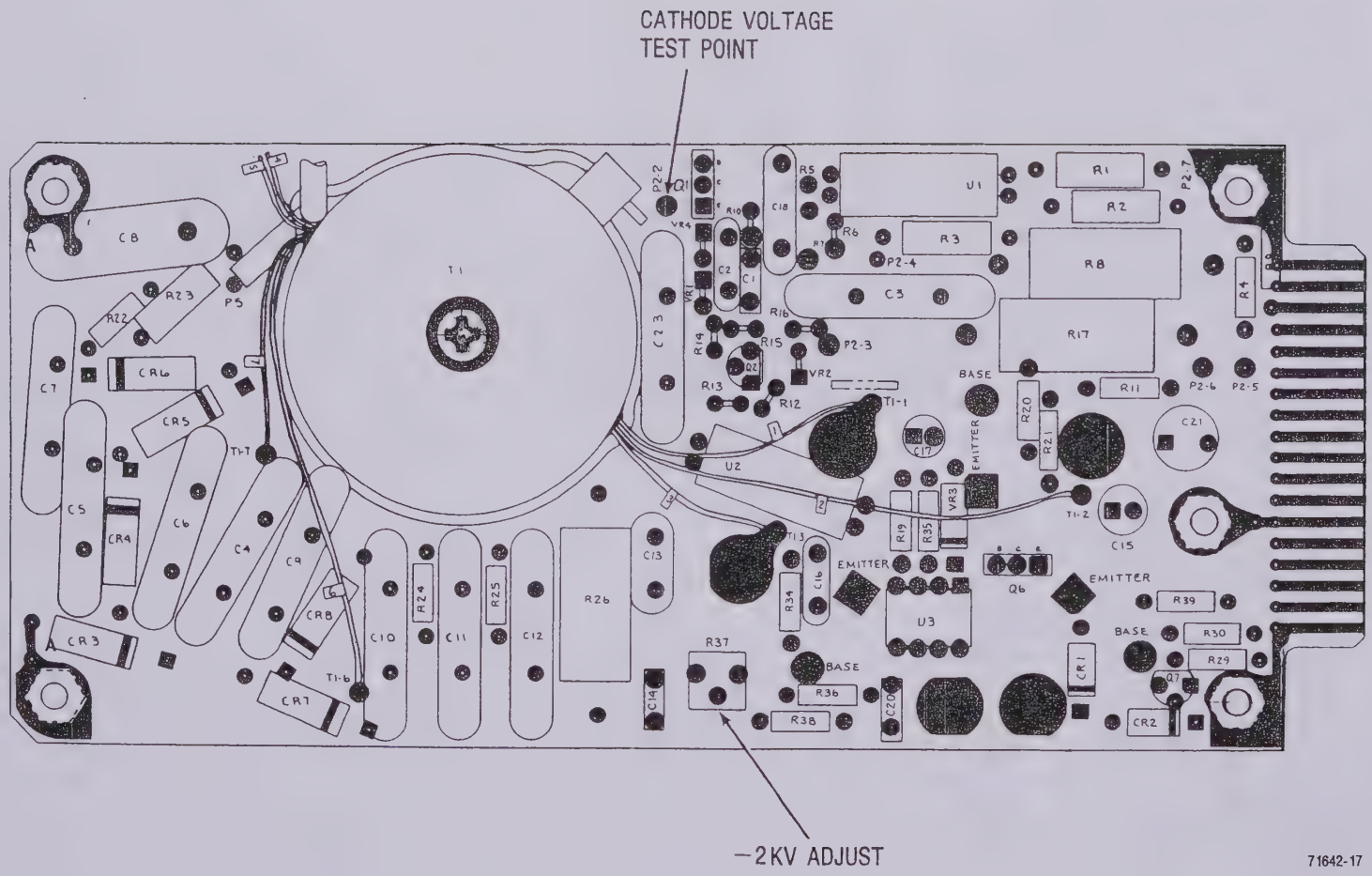


*Figure 3-14. High Voltage Power Supply Board – Alignment Points*

# SECTION 4.
# SYSTEM CHECKOUT AND TROUBLESHOOTING

## 4.1 INTRODUCTION

This section provides a procedure for system checkout and troubleshooting to help isolate system failures. Table 4-1 lists the necessary test equipment or its equivalent.

Table 4-1. Test Equipment for Checkout and Troubleshooting

| Equipment | Part No. or Value |
|---|---|
| *RF Signal Generator | Motorola R-1201A |
| *RF Power Meter | Motorola S-1339A |
| *SINAD Meter | Motorola R-1013A |
| *Modulation Meter | Boonton 82AD |
| RF Power Source | 1 watt to 100 watts |

*An R2001 is suitable for use in place of these separate equipments.

## 4.2 SAFE HANDLING OF CMOS INTEGRATED-CIRCUIT DEVICES

Many of the integrated-circuit devices used in communications equipment are CMOS (complementary metal-oxide semiconductor) ICs. Because of their high open-circuit impedance, CMOS ICs are vulnerable to damage from static charges. Take care in handling, shipping, and servicing these ICs and the assemblies in which they are used.

Even though protection devices are provided in CMOS IC inputs, the protection is effective only against overvoltage in the range of hundreds of volts, such as that encountered in an operating system. In a system, circuit elements distribute static charges and load the CMOS circuits, decreasing the chance of damage. *However, CMOS circuits can be damaged by improper handling of the modules even in a system.*

To avoid damaging circuits, observe the following handling, shipping, and servicing precautions.

1. Before and while servicing a circuit module, particularly after moving within the service area, momentarily touch *both* hands to a bare metal, earth-grounded surface. This will discharge any static charge which may have accumulated on you.

*NOTE*

Wearing a "Conductive Wrist Strap" (Motorola No. RSX-4015A) will minimize static buildup during servicing.

**WARNING**

When wearing a "Conductive Wrist Strap," be careful near high-voltage sources. The "good ground" provided by the wrist strap also increases the danger of lethal shock from accidentally touching high-voltage sources.

2. Whenever possible, avoid touching any electrically conductive parts of the circuit module with your hands.
3. Circuit modules should not be inserted or removed with power applied to the unit.
4. When servicing a circuit module, avoid carpeted areas, dry environments, and certain types of clothing (silk, nylon, etc.) because they contribute to static buildup.
5. All electrically powered test equipment should be grounded. **Apply the ground lead** from the test equipment to the circuit module **before** connecting the **test probe.** Similarly, **disconnect the test probe before** removing the **ground lead.**
6. If you remove a circuit module from the system, lay it on a conductive surface (such as a sheet of aluminum foil) which is connected to ground through 100k of resistance.

**WARNING**

If the aluminum foil is connected directly to ground, be careful of possible electrical shock: don't touch both the foil and other electrical circuits at the same time.

7. When soldering, be sure the soldering iron is grounded.
8. Before connecting jumpers, replacing circuit components, or touching CMOS pins (to replace an integrated-circuit device), be sure to discharge any static buildup as described in precaution 1. Since voltage differences can exist across your body, use only one hand if you must touch pins on the CMOS device and associated board wiring.
9. When replacing a CMOS integrated-circuit device, leave the device in its metal rail container or conductive foam until you insert it into the printed circuit module.
10. Connect all low-impedance test equipment (such as pulse generators, etc.) to CMOS device inputs after you apply power to the CMOS circuitry. Similarly, disconnect such low-impedance equipment before you turn off the power.
11. Replacement modules shipped separately from the factory will be packaged in a conductive material. Any modules being transported from one area to another should be wrapped in a similar material (such as aluminum foil). NEVER USE NON-CONDUCTIVE MATERIAL for packaging these modules.

## 4.3 CHECKOUT AND TROUBLESHOOTING PROCEDURES

Table 4-2 lists steps to follow for both checkout and troubleshooting of the System Analyzer. For best results, follow the "Checkout Procedures" first; if you encounter problems as listed in the "Fault" column, follow the steps listed under "Troubleshooting Procedures" to correct them. Because of the complexity of the system, the table covers only the major failures and provides only a guide to the most probable failed module. The table also assumes that all tests prior to the failure point have been successfully completed, and thus the applicable circuits are okay.

Table 4-3 provides a list of the system test points and their functions. To aid in troubleshooting, test points are identified on block diagrams throughout this manual.

Table 4-2. System Checkout and Troubleshooting Procedures

| Checkout Procedure | Fault | Troubleshooting Procedure |
|---|---|---|
| **POWER ON** | | |
| 1. Check that the ac-input select switch is at 120V. With the front panel's POWER switch at DC Off, connect the unit under test (UUT) to a 120-Vac line source. Verify that the AC and Oven Ready LEDs are on. | No AC indication. | 1. Check the ac line cord and line fuse.<br>2. If system powers up normally when on, replace the AC LED. |
| 2. Set the POWER switch to ON. Verify that after a warmup period, a display is visible on the CRT. | No Oven Ready indication. | 1. Check for approximately +15 Vdc at J16 pin 1 of the A16 board. If it is not present, check the fuse on the A3 board. If the fuse is okay, replace the Battery Charger board (A3).<br>2. Check J16 pin 5 of A16 for +9 Vdc and J16 pin 6 for approximately +7.5 Vdc. If J16 pin 5 is okay and J16 pin 6 is 0 Vdc, replace the LED. If the +9 Vdc is not present on J16 pin 5, replace A16. |
| | System won't turn on. | 1. Check for approximately +15 Vdc at TP3 of the Control board (A4). If it is not present, replace the Battery Charger board (A3).<br>2. Check for +5 Vdc at TP5 and +11.3 Vdc at TP6 of the Control board (A4). Check for +5.1 Vdc at U2 pin 16 of A4.<br>If one of these voltages is not present, replace the Control board (A4). |

Table 4-2. System Checkout and Troubleshooting Procedures (Cont)

| Checkout Procedure | Fault | Troubleshooting Procedure |
|---|---|---|
| **POWER ON (Cont)** | | |
| | | 3. Check for shorts to ground at TP1, TP2, TP3, TP4, TP5, TP6, and TP7 of the Output board (A5).<br>If there is a short, remove A5 and recheck for shorts to ground on the A5 alone at all test points. If there is still a short, replace A5. If there is no short, locate the short in the system. |
| | System turns on, but there is no display on the CRT for any mode. | 1. Remove the bottom cover of the System Analyzer. Check for approximately −4.3 Vdc at edge-connector pins 27 and 28 and for −4.69 Vdc at edge-connector pins 3 and 4 of the High-Voltage Power Supply (A1). If voltages are not present, replace A1.<br>2. Check for the presence of a 20-kHz square wave signal at U4 pins 11 and 14 of the Control board (A4). If signals are not present, replace A4.<br>3. Check for approximately +110 Vdc at TP1 and −110 Vdc at TP7 of the Output board (A5). If voltages are not present, replace A5.<br>4. In Gen/Mon Mtr display, check for the presence of a 110-Vp-p ramp signal at TP2, TP3, TP4, and TP5 of the Scope Amplifier board (A2). If signals are not present, replace A2.<br>5. If troubleshooting steps 1-4 check out okay, replace the CRT. |
| **KEYBOARD** | | |
| 1. Verify that each key has the proper effect by observing the Gen/Mon Mtr display and entering a frequency of 123.4567 MHz and a PL frequency of 890. Check for proper cursor-key operation.<br><br>2. Verify that the up and down DISPLAY, FUNCTION, and MODULATION keys work properly and their associated LEDs light up. | Only one key is inoperative.<br><br>More than one key is inoperative or has the wrong effect. | Replace the defective key switch.<br><br>Replace the Processor board. |
| **NONVOLATILE MEMORY** | | |
| Select some random combination of DISPLAY, FUNCTION, and MODULATION modes. Simultaneously depress both cursor keys and, after a five-second delay, turn the system power OFF. Turn the system power back ON and verify that the same DISPLAY, FUNCTION, and MODULATION modes are present. | Any part of the nonvolatile memory fails to remember. | WARNING<br>Lithium Battery<br>Do not multilate or disassemble the battery cell. The lithium metal is a very active material that burns in the presence of water or high humidity. Do not put the battery in fire, attempt to charge it, heat it above 100°C, or solder directly to the cell. Do not overdischarge |

Table 4-2. System Checkout and Troubleshooting Procedures (Cont)

| Checkout Procedure | Fault | Troubleshooting Procedure |
|---|---|---|
| **NONVOLATILE MEMORY (Cont)** | | |
| | | the cell to a reverse voltage greater than 3 volts: the battery may burst and burn or release hazardous materials.<br><br>1. Troubleshooting Instructions:<br><br>A. Turn the system POWER switch OFF and disconnect the unit from the primary power source.<br><br>B. Remove the Processor board from the system and place it on a nonconductive surface.<br><br>C. With a voltmeter, measure the dc voltage across the lithium battery in the lower left corner of the board.<br><br>D. If the battery voltage is less than 2.4V, the cell is discharged and should be replaced. If the battery is okay, replace the entire Processor board (A14).<br><br>E. If you need a new battery, obtain a new cell (P/N 60-80396A0) from Motorola. Replace the battery using the procedure in Part 2.<br><br>*CAUTION*<br>*Do not substitute another type of lithium battery. The specified battery was chosen with safety as a major consideration. Other lithium battery types may present a hazard when used in this system.*<br><br>2. Replacement Instructions:<br><br>A. Turn the system POWER switch OFF and disconnect the unit from the primary power source.<br><br>B. Remove the Processor board from the system and place it on a nonconductive surface.<br><br>C. Cut the battery end of each of the two wires that connect the battery to the circuit board.<br><br>D. Remove the battery from the hold-down clip. |

Table 4-2. System Checkout and Troubleshooting Procedures (Cont)

| Checkout Procedure | Fault | Troubleshooting Procedure |
|---|---|---|
| **NONVOLATILE MEMORY (Cont)** | | |
| | | E. Remove the new battery from its shipping container and put the old battery into the shipping container. Dispose of the battery as described in Part 3.<br><br>F. With a soldering iron of 40 watts or lower, remove the old battery leads from the board.<br><br>G. Being careful not to short the battery leads to each other or to the battery case, install the battery in the hold-down clip with the negative lead nearest the left edge of the card (with the circuit-board connector edge toward you).<br><br>H. Solder the leads from the new battery into the printed wiring board at the points from which the old leads were removed.<br><br>I. Trim the lead ends and put the board back into the system.<br><br>3. Disposal Instructions:<br><br>A. Do not dispose of the lithium battery by putting it in the everyday trash. Lithium batteries are classified as hazardous material and must be disposed of accordingly.<br><br>B. Consult state and local codes for the appropriate disposal procedure.<br><br>C. Motorola will dispose of the battery if you send it in the shipping container (by the same method used to send the new battery to you) to the following address:<br><br>Motorola, Inc.<br>Return Goods Department<br>1313 East Algonquin Road<br>Schaumburg, Ill 60196 |
| **MODULATION CAPABILITY** | | |
| 1. Set the UUT to Generate FM function and select Gen/Mon Mtr display. On the Gen/Mon Mtr display, enter a DPL code of 111. Select Oscilloscope display and connect the Mod Out port to the vertical input port (Vert In). Set the Code Synthesizer mode to continuous (Cont) PL/DPL. On the scope, verify | No DPL (modulation) signal on the CRT. | 1. Check TP1 of the Audio Synthesizer board (A10) for the DPL signal. If it is not present, replace the Audio Synthesizer board.<br><br>2. Check for the DPL signal on pin 64 of the Audio Synthesizer board. If it is not present, replace the IEEE Interface board (A13), or check for the presence of the A13 jumper card. |

Table 4-2. System Checkout and Troubleshooting Procedures (Cont)

| Checkout Procedure | Fault | Troubleshooting Procedure |
|---|---|---|
| **MODULATION CAPABILITY (Cont)** | | |
| the presence of a DPL waveform whose amplitude is variable with the Code Synthesizer level control.<br><br>2. Move the MODULATION switch from CONT to OFF and verify that a short burst of 133 Hz is present before the output stops.<br><br>3. Move the MODULATION switch to BURST. Verify that a 133-Hz tone is output as long as the switch is held at BURST. | | 3. Check for the DPL signal at TP6 of the Audio Synthesizer board. If it is not present, replace the Audio Synthesizer board.<br><br>4. Check for the DPL signal at TP1 of the Scope Amplifier board (A2). If it is not present, replace the Scope/DVM Control board (A7).<br><br>5. If signal switching is okay to the Scope Amplifier board, proceed to the **SCOPE** Troubleshooting Procedure. |
| 4. Select continuous (Cont) Tone A mode. Verify a Tone A output on the scope and at the speaker.<br><br>5. Select Tone Remote mode. Verify that moving the MODULATION switch from OFF to BURST generates a single Tone-Remote-Access Sequence.<br><br>6. Connect a microphone to the Mic port. Turn up the external level control (Ext Level) and verify that speaking into the mike produces a modulation signal on the scope display. | No external modulation on the CRT. | 1. Check for the modulation signal at TP7 of the Audio Synthesizer board. If it is not present, replace the Audio Synthesizer board.<br><br>2. Check for the modulation signal on pin 66 of the Audio Synthesizer board. If it is not present, replace the IEEE Interface board (A13), or check for the presence of the A13 jumper card.<br><br>3. Continue troubleshooting at step 3 of "No DPL signal on the CRT." |
| **FREQUENCY COUNTER** | | |
| 1. Set the UUT to Generate CW function with an output frequency of 30 MHz at 0 dBm, as displayed on the Gen/Mon Mtr display. Connect the Antenna port to the Frequency Counter Input port (Counter In) of the UUT, and pull the RF Port Select knob to the Antenna position. Select Freq Counter display and verify a frequency reading of 30 MHz.<br><br>2. Set the UUT to Generate FM function and select Gen/Mon Mtr display. Turn the Code Synthesizer and external modulation sources OFF. Select Narrowband mode on the bandwidth switch (BW), and adjust the 1 KHz Level control for an FM-deviation | Frequency Counter does not work. | 1. Check for a 1-kHz signal at TP9 of the Audio Synthesizer board (A10). If it is not present, check for the 10-MHz signal from the Frequency-Standard Interface board (A16) to the RF Synthesizer module (A9). If it is present, replace the RF Synthesizer module. If it is not present, replace the Frequency-Standard Interface board.<br><br>2. If the 1-kHz signal is present, check for the signal to be counted at pins 61 and 63 of the Processor Interface board (A11). If it is not present, replace the Front-Panel Interface board (A15).<br><br>3. If the signal is okay up to the Processor Interface board, replace the Processor Interface board. |

Table 4-2. System Checkout and Troubleshooting Procedures (Cont)

| Checkout Procedure | Fault | Troubleshooting Procedure |
|---|---|---|
| **FREQUENCY COUNTER (Cont)** | | |
| reading of 5 kHz. Connect the Mod Out port to the Counter In port of the UUT. Select Freq Counter display and verify a nominal frequency reading of 1 kHz. | | |
| **DVM** | | |
| 1. Maintaining the same conditions as with **FREQUENCY COUNTER** Checkout Procedure 2, select DVM display and AC mode on the display. Verify a DVM reading of 0.707 Vrms ±0.04 Vrms<br><br>2. Select DC mode and verify a dc reading of near zero volts. | DVM AC mode does not work. | 1. Check for the DVM signal at pin 22 of the Front-Panel Interface board (A15). If it is not present, replace the Front-Panel Interface board.<br><br>2. Check for short bursts of the DVM AC signal at TP2 of the Scope/DVM Control board (A7). If the signal is not present at TP2, replace the Scope/DVM Control board.<br><br>3. If the signal is okay to TP2 of A7, replace the Processor Interface board (A11). |
| | DVM DC mode does not work. | 1. Check for the dc input level attenuated by factors of 10 to less than 1 volt at pin 22 of the Front-Panel Interface board (A15). If it is not present, or if it is greater than 1 volt, replace the Front-Panel Interface board.<br><br>2. Check for the same voltage at TP2 of A7. If the signal is not present, replace A7.<br><br>3. If the signal is present at TP2, replace the Processor Interface board (A11). |
| **SCOPE** | | |
| 1. Set the UUT to Scope AC display and connect the scope's vertical input port (Vert In) to the Mod Out port. Enable the internal 1-kHz modulation source. Verify the operation of each position of the vertical-input range switch and the vertical vernier-gain control. | No vertical display. | 1. Check for the input signal at TP1 of the Scope Amplifier board (A2). If it is not present, replace the Front-Panel Interface board (A15).<br><br>2. If the signal is okay at TP1, replace the Scope Amplifier board (A2). |
| 2. With the same connection as in step 1, verify the operation of each position of the horizontal control and the horizontal timebase vernier.<br><br>3. With the horizontal control set to external mode (Ext), connect the external horizontal port (Ext Horiz) to the Mode Out port. Verify that a | No horizontal sweep. | 1. Check for a voltage level between −2.0 Vdc and +2.0 Vdc at TP1 of the Scope Amplifier board (A2). If the voltage cannot be brought within range with either the vertical range attenuator or the vertical position control, replace the Front-Panel Interface board (A15).<br><br>2. If the voltage at TP1 is okay, replace the Scope Amplifier board (A2). |

Table 4-2. System Checkout and Troubleshooting Procedures (Cont)

| Checkout Procedure | Fault | Troubleshooting Procedure |
|---|---|---|
| **SCOPE (Cont)** | | |
| horizontal line whole-length is variable with the horizontal vernier.<br><br>4. Connect the Vert In port to the Mod Out port on the UUT. Set the vertical and horizontal controls for a convenient display. Verify a steady sync is obtained in either Normal or Auto mode and that the point of triggering is adjustable with the Trig Level control. Remove the input signal and verify a horizontal sweep with Auto triggering and no horizontal sweep with Normal triggering. | No vertical sync. | 1. Check for sync pulses at pin 12 of the Scope/DVM Control board (A7) and for a nominal SYNC PRESENT level of zero volts at pin 76. If either signal is not present, replace the Scope/DVM Control board.<br><br>2. If SYNC PULSE and the SYNC PRESENT lines are okay, replace the Scope Amplifier board (A2). |
| **DISTORTION/SINAD METER** | | |
| 1. Set the UUT for Generate FM function, Narrowband mode and Tone Memory display. On the Tone Table, set Tone A for 2000.0 Hz.<br><br>2. Select Gen/Mon Mtr display and continuous (Cont) Tone modulation. Turn the Ext Level and the 1 KHz Level controls OFF. Adjust the Code Synthesizer level control (Code Synth Lvl) for an FM deviation of 1.88 kHz, as read on the CRT display.<br><br>3. Without disturbing the Code Synth Lvl control, turn the Code Synthesizer OFF. Turn ON the 1 KHz Level control and adjust for an FM deviation of 7.5 kHz on the CRT display.<br><br>4. Connect the Mod Out port to the SINAD In port on the UUT. Verify a SINAD reading greater than 25 dB.<br><br>5. Set the Code Synthesizer to continuous mode (Cont) and verify a SINAD reading of 12 dB ± 1 dB. | Distortion/SINAD meter does not work. | 1. If the DVM mode checks okay, replace the Scope/DVM Control board.<br><br>2. If the DVM mode does not check okay, go to the troubleshooting list for "DVM AC mode does not work." |
| **SCAN MODE** | | |
| Set the UUT for Gen/Mon Mtr display. Verify that the RF Scan knob operates properly. | | |

Table 4-2. System Checkout and Troubleshooting Procedures (Cont)

| Checkout Procedure | Fault | Troubleshooting Procedure |
|---|---|---|
| **GENERATE MODE** | | |
| 1. Set the UUT for Generate FM function at 200 MHz and select Gen/ Mon Mtr display. Verify an RF-level-output display on the CRT. | No generate output. | 1. Remove the RF cable between the RF Synthesizer module (A9) and the RF Input module (A17). Check for a nominal level of 0 dBm at the Synthesizer output. If there is no output, replace the RF Synthesizer module. |
| 2. Connect the RF millivoltmeter with a 50-ohm termination to the Antenna port, and pull the RF Port Select knob on the UUT to the Antenna position. Set the RF step attenuator (Step) to 0 dB and adjust the Variable RF Level control for a displayed output level of +13 dBm. Verify that the RF millivoltmeter reads +13 dBm ±2 dBm. | | 2. If the Synthesizer output is okay, replace the RF Input module (A17). |
| 3. Repeat step 2 at the center frequency of 800 MHz. | No frequency modulation. | 1. Check for the modulation signal at pin 30 of the RF Synthesizer module (A9). If the signal is okay, replace the RF Synthesizer module. |
| 4. Increase the RF step attenuator setting in 10-dB increments, and verify that the displayed RF level decreases in 10-dB increments. | | 2. If the modulation signal is not present, proceed to the troubleshooting list under "No DPL (modulation) signal on the CRT." |
| 5. Set the Code Synthesizer MODULATION switch and the Ext Level control to OFF. Select Narrowband mode and adjust the 1 KHz Level control for a 5-kHz FM-deviation reading on the CRT display. Verify a 1-kHz tone at the speaker output. | | |
| 6. Connect the Modulation Meter to the UUT's Antenna Port and pull the RF Port Select knob to the Antenna position. Set the Modulation Meter for a deviation display of 5 kHz ±250 Hz. | | |
| 7. Select Wideband mode on the UUT and verify that the CRT displays a deviation of 20 kHz. Also verify that the Modulation Meter shows a peak deviation of 20 kHz ±1 kHz. | | |
| 8. Select Modulation display on the UUT and verify a peak-to-peak modulation display of 40 kHz ±2 kHz. | | |

Table 4-2. System Checkout and Troubleshooting Procedures (Cont)

| Checkout Procedure | Fault | Troubleshooting Procedure |
|---|---|---|
| **GENERATE MODE (Cont)** | | |
| 9. Select Generate CW function and verify that there is no modulation on the CRT.<br><br>10. Set the UUT for Generate AM function and Gen/Mon Mtr display, and adjust for an RF output level of 0 dBm. Adjust the 1 KHz Level control for a 50% AM reading on the CRT. Verify that the Modulation Meter reads 50% ±10% AM.<br><br>11. Select Modulation display and verify a low-distortion 1-kHz sinewave.<br><br>12. Set the UUT for Generate SSB/DSBSC function and verify a low-distortion 1-kHz sinewave on the CRT.<br><br>13. Set the UUT for Generate SWP 1-10 MHz function and Scope DC display. Verify a horizontal trace and a center-frequency display on the CRT.<br><br>14. Set the UUT for Generate SWP 0.01-1 MHz function and verify the same results as in step 13. | | |
| **POWER MONITOR MODE** | | |
| Set the UUT to POWER Monitor mode. Set the RF step attenuator at 30 dB, and select Gen/Mon Mtr display. Connect the RF power source to the RF In/Out port. Key the power source and verify a correct power reading on the CRT display. Unkey the power source. | Internal Wattmeter is wrong. | Replace RF Input Module (A17). |
| **MONITOR MODE** | | |
| 1. Set the UUT to Monitor FM function. Set the Squelch control to OFF and verify the signal-level LED (Sig Lvl) lights up and there is noise at the speaker. Turn the Squelch control fully ON and verify the Sig Lvl LED goes off and there is no noise at the speaker. | No Monitor function. | 1. Apply a 10.7-MHz modulation carrier to the RF input. Check for normal receiver operation, but with reduced sensitivity. If the receiver is not working, replace the Receiver board (A8).<br><br>2. If the receiver checks okay and the Generate function is okay, replace the RF Input module (A17). |

Table 4-2. System Checkout and Troubleshooting Procedures (Cont)

| Checkout Procedure | Fault | Troubleshooting Procedure |
|---|---|---|
| **MONITOR MODE (Cont)** | | |
| 2. Repeat step 1 with the AM function. | No monitor frequency-error display. | Go to the troubleshooting list under "Frequency Counter does not work." |
| 3. Repeat step 1 with the SSB/DSBSC function and enable the BFO. After the test, turn the BFO OFF. | Monitor frequency error is wrong. | 1. Check for the IF signal at pin 91 of the Scope/DVM Control board (A7). If it is not present, replace the Receiver board (A8).<br>2. If the IF signal is present, replace the Scope/DVM Control board. |
| 4. Select the Narrowband FM Monitor function at 300 MHz, and set the RF step attenuator to 0 dB. Connect the RF Signal Generator to the RF In/Out port and the SINAD Meter to the Demod Out port. Set the RF Signal Generator for a center frequency of 300 MHz and for 3 kHz FM at a 1-kHz rate. Adjust the RF output level from the Signal Generator for a 10-dB reading on the SINAD Meter. Verify that the Signal Generator's level is less than −103 dBm (1.5 μVrms). | | |
| 5. Using the Modulation Meter, calibrate the RF Signal Generator for 3 kHz FM at a 1-kHz rate. Set the Generator for a nominal output level of −60 dBm and connect it to the Antenna port of the UUT. Select Gen/Mon Mtr display and verify a monitor deviation reading of 3 kHz ± 150 Hz. | | |
| 6. Calibrate the RF Signal Generator for 50 kHz FM at a 1-kHz rate. Select Wideband mode on the UUT and verify a reading of 50 kHz ± 2.5 kHz on the CRT's deviation display. | | |
| 7. Calibrate the RF Signal Generator for 30% AM at a 1-kHz rate. Set the Generator for a nominal output level of −60 dBm and connect it to the Antenna port of the UUT. Select Monitor AM function and Narrowband mode. Verify a monitor-AM reading of 30% ±5%. | | |
| 8. Monitor the percent AM displayed on the CRT while increasing the RF level out of the Signal Generator. Verify that the IF-Overload Warning occurs before the displayed AM exceeds a reading of 30% ± 5%. | | |

Table 4-2. System Checkout and Troubleshooting Procedures (Cont)

| Checkout Procedure | Fault | Troubleshooting Procedure |
|---|---|---|
| **MONITOR MODE (Cont)** | | |
| 9. Select Modulation display on the UUT and verify the presence of the received modulation signal.<br><br>10. Select Gen/Mon Mtr display and Wideband mode on the UUT. Vary the center frequency on either the UUT or the Signal Generator, and verify that the frequency-error display properly represents the difference between the UUT's center frequency and the Signal Generator's center frequency.<br><br>11. Select IF display on the UUT and verify an IF envelope on the CRT. | | |
| **SPECTRUM ANALYZER** | | |
| 1. Set the UUT for Monitor function at 300 MHz, Spectrum Analyzer display, and 0-dB input attenuation. Connect the Signal Generator to the Antenna port on the UUT. Verify a spectral amplitude of −40 dBm ± 3 dB on the CRT display. Increase the RF step attenuator setting in 10-dB increments, verifying that the spectral amplitude decreases by 10 dB ± 2 dB with each step.<br><br>2. Verify the dispersion control (Dispr) works. | No spectrum-analyzer sweep.<br><br>Spectrum display is wrong. | 1. Check pin 67 of the Processor Interface board (A11) for a 100-Hz square wave. If it is not present, replace the Processor Interface board.<br><br>2. If there is a 100-Hz signal, replace the Scope/DVM Control board (A7).<br><br>Replace the Receiver board (A8). |
| **DUPLEX GENERATOR** | | |
| 1. Select Duplex Gen display and Monitor FM function at a monitor frequency of 100 MHz. Set the offset frequency to 45 MHz. With the Image switch set on Low, verify a displayed Duplex frequency of 55 MHz. Set the Image switch to High, and verify a displayed Duplex frequency of 145 MHz. | No Duplex output. | Replace the RF Input module (A17). |

Table 4-2. System Checkout and Troubleshooting Procedures (Cont)

| Checkout Procedure | Fault | Troubleshooting Procedure |
|---|---|---|
| **DUPLEX GENERATOR (Cont)** | | |
| 2. Set the offset frequency on the screen for 0 to 10 MHz, and verify displayed Duplex frequencies from 100 to 110 MHz.<br><br>3. Set the UUT to Generate FM function with Duplex Gen display. With the Code Synthesizer and the external modulation sources OFF, adjust the 1 KHz Level control for an FM-deviation reading of 20 kHz on the CRT. Select Monitor function and set the offset frequency to 0 Hz. Connect the DUPLEX GEN Output port to the Antenna port, and verify an FM-deviation reading of 20 kHz ± 1 kHz on the CRT. | | |

Table 4-3. Test-Point Identification
(All test points are located near the top edge of the board. Count them from left to right, as you face the component-side of the board.)

| Test-Point Number | Signal Name |
|---|---|
| **Scope Amplifier Board (A2)** | |
| 1 | VERTICAL DRIVE |
| 2 | VERTICAL DEFLECTION DRIVE |
| 3 | $\overline{\text{VERTICAL DEFLECTION DRIVE}}$ |
| 4 | HORIZONTAL DEFLECTION DRIVE |
| 5 | $\overline{\text{HORIZONTAL DEFLECTION DRIVE}}$ |
| 6 | HORIZONTAL DRIVE |
| 7 | CRT Z-AXIS |
| 8 | TIME BASE OUTPUT |
| 9 | FOCUS TV |
| 10 | INTENSITY TV |
| **Low-Voltage Power Supply – Battery Charger Board (A3)** | |
| 1 | FREQUENCY STANDARD SUPPLY |
| 2 | BATTERY CHARGER SUPPLY |
| **Low-Voltage Power Supply – Control Board (A4)** | |
| 1 | DC CURRENT SENSE |
| 2 | AC CURRENT SENSE |
| 3 | FREQUENCY STANDARD SUPPLY |
| 4 | ERROR VOLTAGE REFERENCE |
| 5 | $V_L$ |
| 6 | $V_S$ |

Table 4-3. Test-Point Identification (Cont)

| Test-Point Number | Signal Name |
|---|---|
| **Low-Voltage Power Supply – Output Board (A5)** | |
| 1 | +110V |
| 2 | +33V |
| 3 | +12V |
| 4 | −5V |
| 5 | +5V |
| 6 | −12V |
| 7 | −110V |
| **Low-Voltage Power Supply – Switcher Board (A6)** | |
| 1 | AC DRIVE |
| 2 | $\overline{\text{AC DRIVE}}$ |
| 3 | DC DRIVE |
| 4 | $\overline{\text{DC DRIVE}}$ |
| **Scope/DVM Control Board (A7)** | |
| 1 | VERTICAL CHARACTER SYNC |
| 2 | EXT DVM TO A/D |
| 3 | +15V |
| 4 | POSITIVE PEAK DETECTOR |
| 5 | INT DVM TO A/D |
| 6 | NEGATIVE PEAK DETECTOR |
| 7 | CARRIER + MOD LEVEL |
| 8 | CHARACTER GEN RESET |
| 9 | GND |
| 10 | GND |
| 11 | +8V |
| 12 | −8V |

Table 4-3. Test-Point Identification (Cont)

| Test-Point Number | Signal Name |
|---|---|
| **Audio Synthesizer Board (A10)** | |
| 1 | SYNTH DPL AUDIO |
| 2 | DPL CLOCK |
| 3 | UNFILTERED DPL |
| 4 | SYNTH D/A OUTPUT |
| 5 | GROUND |
| 6 | COMPOSITE MODULATION AUDIO |
| 7 | COMPOSITE EXTERNAL MOD AUDIO |
| 8 | SYNTHESIZER CLOCK 104,857.6 HZ |
| 9 | 1 KHZ MODULATION SOURCE |
| **Processor Interface Board (A11)** | |
| 1 | A/D INPUT |
| 2 | DVM/FREQ COUNTER SELECT |
| 3 | FREQUENCY COUNTER INPUT |
| **Processor (A14)** | |
| 1 | CHARACTER LINE CLOCK |
| 2 | CHARACTER ROW CLOCK |
| 3 | 250 KHZ |
| 4 | DOT CLOCK |
| 5 | $\overline{\text{RESET}}$ |
| 6 | HALT |
| 7 | Q |
| 8 | R/W |
| 9 | E |
| **Front-Panel Interface Board (A15)** | |
| 1 | ATTENUATOR BUFFER OUTPUT |

# SECTION 5.
# SYSTEM WIRELIST AND PARTS LIST — SYSTEM MOTHERBOARD (A19)

With the exception of the Frequency-Standard Interface board (A16), the RF Input module (A17), and the Front Panel assembly (A18), all modules plug into sockets mounted on the System Motherboard (A19). Ribbon cables connect the A16 and A17 to the A19 board. The Front-Panel Left Flex and Front-Panel Right Flex connect the A18 to the A19.

The System Motherboard provides most of the interconnections between modules. These interconnections are specified by the System Motherboard wirelist (Table 5-1). Because of shielding requirements, some interconnections must be made with co-axial cables. These interconnections are specified in the system wirelist (Table 5-2).

The printed wiring board assembly and parts list for the System Motherboard are shown after these wirelists in Figure 5-1. Following that, Figure 5-2 coordinates views of the System Analyzer's back and top (cover removed) with a chassis parts list, and Figure 5-3 coordinates a view of the Analyzer's bottom (cover removed) with the system parts list.

Table 5-1. System Motherboard Wirelist (Sheet 1 of 57)

| TABLE OF CONTENTS | |
|---|---|
| **CONNECTOR** | **SHEET** |
| E1-E15 | 2 |
| J1 | 2 |
| J2 | 3 |
| J3 | 6 |
| J4 | 8 |
| J5 | 10 |
| J6 | 12 |
| J7 | 14 |
| J8 | 18 |
| J9 | 21 |
| J10 | 24 |
| J11 | 26 |
| J12 | 31 |
| J13 | 35 |
| J14 | 39 |
| J15 | 43 |
| J16 | 47 |
| J17 | 47 |
| J18 | 49 |
| J19 | 50 |
| J20 | 50 |
| P1 | 50 |
| P2 | 54 |
| S1 | 57 |
| V1 | 57 |
| V2 | 57 |
| NE1 | 57 |
| NE2 | 57 |

Table 5-1. System Motherboard Wirelist (Sheet 2 of 57)

| FROM | TO | NAME |
|---|---|---|
| E1 | J10-13,14 J12-15, J13-15, J14-31 | EXT MOD IN |
| E2 | C1-1 R1-1 | FP MOD OUT |
| E3 | C2-1 R2-1 | DEMOD OUT |
| E4 | | |
| E6 | J7-81,82 | SPKR AUDIO |
| E8 | J15-1 | EXT IN |
| E9 | J3-33,34 S1-9 NE1-1 V1-1 | AC HOT |
| E10 | J3-29,30, S1-2,6, NE2-2, V2-2 | AC NEUT |
| E11 | GND | AC GND |
| E12 | J3-11,12 | BATT CHG |
| E13 | J6-7,8,9,10,11,12,13,14 J4-9,10 J7-97 | DC IN |
| E14 | GND | DC GND |
| E15 | J9-39,40 | 10 MHZ REF |
| **HIGH VOLTAGE SUPPLY** | | |
| J1-1 | GND | GND |
| J1-2 | GND | GND |
| J1-3 | J2-46 | HV REFERENCE |
| J1-4 | J2-46 | HV REFERENCE |
| J1-5 | J4-17,18 | $\overline{\text{HV CHOPPER DR}}$ |
| J1-6 | J4-17,18 | $\overline{\text{HV CHOPPER DR}}$ |
| J1-7 | J4-19,20 | HV CHOPPER DR |
| J1-8 | J4-19,20 | HV CHOPPER DR |
| J1-9 | | |
| J1-10 | | |
| J1-11 | +12V | +12V |
| J1-12 | +12V | +12V |
| J1-13 | | |
| J1-14 | | |
| J1-15 | | |
| J1-16 | | |
| J1-17 | GND | GND |
| J1-18 | GND | GND |
| J1-19 | | |
| J1-20 | | |

Table 5-1. System Motherboard Wirelist (Sheet 3 of 57)

| FROM | TO | NAME |
|---|---|---|
| J1-21 | J2-21 | INTENSITY TV |
| J1-22 | J2-21 | INTENSITY TV |
| J1-23 | J2-55 | ASTIGMATISM |
| J1-24 | J2-55 | ASTIGMATISM |
| J1-25 | J2-57 | GEOMETRY |
| J1-26 | J2-57 | GEOMETRY |
| J1-27 | J2-26 | INTEN SAMPLE V |
| J1-28 | J2-26 | INTEN SAMPLE V |
| J1-29 | J2-3 | CRT Z-AXIS |
| J1-30 | J2-3 | CRT Z-AXIS |
| J1-31 | J2-54 | FOCUS SAMPLE V |
| J1-32 | J2-54 | FOCUS SAMPLE V |
| J1-33 | J2-28 | FOCUS TV |
| J1-34 | J2-28 | FOCUS TV |
| J1-35 | GND | GND |
| J1-36 | GND | GND |
| **SCOPE AMPLIFIER MODULE** | | |
| J2-1 | GND | GND |
| J2-2 | GND | GND |
| J2-3 | J1-29,30 | CRT Z-AXIS |
| J2-4 | | |
| J2-5 | | |
| J2-6 | | |
| J2-7 | J7-18 | SCOPE SWP CNTL 2 |
| J2-8 | | |
| J2-9 | J7-16 | SCOPE SWP CNTL 1 |
| J2-10 | J7-40 | HORIZ TIME BASE EN |
| J2-11 | J7-14 | SCOPE SWP CNTL 0 |
| J2-12 | J7-72 | INT SCOPE HORIZ |
| J2-13 | J7-88 | SWEEP BLANKING |
| J2-14 | J7-84 | SCOPE MODE ENABLE |
| J2-15 | J7-39 | EXT HORIZ ENABLE |
| J2-16 | | |

Table 5-1. System Motherboard Wirelist (Sheet 4 of 57)

| FROM | TO | NAME |
|---|---|---|
| J2-17 | J15-50 | HORIZ TO SCOPE AMP |
| J2-18 | | |
| J2-19 | J7-20 | SCOPE SWP CNTL 3 |
| J2-20 | J7-12 | TRIG PULSE |
| J2-21 | J1-21,22 | INTENSITY TV |
| J2-22 | J7-76 | $\overline{\text{SYNC PRESENT}}$ |
| J2-23 | J7-90 | $\overline{\text{SCOPE-AXIS}}$ |
| J2-24 | P1-34 | AUTO/NOR TRIG SEL |
| J2-25 | | |
| J2-26 | J1-27,28 | INTENSITY SAMPLE VOLT |
| J2-27 | | |
| J2-28 | J1-33,34 | FOCUS TV |
| J2-29 | J7-58 | −8V |
| J2-30 | J7-58 | −8V |
| J2-31 | J7-56 P1-15 | +8V |
| J2-32 | J7-56 P1-15 | +8V |
| J2-33 | −12V | −12V |
| J2-34 | −12V | −12V |
| J2-35 | +12V | +12V |
| J2-36 | +12V | +12V |
| J2-37 | +33V | +33V |
| J2-38 | +33V | +33V |
| J2-39 | −5V | −5V |
| J2-40 | −5V | −5V |
| J2-41 | +5V | +5V |

Table 5-1. System Motherboard Wirelist (Sheet 5 of 57)

| FROM | TO | NAME |
|---|---|---|
| J2-42 | +5V | +5V |
| J2-43 | P1-11 | INTENSITY LEVEL |
| J2-44 | | |
| J2-45 | P1-25,26 | HORIZ POSITION |
| J2-46 | J1-3,4 | HIGH VOLTAGE REF |
| J2-47 | | |
| J2-48 | J7-74 | VERT TO SCOPE AMP |
| J2-49 | | |
| J2-50 | J20-2 | TRACE ROTATION |
| J2-51 | | |
| J2-52 | | |
| J2-53 | P1-16 | SWEEP VERNIER VOLT |
| J2-54 | J1-31,32 | FOCUS SAMPLE VOLT |
| J2-55 | J1-23,24 | ASTIGMATISM |
| J2-56 | | |
| J2-57 | J1-25,26 | GEOMETRY |
| J2-58 | | |
| J2-59 | P1-10 | FOCUS LEVEL |
| J2-60 | | |
| J2-61 | | |
| J2-62 | | |
| J2-63 | +110V | +110V |
| J2-64 | +110V | +110V |
| J2-65 | | |
| J2-66 | | |
| J2-67 | −110V | −110V |

Table 5-1. System Motherboard Wirelist (Sheet 6 of 57)

| FROM | TO | NAME |
|---|---|---|
| J2-68 | −110V | |
| J2-69 | | |
| J2-70 | | |
| J2-71 | GND | GND |
| J2-72 | GND | GND |
| **BATTERY CHARGER MODULE** | | |
| J3-1 | GND | GND |
| J3-2 | GND | GND |
| J3-3 | GND | GND |
| J3-4 | GND | GND |
| J3-5 | +5V | +5V |
| J3-6 | +5V | +5V |
| J3-7 | +5V | +5V |
| J3-8 | +5V | +5V |
| J3-9 | J4-24, J15-94 J12,13-20 | $\overline{\text{PWR ON}}$ |
| J3-10 | | |
| J3-11 | E12 | BATT CHG |
| J3-12 | E12 | BATT CHG |
| J3-13 | J4-26 | AC VOLTAGE SENSE |
| J3-14 | | |
| J3-15 | J16-1 J4-34,36 | FREQ STD SUPPLY |
| J3-16 | J16-1 J4-34,36 | FREQ STD SUPPLY |
| J3-17 | −12V | −12V |
| J3-18 | J9-45,46 | −5V TO SYNTH |
| J3-19 | | BLANK FOR ISOLATION |

Table 5-1. System Motherboard Wirelist (Sheet 7 of 57)

| FROM | TO | NAME |
|---|---|---|
| J3-20 | | BLANK FOR ISOLATION |
| J3-21 | | BLANK FOR ISOLATION |
| J3-22 | | BLANK FOR ISOLATION |
| J3-23 | | BLANK FOR ISOLATION |
| J3-24 | | BLANK FOR ISOLATION |
| J3-25 | | BLANK FOR ISOLATION |
| J3-26 | | BLANK FOR ISOLATION |
| J3-27 | | BLANK FOR ISOLATION |
| J3-28 | | BLANK FOR ISOLATION |
| J3-29 | E10 S1-2,6 NE2-2 V2-2 | AC NEUT |
| J3-30 | E10 S1-2,6 NE2-2 V2-2 | AC NEUT |
| J3-31 | S1-8 V2-1 NE2-1 | PRIMARY #2 |
| J3-32 | S1-8 V2-1 NE2-1 | PRIMARY #2 |
| J3-33 | E9 S1-9 NE1-1 V1-1 | AC HOT |
| J3-34 | E9 S1-9 NE1-1 V1-1 | AC HOT |
| J3-35 | S1-5 NE1-2 V1-2 | PRIMARY #1 |
| J3-36 | S1-5 NE1-2 V1-2 | PRIMARY #1 |
| J3-37 | S1-1 | 220 LOW |
| J3-38 | S1-1 | 220 LOW |
| J3-39 | J6-47,48 | $V_c-$ |
| J3-40 | J6-47,48 | $V_c-$ |
| J3-41 | S1-3 J6-53,54 | 110 LOW |
| J3-42 | S1-3 J6-53,54 | 110 LOW |
| J3-43 | J6-55,56 | $V_c+$ |

Table 5-1. System Motherboard Wirelist (Sheet 8 of 57)

| FROM | TO | NAME |
|---|---|---|
| J3-44 | J6-55,56 | $V_c+$ |
| J3-45 | | BLANK FOR ISOLATION |
| J3-46 | | BLANK FOR ISOLATION |
| J3-47 | | BLANK FOR ISOLATION |
| J3-48 | | BLANK FOR ISOLATION |
| J3-49 | | BLANK FOR ISOLATION |
| J3-50 | | BLANK FOR ISOLATION |
| **POWER SUPPLY CONTROL MODULE** | | |
| J4-1 | GND | GND |
| J4-2 | GND | GND |
| J4-3 | GND | GND |
| J4-4 | GND | GND |
| J4-5 | J6-5 | DC CURR SENSE RTN |
| J4-6 | J6-5 | DC CURR SENSE RTN |
| J4-7 | J6-6 | DC CURR SENSE |
| J4-8 | J6-6 | DC CURR SENSE |
| J4-9 | J6-7,8,9,10,11,12,13,14 E13 J7-97 | DC IN |
| J4-10 | J6-7,8,9,10,11,12,13,14 E13 J7-97 | DC IN |
| J4-11 | +12V | +12V |
| J4-12 | −12V | −12V |
| J4-13 | +5V | +5V |
| J4-14 | +5V | +5V |
| J4-15 | −5V | −5V |
| J4-16 | −5V | −5V |
| J4-17 | J1-5,6 | $\overline{\text{HV CHOPPER DR}}$ |
| J4-18 | J1-5,6 | $\overline{\text{HV CHOPPER DR}}$ |

Table 5-1. System Motherboard Wirelist (Sheet 9 of 57)

| FROM | TO | NAME |
|---|---|---|
| J4-19 | J1-7,8 | HV CHOPPER DR |
| J4-20 | J1-7,8 | HV CHOPPER DR |
| J4-21 | J6-15,16 | DC BUS |
| J4-22 | J6-15,16 | DC BUS |
| J4-23 | J15-91 | $\overline{\text{PWR OFF}}$ |
| J4-24 | J15-94 J3-9 J12,13-20 | $\overline{\text{PWR ON}}$ |
| J4-25 | J15-97 | AC LED |
| J4-26 | J3-13 | AC VOLTAGE SENSE |
| J4-27 | J6-32 | $\overline{\text{DC DRIVE}}$ |
| J4-28 | J6-32 | $\overline{\text{DC DRIVE}}$ |
| J4-29 | J6-33 | DC DRIVE |
| J4-30 | J6-33 | DC DRIVE |
| J4-31 | J6-34 | $\overline{\text{RELAY ON}}$ |
| J4-32 | J6-34 | $\overline{\text{RELAY ON}}$ |
| J4-33 | J6-35 | $\overline{\text{AC DRIVE}}$ |
| J4-34 | J3-15,16 J16-1 | FREQ STD SUPPLY |
| J4-35 | J6-36 | AC DRIVE |
| J4-36 | J16-1 J3-15,16 | FREQ STD SUPPLY |
| J4-37 | J15-98 | DC LED |
| J4-38 | J5-34 | AC CURRENT SENSE |
| J4-39 | J5-35 | $\overline{\text{AC CURRENT SENSE}}$ |
| J4-40 | GND | GND |
| J4-41 | GND | GND |
| J4-42 | GND | GND |
| J4-43 | | |
| J4-44 | | |

Table 5.1. System Motherboard Wirelist (Sheet 10 of 57)

| FROM | TO | NAME |
|---|---|---|
| J4-45 | | |
| J4-46 | | |
| J4-47 | | |
| J4-48 | | |
| J4-49 | | |
| J4-50 | | |
| **POWER SUPPLY OUTPUT MODULE** | | |
| J5-1 | GND | GND |
| J5-2 | GND | GND |
| J5-3 | GND | GND |
| J5-4 | GND | GND |
| J5-5 | +12V | +12V |
| J5-6 | +12V | +12V |
| J5-7 | +12V | +12V |
| J5-8 | +5V | +5V |
| J5-9 | +5V | +5V |
| J5-10 | +5V | +5V |
| J5-11 | −5V | −5V |
| J5-12 | −5V | −5V |
| J5-13 | −12V | −12V |
| J5-14 | −12V | −12V |
| J5-15 | J6-17,18,19,20 | XFMR DR DC |
| J5-16 | J6-17,18,19,20 | XFMR DR DC |
| J5-17 | J6-17,18,19,20 | XFMR DR DC |

Table 5.1. System Motherboard Wirelist (Sheet 11 of 57)

| FROM | TO | NAME |
|---|---|---|
| J5-18 | J6-17,18,19,20 | XFMR DR DC |
| J5-19 | J6-21,22,23,24,25,26,27 | DC CT |
| J5-20 | J6-21,22,23,24,25,26,27 | DC CT |
| J5-21 | J6-21,22,23,24,25,26,27 | DC CT |
| J5-22 | J6-21,22,23,24,25,26,27 | DC CT |
| J5-23 | J6-21,22,23,24,25,26,27 | DC CT |
| J5-24 | J6-21,22,23,24,25,26,27 | DC CT |
| J5-25 | J6-21,22,23,24,25,26,27 | DC CT |
| J5-26 | J6-28,29,30,31 | $\overline{\text{XFMR DR DC}}$ |
| J5-27 | J6-28,29,30,31 | $\overline{\text{XFMR DR DC}}$ |
| J5-28 | J6-28,29,30,31 | $\overline{\text{XFMR DR DC}}$ |
| J5-29 | J6-28,29,30,31 | $\overline{\text{XFMR DR DC}}$ |
| J5-30 | −110V | −110V |
| J5-31 | +33V | +33V |
| J5-32 | +33V | +33V |
| J5-33 | +110V | +110V |
| J5-34 | J4-38 | AC CURRENT SENSE |
| J5-35 | J4-39 | $\overline{\text{AC CURRENT SENSE}}$ |
| J5-36 | GND | GND |
| J5-37 | GND | GND |
| J5-38 | GND | GND |
| J5-39 | | BLANK FOR ISOLATION |
| J5-40 | | BLANK FOR ISOLATION |
| J5-41 | | BLANK FOR ISOLATION |
| J5-42 | | BLANK FOR ISOLATION |

Table 5.1. System Motherboard Wirelist (Sheet 12 of 57)

| FROM | TO | NAME |
|---|---|---|
| J5-43 | | BLANK FOR ISOLATION |
| J5-44 | | BLANK FOR ISOLATION |
| J5-45 | | BLANK FOR ISOLATION |
| J5-46 | | BLANK FOR ISOLATION |
| J5-47 | J6-49,50 | $\overline{\text{XFMR DR AC}}$ |
| J5-48 | J6-49,50 | $\overline{\text{XFMR DR AC}}$ |
| J5-49 | J6-51,52 | XFMR DR AC |
| J5-50 | J6-51,52 | XFMR DR AC |
| **POWER SUPPLY SWITCHER MODULE** | | |
| J6-1 | GND | GND |
| J6-2 | GND | GND |
| J6-3 | GND | GND |
| J6-4 | GND | GND |
| J6-5 | J4-5,6 | DC CURR SENSE RTN |
| J6-6 | J4-7,8 | DC CURR SENSE |
| J6-7 | E13 J4-9,10 J7-97 | DC IN |
| J6-8 | E13 J4-9,10 J7-97 | DC IN |
| J6-9 | E13 J4-9,10 J7-97 | DC IN |
| J6-10 | E13 J4-9,10 J7-97 | DC IN |
| J6-11 | E13 J4-9,10 J7-97 | DC IN |
| J6-12 | E13 J4-9,10 J7-97 | DC IN |
| J6-13 | E13 J4-9,10 J7-97 | DC IN |
| J6-14 | E13 J4-9,10 J7-97 | DC IN |
| J6-15 | J4-21,22 | DC BUS |
| J6-16 | J4-21,22 | DC BUS |

Table 5.1. System Motherboard Wirelist (Sheet 13 of 57)

| FROM | TO | NAME |
|---|---|---|
| J6-17 | J5-15,16,17,18 | XFMR DR DC |
| J6-18 | J5-15,16,17,18 | XFMR DR DC |
| J6-19 | J5-15,16,17,18 | XFMR DR DC |
| J6-20 | J5-15,16,17,18 | XFMR DR DC |
| J6-21 | J5-19,20,21,22,23,24,25 | DC CT |
| J6-22 | J5-19,20,21,22,23,24,25 | DC CT |
| J6-23 | J5-19,20,21,22,23,24,25 | DC CT |
| J6-24 | J5-19,20,21,22,23,24,25 | DC CT |
| J6-25 | J5-19,20,21,22,23,24,25 | DC CT |
| J6-26 | J5-19,20,21,22,23,24,25 | DC CT |
| J6-27 | J5-19,20,21,22,23,24,25 | DC CT |
| J6-28 | J5-26,27,28,29 | $\overline{\text{XFMR DR DC}}$ |
| J6-29 | J5-26,27,28,29 | $\overline{\text{XFMR DR DC}}$ |
| J6-30 | J5-26,27,28,29 | $\overline{\text{XFMR DR DC}}$ |
| J6-31 | J5-26,27,28,29 | $\overline{\text{XFMR DR DC}}$ |
| J6-32 | J4-27,28 | $\overline{\text{DC DRIVE}}$ |
| J6-33 | J4-29,30 | DC DRIVE |
| J6-34 | J4-31,32 | $\overline{\text{RELAY ON}}$ |
| J6-35 | J4-33 | $\overline{\text{AC DRIVE}}$ |
| J6-36 | J4-35 | AC DRIVE |
| J6-37 | GND | GND |
| J6-38 | GND | GND |
| J6-39 | | BLANK FOR ISOLATION |
| J6-40 | | BLANK FOR ISOLATION |
| J6-41 | | BLANK FOR ISOLATION |
| J6-42 | | BLANK FOR ISOLATION |
| J6-43 | | BLANK FOR ISOLATION |

Table 5.1. System Motherboard Wirelist (Sheet 14 of 57)

| FROM | TO | NAME |
|---|---|---|
| J6-44 | | BLANK FOR ISOLATION |
| J6-45 | | BLANK FOR ISOLATION |
| J6-46 | | BLANK FOR ISOLATION |
| J6-47 | J3-39,40 | $V_c^-$ |
| J6-48 | J3-39,40 | $V_c^-$ |
| J6-49 | J5-47,48 | $\overline{\text{XFMR DR AC}}$ |
| J6-50 | J5-47,48 | $\overline{\text{XFMR DR AC}}$ |
| J6-51 | J5-49,50 | XFMR DR AC |
| J6-52 | J5-49,50 | XFMR DR AC |
| J6-53 | S1-3 J3-41,42 | 110 LOW |
| J6-54 | S1-3 J3-41,42 | 110 LOW |
| J6-55 | J3-43,44 | $V_c^+$ |
| J6-56 | J3-43,44 | $V_c^+$ |
| J6-57 | | BLANK FOR ISOLATION |
| J6-58 | | BLANK FOR ISOLATION |
| J6-59 | | BLANK FOR ISOLATION |
| J6-60 | | BLANK FOR ISOLATION |
| **SCOPE/DVM CONTROL MODULE** | | |
| J7-1 | GND | DVM GND |
| J7-2 | GND | DVM GND |
| J7-3 | J11-3 | EXT DVM TO A/D |
| J7-4 | J14-16 J15-20 | VERT FROM RNG SW |
| J7-5 | P1-37,38 | TRIG LVL |
| J7-6 | J15-22 | DVM FROM RNG SW |
| J7-7 | J11-5 | INT DVM TO A/D |
| J7-8 | J17-10 | RF INPUT PWR |
| J7-9 | | |
| J7-10 | J14-19 | VERT CHAR SYNC |
| J7-11 | | |
| J7-12 | J2-20 | TRIG PULSE |
| J7-13 | J10-3,4 J11-13 J15-62 | AF ADD BUS 0 |
| J7-14 | J2-11 | SCOPE SWP CNTL 0 |
| J7-15 | J10-5,6 J11-15 J15-63 | AF ADD BUS 1 |
| J7-16 | J2-9 | SCOPE SWP CNTL 1 |

Table 5.1. System Motherboard Wirelist (Sheet 15 of 57)

| FROM | TO | NAME |
|---|---|---|
| J7-17 | J10-7,8 J11-17 J15-64 | AF ADD BUS 2 |
| J7-18 | J2-7 | SCOPE SWP CNTL 2 |
| J7-19 | J10-9,10 J11-19 J15-65 | AF ADD BUS 3 |
| J7-20 | J2-19 | SCOPE SWP CNTL 3 |
| J7-21 | | |
| J7-22 | J14-22 | $\overline{\text{CHAR GEN RST}}$ |
| J7-23 | | |
| J7-24 | | |
| J7-25 | | |
| J7-26 | | |
| J7-27 | J8-17 | SPECT ANA VERT |
| J7-28 | | |
| J7-29 | J10-15,16 J11-29,30 J15-66 | AF DATA BUS 3 |
| J7-30 | | |
| J7-31 | J10-17,18 J11-31,32 J15-67 | AF DATA BUS 2 |
| J7-32 | | |
| J7-33 | J10-19,20 J11-33,34 J15-68 | AF DATA BUS 1 |
| J7-34 | | |
| J7-35 | J10-21,22 J11-35,36 J15-70 | AF DATA BUS 0 |
| J7-36 | | |
| J7-37 | | |
| J7-38 | J17-9 | ANT EN |
| J7-39 | J2-15 | EXT HORIZ EN |
| J7-40 | J2-10 | HORIZ TIME BASE EN |
| J7-41 | | |
| J7-42 | | |

Table 5.1. System Motherboard Wirelist (Sheet 16 of 57)

| FROM | TO | NAME |
|---|---|---|
| J7-43 | | |
| J7-44 | J14-44 | $\overline{\text{LINE 1}}$ |
| J7-45 | +5V | +5V |
| J7-46 | +5V | +5V |
| J7-47 | −5V | −5V |
| J7-48 | −5V | −5V |
| J7-49 | +33V | +33V |
| J7-50 | +33V | +33V |
| J7-51 | +12V | +12V |
| J7-52 | +12V | +12V |
| J7-53 | −12V | −12V |
| J7-54 | −12V | −12V |
| J7-55 | J17-15 | EXT FWD PWR |
| J7-56 | J2-31,32 P1-15 | +8V |
| J7-57 | J17-17 | EXT RFL PWR |
| J7-58 | J2-29,30 | −8V |
| J7-59 | J17-21 | CARRIER + MOD LVL |
| J7-60 | J12-44 J13-44 J15-24 | INT SCOPE TO RNG SW |
| J7-61 | P1-17,18 | DISPERSION SWP RTN |
| J7-62 | | |
| J7-63 | P1-21,22 | DISPERSION SWP |
| J7-64 | | |
| J7-65 | P2-3 | VOL CNTL AUDIO RTN |
| J7-66 | | |
| J7-67 | | |
| J7-68 | J10-27,28 J14-18 | $\overline{\text{AF BUS EN1}}$ |

Table 5.1. System Motherboard Wirelist (Sheet 17 of 57)

| FROM | TO | NAME |
|---|---|---|
| J7-69 | J10-49,50 | MOD CAL AUDIO |
| J7-70 | | |
| J7-71 | | |
| J7-72 | J2-12 | INT SCOPE HORIZ |
| J7-73 | | |
| J7-74 | J2-48 | VERT TO SCOPE AMP |
| J7-75 | | |
| J7-76 | J2-22 | $\overline{\text{SYNC PRESENT}}$ |
| J7-77 | | |
| J7-78 | J8-19 | SIG STRENGTH VOLTAGE |
| J7-79 | J8-67 J12-19 J13-19 | DEMOD CAL AUDIO |
| J7-80 | P2-27 | HOST AUDIO |
| J7-81 | E6 | SPKR AUDIO |
| J7-82 | E6 | SPKR AUDIO |
| J7-83 | J14-20 | HORIZ CHAR SYNC |
| J7-84 | J2-14 | SCOPE MODE EN |
| J7-85 | | |
| J7-86 | | |
| J7-87 | J14-21 | CHAR GEN Z-AXIS |
| J7-88 | J2-13 | SWP BLANKING |
| J7-89 | | |
| J7-90 | J2-23 | $\overline{\text{SCOPE Z-AXIS}}$ |
| J7-91 | J8-70 | 700 KHZ IF |
| J7-92 | J8-72 | GND |
| J7-93 | | |
| J7-94 | | |

Table 5.1. System Motherboard Wirelist (Sheet 18 of 57)

| FROM | TO | NAME |
|---|---|---|
| J7-95 | J11-67 | 100 HZ REF |
| J7-96 | | |
| J7-97 | E13 J4-9,10 J6-7,8,9,10,11,12,13,14 | DC IN |
| J7-98 | | |
| J7-99 | GND | GND |
| J7-100 | GND | GND |
| **RECEIVER MODULE** | | |
| J8-1 | GND | GND |
| J8-2 | GND | GND |
| J8-3 | | |
| J8-4 | | |
| J8-5 | | |
| J8-6 | | |
| J8-7 | | |
| J8-8 | | |
| J8-9 | | |
| J8-10 | | |
| J8-11 | GND | |
| J8-12 | GND | |
| J8-13 | GND | |
| J8-14 | GND | |
| J8-15 | J9-17,18 J11-8 | SYNTH 10 MHz |
| J8-16 | | |
| J8-17 | J7-27 | SPECT ANA VERT |
| J8-18 | | |

Table 5.1. System Motherboard Wirelist (Sheet 19 of 57)

| FROM | TO | NAME |
|---|---|---|
| J8-19 | J7-78 | SIG STRENGTH VOLTAGE |
| J8-20 | | |
| J8-21 | | |
| J8-22 | | |
| J8-23 | | |
| J8-24 | | |
| J8-25 | | |
| J8-26 | | |
| J8-27 | P2-18 | BFO FREQ CNTL |
| J8-28 | | |
| J8-29 | P2-2 | SQUELCH LEVEL |
| J8-30 | | |
| J8-31 | +5V | +5V |
| J8-32 | +5V | +5V |
| J8-33 | −5V | −5V |
| J8-34 | −5V | −5V |
| J8-35 | +33V | N.C. |
| J8-36 | +33V | N.C. |
| J8-37 | +12V | +12V |
| J8-38 | +12V | +12V |
| J8-39 | −12V | −12V |
| J8-40 | −12V | −12V |
| J8-41 | | |
| J8-42 | | |
| J8-43 | | |
| J8-44 | | |

Table 5.1. System Motherboard Wirelist (Sheet 20 of 57)

| FROM | TO | NAME |
|---|---|---|
| J8-45 | J11-41,42 | SYS CNTL DATA |
| J8-46 | | |
| J8-47 | J9-3,4 J11-49 J17-6 | DATA CL |
| J8-48 | | |
| J8-49 | J9-5,6 J11-43,44 J17-7 | DATA LATCH |
| J8-50 | | |
| J8-51 | | |
| J8-52 | | |
| J8-53 | | |
| J8-54 | | |
| J8-55 | J9-11,12 | SYNTH CNTL DATA |
| J8-56 | | |
| J8-57 | J15-38 | WB SIG PRES |
| J8-58 | J15-30 | $\overline{\text{IF OVERLOAD}}$ |
| J8-59 | J15-32 | SIGNAL PRESENT |
| J8-60 | P2-17 | SIG PRES LED |
| J8-61 | | |
| J8-62 | J10-47,48 J12-22 J13-22 P2-4 | VOL CNTL AUDIO |
| J8-63 | | |
| J8-64 | R2-2 | DEMOD OUT |
| J8-65 | J11-65 | IF/BFO FREQ |
| J8-66 | | |
| J8-67 | J1-79 J12-19 J13-19 | DEMOD CAL AUDIO |
| J8-68 | | |
| J8-69 | | |
| J8-70 | J7-91 | 700 KHZ IF |

Table 5.1. System Motherboard Wirelist (Sheet 21 of 57)

| FROM | TO | NAME |
|---|---|---|
| J8-71 | GND | GND |
| J8-72 | GND J7-92 | GND |
| **RF SYNTHESIZER MODULE** | | |
| J9-1 | GND | GND |
| J9-2 | GND | GND |
| J9-3 | J8-47 J11-49 J17-6 | DATA CL |
| J9-4 | J8-47 J11-49 J17-6 | DATA CL |
| J9-5 | J8-49 J11-43,44 J17-7 | DATA LATCH |
| J9-6 | J8-49 J11-43,44 J17-7 | DATA LATCH |
| J9-7 | J11-37,38 | 24 CNTL DATA |
| J9-8 | J11-37,38 | 24 CNTL DATA |
| J9-9 | J11-39,40 | 60.5 CNTL DATA |
| J9-10 | J11-39,40 | 60.5 CNTL DATA |
| J9-11 | J8-55 | SYNTH CNTL DATA |
| J9-12 | J8-55 | SYNTH CNTL DATA |
| J9-13 | J11-57 | 310-440 CNTL DATA |
| J9-14 | J11-57 | 310-44 CNTL DATA |
| J9-15 | J17-16 | WB AMP LO/HI |
| J9-16 | J17-16 | WB AMP LO/HI |
| J9-17 | J11-8 J8-15 | SYNTH 10 MHZ |
| J9-18 | J11-8 J8-15 | SYNTH 10 MHZ |
| J9-19 | GND | GND |
| J9-20 | GND | GND |
| J9-21 | GND | GND |
| J9-22 | GND | GND |

Table 5.1. System Motherboard Wirelist (Sheet 22 of 57)

| FROM | TO | NAME |
|---|---|---|
| J9-23 | GND | GND |
| J9-24 | GND | GND |
| J9-25 | P1-19,20 | SYNTH SWEEP |
| J9-26 | P1-19,20 | SYNTH SWEEP |
| J9-27 | GND | GND |
| J9-28 | GND | GND |
| J9-29 | J10-55,56 | SYNTH FM |
| J9-30 | J10-55,56 | SYNTH FM |
| J9-31 | GND | GND |
| J9-32 | GBD | GND |
| J9-33 | J17-13 | 0.01-1 AGC |
| J9-34 | J17-13 | 0.01-1 AGC |
| J9-35 | GND | GND |
| J9-36 | GND | GND |
| J9-37 | GND | GND |
| J9-38 | GND | GND |
| J9-39 | E15 | 10 MHZ REF |
| J9-40 | E15 | 10 MHZ REF |
| J9-41 | GND | GND |
| J9-42 | GND | GND |
| J9-43 | +5V | +5V |
| J9-44 | +5V | +5V |
| J9-45 | J3-18 | −5V TO SYNTH |
| J9-46 | J3-18 | −5V TO SYNTH |
| J9-47 | +33V | +33V |
| J9-48 | +33V | +33V |

Table 5.1. System Motherboard Wirelist (Sheet 23 of 57)

| FROM | TO | NAME |
|---|---|---|
| J9-49 | +12V | +12V |
| J9-50 | +12V | +12V |
| J9-51 | −12V | −12V |
| J9-52 | −12V | −12V |
| J9-53 | GND | GND |
| J9-54 | GND | GND |
| J9-55 | GND | GND |
| J9-56 | GND | GND |
| J9-57 | GND | GND |
| J9-58 | GND | GND |
| J9-59 | GND | GND |
| J9-60 | GND | GND |
| J9-61 | GND | GND |
| J9-62 | GND | GND |
| J9-63 | GND | GND |
| J9-64 | GND | GND |
| J9-65 | GND | GND |
| J9-66 | GND | GND |
| J9-67 | GND | GND |
| J9-68 | GND | GND |
| J9-69 | GND | GND |
| J9-70 | GND | GND |
| J9-71 | GND | GND |
| J9-72 | GND | GND |

Table 5.1. System Motherboard Wirelist (Sheet 24 of 57)

| FROM | TO | NAME |
|---|---|---|
| **AUDIO SYNTHESIZER MODULE** | | |
| J10-1 | GND | GND |
| J10-2 | GND | GND |
| J10-3 | J7-13 J11-13 J15-62 | AF ADD BUS 0 |
| J10-4 | J7-13 J11-13 J15-62 | AF ADD BUS 0 |
| J10-5 | J7-15 J11-15 J15-63 | AF ADD BUS 1 |
| J10-6 | J7-15 J11-15 J15-63 | AF ADD BUS 1 |
| J10-7 | J7-17 J11-17 J15-64 | AF ADD BUS 2 |
| J10-8 | J7-17 J11-17 J15-64 | AF ADD BUS 2 |
| J10-9 | J7-19 J11-19 J15-65 | AF ADD BUS 3 |
| J10-10 | J7-19 J11-19 J15-65 | AF ADD BUS 3 |
| J10-11 | J12-13 J13-13, P2-29 | MIC IN |
| J10-12 | J12-13 J13-13, P2-29 | MIC IN |
| J10-13 | E1 J12-15 J13-15 J14-31 | EXT MOD IN |
| J10-14 | E1 J12-15 J13-15 J14-31 | EXT MOD IN |
| J10-15 | J7-29 J11-29,30 J15-66 | AF DATA BUS 3 |
| J10-16 | J7-29 J11-29,30 J15-66 | AF DATA BUS 3 |
| J10-17 | J7-31 J11-31,32 J15-67 | AF DATA BUS 2 |
| J10-18 | J7-31 J11-31,32 J15-67 | AF DATA BUS 2 |
| J10-19 | J7-33 J11-33,34 J15-68 | AF DATA BUS 1 |
| J10-20 | J7-33 J11-33,34 J15-68 | AF DATA BUS 1 |
| J10-21 | J7-35 J11-35,36 J15-70 | AF DATA BUS 0 |
| J10-22 | J7-35 J11-35,36 J15-70 | AF DATA BUS 0 |
| J10-23 | J12-34 J13-34 P2-58 | EXT MOD (I) |
| J10-24 | J12-34 J13-34 P2-58 | EXT MOD (I) |
| J10-25 | J12-40 J13-40 P2-47,48 | INT MOD (I) |

Table 5.1. System Motherboard Wirelist (Sheet 25 of 57)

| FROM | TO | NAME |
|---|---|---|
| J10-26 | J12-40 J13-40 P2-47,48 | INT MOD (I) |
| J10-27 | J7-68 J14-18 | $\overline{\text{AF BUS EN 1}}$ |
| J10-28 | J7-68 J14-18 | $\overline{\text{AF BUS EN 1}}$ |
| J10-29 | J14-29 | BINARY MOD |
| J10-30 | | |
| J10-31 | +5V | +5V |
| J10-32 | +5V | +5V |
| J10-33 | −5V | −5V |
| J10-34 | −5V | −5V |
| J10-35 | +33V | +33V |
| J10-36 | +33V | +33V |
| J10-37 | +12V | +12V |
| J10-38 | +12V | +12V |
| J10-39 | −12V | −12V |
| J10-40 | −12V | −12V |
| J10-41 | J11-11 | SYNTH 1 KHZ |
| J10-42 | J11-11 | SYNTH 1 KHZ |
| J10-43 | R1-2 | FP MOD OUT |
| J10-44 | R1-2 | FP MOD OUT |
| J10-45 | J12-28 J13-28 P2-55 | 1 KHZ SINE (I) |
| J10-46 | J12-28 J13-28 P2-55 | 1 KHZ SINE (I) |
| J10-47 | J8-62 J12-22 J13-22 P2-4 | VOL CNTL AUDIO |
| J10-48 | J8-62 J12-22 J13-22 P2-4 | VOL CNTL AUDIO |
| J10-49 | J7-69 | MOD CAL AUDIO |
| J10-50 | J7-69 | MOD CAL AUDIO |
| J10-51 | J17-19 | DSBSC MOD |

Table 5.1. System Motherboard Wirelist (Sheet 26 of 57)

| FROM | TO | NAME |
|---|---|---|
| J10-52 | J17-19 | DSBSC MOD |
| J10-53 | | |
| J10-54 | | |
| J10-55 | J9-29,30 | SYNTH FM |
| J10-56 | J9-29,30 | SYNTH FM |
| J10-57 | | |
| J10-58 | | |
| J10-59 | J17-18 | OFFSET MOD |
| J10-60 | J17-18 | OFFSET MOD |
| J10-61 | P1-8 J12-6 J13-6 | 5 VDC + AM MOD |
| J10-62 | P1-8 J12-6 J13-6 | 5 VDC + AM MOD |
| J10-63 | J12-43 J13-43 | INT MOD RTN |
| J10-64 | J12-43 J13-43 | INT MOD RTN |
| J10-65 | J12-37 J13-37 | EXT MOD RTN |
| J10-66 | J12-37 J13-37 | EXT MOD RTN |
| J10-67 | J12-31 J13-31 | 1 KHZ SINE RTN |
| J10-68 | J12-31 J13-31 | 1 KHZ SINE RTN |
| J10-69 | | |
| J10-70 | | |
| J10-71 | GND | GND |
| J10-72 | GND | GND |
| **PROCESSOR INTERFACE MODULE** | | |
| J11-1 | GND | GND |
| J11-2 | GND | GND |

Table 5.1. System Motherboard Wirelist (Sheet 27 of 57)

| FROM | TO | NAME |
|---|---|---|
| J11-3 | J7-3 | EXT DVM TO A/D |
| J11-4 | J7-1,2 | DVM GND |
| J11-5 | J7-7 | INT DVM TO A/D |
| J11-6 | | |
| J11-7 | | |
| J11-8 | J9-17,18 J8-15 | SYNTH 10 MHZ |
| J11-9 | | |
| J11-10 | | |
| J11-11 | J10-41,42 | SYNTH 1 KHZ |
| J11-12 | GND | GND |
| J11-13 | J7-13 J10-3,4 J15-62 | AF ADD BUS 0 |
| J11-14 | | |
| J11-15 | J7-15 J10-5,6 J15-63 | AF ADD BUS 1 |
| J11-16 | GND | GND |
| J11-17 | J7-17 J10-7,8 J15-64 | AF ADD BUS 2 |
| J11-18 | | |
| J11-19 | J7-19 J10-9,10 J15-65 | AF ADD BUS 3 |
| J11-20 | | |
| J11-21 | | |
| J11-22 | | |
| J11-23 | | |
| J11-24 | | |
| J11-25 | | |
| J11-26 | | |
| J11-27 | | |

Table 5.1. System Motherboard Wirelist (Sheet 28 of 57)

| FROM | TO | NAME |
|---|---|---|
| J11-28 | | |
| J11-29 | J7-29 J10-15,16 J15-66 | AF DATA BUS 3 |
| J11-30 | J7-29 J10-15,16 J15-66 | AF DATA BUS 3 |
| J11-31 | J7-31 J10-17,18 J15-67 | AF DATA BUS 2 |
| J11-32 | J7-31 J10-17,18 J15-67 | AF DATA BUS 2 |
| J11-33 | J7-33 J10-19,20 J15-68 | AF DATA BUS 1 |
| J11-34 | J7-33 J10-19,20 J15-68 | AF DATA BUS 1 |
| J11-35 | J7-35 J10-21,22 J15-70 | AF DATA BUS 0 |
| J11-36 | J7-35 J10-21,22 J15-70 | AF DATA BUS 0 |
| J11-37 | J9-7,8 | 24 CNTL DATA |
| J11-38 | J9-7,8 | 24 CNTL DATA |
| J11-39 | J9-9,10 | 60.5 CNTL DATA |
| J11-40 | J9-9,10 | 60.5 CNTL DATA |
| J11-41 | J8-45 | SYS CNTL DATA |
| J11-42 | J8-45 | SYS CNTL DATA |
| J11-43 | J8-49 J9-5,6 J17-7 | DATA LATCH |
| J11-44 | J8-49 J9-5,6 J17-7 | DATA LATCH |
| J11-45 | +5V | +5V |
| J11-46 | +5V | +5V |
| J11-47 | −5V | −5V |
| J11-48 | −5V | −5V |
| J11-49 | J8-47 J9-3,4 J17-6 | DATA CL |
| J11-50 | | PA 0 |
| J11-51 | +12V | +12V |
| J11-52 | +12V | +12V |

Table 5.1. System Motherboard Wirelist (Sheet 29 of 57)

| FROM | TO | NAME |
|---|---|---|
| J11-53 | −12V | −12V |
| J11-54 | −12V | −12V |
| J11-55 | | |
| J11-56 | J17-8 | OFFSET DATA |
| J11-57 | J9-13,14 | 310-440 CNTL DATA |
| J11-58 | J12 J13 J14-58 | $\overline{\text{NMI}}$ |
| J11-59 | | |
| J11-60 | J12-55 J13-55 | INT FREQ CNTR |
| J11-61 | J15-34 | EXT FREQ CNTR |
| J11-62 | | |
| J11-63 | J15-36 | $\overline{\text{EXT FREQ CNTR}}$ |
| J11-64 | | |
| J11-65 | J8-65 | IF/BFO FREQ |
| J11-66 | | |
| J11-67 | J7-95 | 100 HZ REF |
| J11-68 | J15-69 | $\overline{\text{AF BUS EN2}}$ |
| J11-69 | J12 J13 J14-69 | $\overline{\text{RESET}}$ |
| J11-70 | −70 | $\overline{\text{IRQ}}$ |
| J11-71 | −71 | A1 |
| J11-72 | −72 | A0 |
| J11-73 | −73 | A3 |
| J11-74 | −74 | A2 |
| J11-75 | −75 | A5 |
| J11-76 | −76 | A4 |
| J11-77 | J12 J13 J14-77 | A7 |

Table 5.1. System Motherboard Wirelist (Sheet 30 of 57)

| FROM | TO | NAME |
|---|---|---|
| J11-78 | J12 J13 J14-78 | A6 |
| J11-79 | −79 | A9 |
| J11-80 | −80 | A8 |
| J11-81 | −81 | A11 |
| J11-82 | −82 | A10 |
| J11-83 | −83 | A13 |
| J11-84 | −84 | A12 |
| J11-85 | −85 | A15 |
| J11-86 | −86 | A14 |
| J11-87 | −87 | $\overline{\text{I/O EN}}$ |
| J11-88 | −88 | E |
| J11-89 | −89 | Q |
| J11-90 | −90 | R/W |
| J11-91 | −91 | D1 |
| J11-92 | −92 | D0 |
| J11-93 | −93 | D3 |
| J11-94 | −94 | D2 |
| J11-95 | −95 | D5 |
| J11-96 | −96 | D4 |
| J11-97 | −97 | D7 |
| J11-98 | J12 J13 J14-98 | D6 |
| J11-99 | GND | GND |
| J11-100 | GND | GND |

Table 5.1. System Motherboard Wirelist (Sheet 31 of 57)

| FROM | TO | NAME |
|---|---|---|
| J12-1 | GND | GND |
| J12-2 | GND | GND |
| J12-3 | J13-3 P1-9 | AM MOD + DC REF (I) |
| J12-4 | J13-4 J17-14 | AM MOD + DC REF (O) |
| J12-5 | J14-4 | OPT A ENABLE |
| J12-6 | J10-61,62 J13-6 P1-8 | 5 VDC + AM MOD |
| J12-7 | – | RESERVED FOR SECURE COM |
| J12-8 | | |
| J12-9 | – | RESERVED FOR SECURE COM |
| J12-10 | – | RESERVED FOR SECURE COM |
| J12-11 | – | RESERVED FOR SECURE COM |
| J12-12 | | |
| J12-13 | J10-11,12 J13-13 P2-29 | MIC INPUT |
| J12-14 | – | RESERVED FOR SECURE COM |
| J12-15 | E1 J10-13,14 J13-15 J14-31 | EXT MOD INPUT |
| J12-16 | | |
| J12-17 | – | RESERVED FOR SECURE COM |
| J12-18 | | |
| J12-19 | J7-79 J8-67 J13-19 | DEMOD CAL AUDIO |
| J12-20 | J3-9, J4-24, J13-20, J15-94 | $\overline{\text{PWR ON}}$ |
| J12-21 | | |
| J12-22 | J8-62 J10-47,48 J13-22 P2-4 | VOL CNTL AUDIO |
| J12-23 | J13-23, J14-23 | $\overline{\text{ROM-P7}}$ |
| J12-24 | J13-24, J14-24 | $\overline{\text{ROM-P6}}$ |

Table 5.1. System Motherboard Wirelist (Sheet 32 of 57)

| FROM | TO | NAME |
|---|---|---|
| J12-25 | – | RESERVED FOR SECURE COM |
| J12-26 | J13-26 J14-26 | ROM-P10 |
| J12-27 | – | RESERVED FOR SECURE COM |
| J12-28 | J10-45,46 J13-28 P2-55 | 1 KHZ SINE (I) |
| J12-29 | J13-29 P2-53,54 | 1 KHZ SINE RTN (I) |
| J12-30 | J13-30 | 1 KHZ SINE RTN (O) |
| J12-31 | J10-67,68 J13-31 | 1 KHZ SINE RTN |
| J12-32 | J13-32, J14-32 | ROM-P5 |
| J12-33 | J13-33, J14-33 | ROM-P8 |
| J12-34 | J10-23,24 J13-34 P2-58 | EXT MOD (I) |
| J12-35 | J13-35 P2-56 | EXT MOD RTN (I) |
| J12-36 | J13-36 | EXT MOD RTN (O) |
| J12-37 | J10-65,66 J13-37 | EXT MOD RTN |
| J12-38 | | |
| J12-39 | | |
| J12-40 | J10-25,26 J13-40 P2-47,48 | INT MOD (I) |
| J12-41 | J13-41 P2-49,50 | INT MOD RTN (I) |
| J12-42 | J13-42 | INT MOD RTN (O) |
| J12-43 | J10-63,64 J13-43 | INT MOD RTN |
| J12-44 | J7-60 J13-44 J15-24 | INT SCOPE TO RNG SW |
| J12-45 | +5V | +5V |
| J12-46 | +5V | +5V |
| J12-47 | −5V | −5V |
| J12-48 | −5V | −5V |
| J12-49 | +33V | +33V |

Table 5.1. System Motherboard Wirelist (Sheet 33 of 57)

| FROM | TO | NAME |
|---|---|---|
| J12-50 | +33V | +33V |
| J12-51 | +12V | +12V |
| J12-52 | +12V | +12V |
| J12-53 | −12V | −12V |
| J12-54 | −12V | −12V |
| J12-55 | J11-60 J13-55 | INT FREQ CNTR |
| J12-56 | +5V | $V_{pp}$ |
| J12-57 | +5V | $\overline{PGM}$ |
| J12-58 | J11,J13, J14-58 | $\overline{NMI}$ |
| J12-59 | J13 J14-59 | $\overline{ROM\text{-}P3}$ |
| J12-60 | −60 | $\overline{ROM\text{-}P1}$ |
| J12-61 | −61 | $\overline{ROM\text{-}P0}$ |
| J12-62 | −62 | $\overline{ROM\text{-}P14}$ |
| J12-63 | −63 | $\overline{ROM\text{-}P13}$ |
| J12-64 | −64 J15-39 | $\overline{FIRQ}$ |
| J12-65 | −65 | $\overline{ROM\text{-}P12}$ |
| J12-66 | J13-66 J14-66 | $\overline{XRAM}$ |
| J12-67 | J13 J14-67 | $\overline{ROM\text{-}P11}$ |
| J12-68 | −68 | $\overline{ROM\text{-}P9}$ |
| J12-69 | J11 J13 J14-69 | $\overline{RESET}$ |
| J12-70 | −70 | $\overline{IRQ}$ |
| J12-71 | −71 | A1 |
| J12-72 | −72 | A0 |
| J12-73 | −73 | A3 |
| J12-74 | J11 J13 J14-74 | A2 |

Table 5.1. System Motherboard Wirelist (Sheet 34 of 57)

| FROM | TO | NAME |
|---|---|---|
| J12-75 | J11 J13 J14-75 | A5 |
| J12-76 | —76 | A4 |
| J12-77 | —77 | A7 |
| J12-78 | —78 | A6 |
| J12-79 | —79 | A9 |
| J12-80 | —80 | A8 |
| J12-81 | —81 | A11 |
| J12-82 | —82 | A10 |
| J12-83 | —83 | A13 |
| J12-84 | —84 | A12 |
| J12-85 | —85 | A15 |
| J12-86 | —86 | A14 |
| J12-87 | —87 | $\overline{\text{I/O EN}}$ |
| J12-88 | —88 | E |
| J12-89 | —89 | Q |
| J12-90 | —90 | R/$\overline{\text{W}}$ |
| J12-91 | —91 | D1 |
| J12-92 | —92 | D0 |
| J12-93 | —93 | D3 |
| J12-94 | —94 | D2 |
| J12-95 | —95 | D5 |
| J12-96 | —96 | D4 |
| J12-97 | —97 | D7 |
| J12-98 | J11 J13 J14-98 | D6 |

Table 5.1. System Motherboard Wirelist (Sheet 35 of 57)

| FROM | TO | NAME |
|---|---|---|
| J12-99 | GND | GND |
| J12-100 | GND | GND |
| **OPTION B MODULE** | | |
| J13-1 | GND | GND |
| J13-2 | GND | GND |
| J13-3 | J12-3 P1-9 | AM MOD + DC REF (I) |
| J13-4 | J12-4 J17-14 | AM MOD + DC REF (O) |
| J13-5 | J14-12 | OPT B ENABLE |
| J13-6 | J10-61,62 J12-6 P1-8 | 5 VDC + AM MOD |
| J13-7 | – | RESERVED FOR SECURE COM |
| J13-8 | | |
| J13-9 | – | RESERVED FOR SECURE COM |
| J13-10 | – | RESERVED FOR SECURE COM |
| J13-11 | – | RESERVERED FOR SECURE COM |
| J13-12 | | |
| J13-13 | J10-11,12 J12-13 P2-29 | MIC INPUT |
| J13-14 | – | RESERVED FOR SECURE COM |
| J13-15 | E1 J10-13,14 J12-15, J14-31 | EXT MOD INPUT |
| J13-16 | | |
| J13-17 | – | RESERVED FOR SECURE COM |
| J13-18 | | |
| J13-19 | J7-79 J8-67 J12-19 | DEMOD CAL AUDIO |
| J13-20 | J3-9, J4-24, J12-20, J15-94 | $\overline{\text{PWR ON}}$ |
| J13-21 | | |

Table 5.1. System Motherboard Wirelist (Sheet 36 of 57)

| FROM | TO | NAME |
|---|---|---|
| J13-22 | J8-62 J10-47,48 J12-22 P2-4 | VOL CNTL AUDIO |
| J13-23 | J12-23, J14-23 | $\overline{\text{ROM-P7}}$ |
| J13-24 | J12-24, J14-24 | $\overline{\text{ROM-P6}}$ |
| J13-25 | – | RESERVED FOR SECURE COM |
| J13-26 | J12-26 J14-26 | $\overline{\text{ROM-P10}}$ |
| J13-27 | – | RESERVED FOR SECURE COM |
| J13-28 | J10-45,46 J12-28 P2-55 | 1 KHZ SINE (I) |
| J13-29 | J12-29 P2-53,54 | 1 KHZ SINE RTN (I) |
| J13-30 | J12-30 | 1 KHZ SINE RTN (O) |
| J13-31 | J10-67,68 J12-31 | 1 KHZ SINE RTN |
| J13-32 | J12-32, J14-32 | $\overline{\text{ROM-P5}}$ |
| J13-33 | J12-33, J14-33 | $\overline{\text{ROM-P8}}$ |
| J13-34 | J10-23,24 J12-34 P2-58 | EXT MOD (I) |
| J13-35 | J12-35 P2-56 | EXT MOD RTN (I) |
| J13-36 | J12-36 | EXT MOD RTN (O) |
| J13-37 | J10-65,66 J12-37 | EXT MOD RTN |
| J13-38 | | |
| J13-39 | | |
| J13-40 | J10-25,26 J12-40 P2-47,48 | INT MOD (I) |
| J13-41 | J12-41 P2-49,50 | INT MOD RTN (I) |
| J13-42 | J12-42 | INT MOD RTN (O) |
| J13-43 | J10-63,64 J12-43 | INT MOD RTN |
| J13-44 | J7-60 J12-44 J15-24 | INT SCOPE TO RNG SW |
| J13-45 | +5V | +5V |
| J13-46 | +5V | +5V |

Table 5.1. System Motherboard Wirelist (Sheet 37 of 57)

| FROM | TO | NAME |
|---|---|---|
| J13-47 | −5V | −5V |
| J13-48 | −5V | −5V |
| J13-49 | +33V | +33V |
| J13-50 | +33V | +33V |
| J13-51 | +12V | +12V |
| J13-52 | +12V | +12V |
| J13-53 | −12V | −12V |
| J13-54 | −12V | −12V |
| J13-55 | J11-60 J12-55 | INT FREQ CNTR |
| J13-56 | +5V | $V_{pp}$ |
| J13-57 | +5V | $\overline{PGM}$ |
| J13-58 | J11 J12 J14-58 | $\overline{NMI}$ |
| J13-59 | J12 J14-59 | $\overline{ROM\text{-}P3}$ |
| J13-60 | −60 | $\overline{ROM\text{-}P1}$ |
| J13-61 | −61 | $\overline{ROM\text{-}P0}$ |
| J13-62 | −62 | $\overline{ROM\text{-}P14}$ |
| J13-63 | −63 | $\overline{ROM\text{-}P13}$ |
| J13-64 | −64 J15-39 | $\overline{FIRQ}$ |
| J13-65 | −65 | $\overline{ROM\text{-}P12}$ |
| J13-66 | J12-66 J14-66 | $\overline{XRAM}$ |
| J13-67 | −67 | $\overline{ROM\text{-}P11}$ |
| J13-68 | −68 | $\overline{ROM\text{-}P9}$ |
| J13-69 | J11 J12 J14-69 | $\overline{RESET}$ |
| J13-70 | J11 J12 J14-70 | $\overline{IRQ}$ |

Table 5.1. System Motherboard Wirelist (Sheet 38 of 57)

| FROM | TO | NAME |
|---|---|---|
| J13-71 | J11 J12 J14-71 | A1 |
| J13-72 | −72 | A0 |
| J13-73 | −73 | A3 |
| J13-74 | −74 | A2 |
| J13-75 | −75 | A5 |
| J13-76 | −76 | A4 |
| J13-77 | −77 | A7 |
| J13-78 | −78 | A6 |
| J13-79 | −79 | A9 |
| J13-80 | −80 | A8 |
| J13-81 | −81 | A11 |
| J13-82 | −82 | A10 |
| J13-83 | −83 | A13 |
| J13-84 | −84 | A12 |
| J13-85 | −85 | A15 |
| J13-86 | −86 | A14 |
| J13-87 | −87 | $\overline{\text{I/O EN}}$ |
| J13-88 | −88 | E |
| J13-89 | −89 | Q |
| J13-90 | −90 | R/$\overline{\text{W}}$ |
| J13-91 | −91 | D1 |
| J13-92 | −92 | D0 |
| J13-93 | −93 | D3 |
| J13-94 | −94 | D2 |
| J13-95 | J11 J12 J14-95 | D5 |

Table 5.1. System Motherboard Wirelist (Sheet 39 of 57)

| FROM | TO | NAME |
|---|---|---|
| J13-96 | J11 J12 J14-96 | D4 |
| J13-97 | −97 | D7 |
| J13-98 | −98 | D6 |
| J13-99 | GND | GND |
| J13-100 | GND | GND |
| **PROCESSOR MODULE** | | |
| J14-1 | GND | GND |
| J14-2 | GND | GND |
| J14-3 | J15-84 | COLUMN 0 |
| J14-4 | J15-83 | COLUMN 1 |
| J14-5 | J15-89 | COLUMN 2 |
| J14-6 | J15-88 | COLUMN 3 |
| J14-7 | J15-92 | ROW 0 |
| J14-8 | J15-85 | ROW 1 |
| J14-9 | J15-86 | ROW 2 |
| J14-10 | J15-87 | ROW 3 |
| J14-11 | | CB2 |
| J14-12 | J13-5 | OPT B DET |
| J14-13 | J15-90 | KEY ROW 4 |
| J14-14 | J12-5 | OPT A DET |
| J14-15 | J15-40 | OPTO CCW |
| J14-16 | J7-4, J15-20 | VERT FROM RNG SW |
| J14-17 | | $\overline{\text{ROM-P15}}$ |
| J14-18 | J7-68 J10-27,28 | $\overline{\text{AF BUS EN I}}$ |

Table 5.1. System Motherboard Wirelist (Sheet 40 of 57)

| FROM | TO | NAME |
|---|---|---|
| J14-19 | J7-10 | VERT CHAR SYNC |
| J14-20 | J7-83 | HORIZ CHAR SYNC |
| J14-21 | J7-87 | CHAR GEN Z-AXIS |
| J14-22 | J7-22 | $\overline{\text{CHAR GEN RST}}$ |
| J14-23 | J12-23, J13-23 | $\overline{\text{ROM-P7}}$ |
| J14-24 | J12-24, J13-24 | $\overline{\text{ROM-P6}}$ |
| J14-25 | | |
| J14-26 | J12-26 J13-26 | $\overline{\text{ROM-P10}}$ |
| J14-27 | | CB1 |
| J14-28 | | CA2 |
| J14-29 | J10-29 | BINARY MOD |
| J14-30 | | |
| J14-31 | E1, J10-13,14 J12-15, J13-15 | EXT MOD INPUT |
| J14-32 | J12-32, J13-32 | $\overline{\text{ROM-P5}}$ |
| J14-33 | J12-33, J13-33 | $\overline{\text{ROM-P8}}$ |
| J14-34 | | |
| J14-35 | | |
| J14-36 | | |
| J14-37 | | |
| J14-38 | | |
| J14-39 | | |
| J14-40 | | |
| J14-41 | | |
| J14-42 | | |
| J14-43 | | |

Table 5.1. System Motherboard Wirelist (Sheet 41 of 57)

| FROM | TO | NAME |
|---|---|---|
| J14-44 | J7-44 | $\overline{\text{LINE 1}}$ |
| J14-45 | +5V | +5V |
| J14-46 | +5V | +5V |
| J14-47 | −5V | −5V |
| J14-48 | −5V | −5V |
| J14-49 | | |
| J14-50 | | |
| J14-51 | | |
| J14-52 | | |
| J14-53 | | |
| J14-54 | | |
| J14-55 | +5V | $\overline{\text{CL CTL}}$ |
| J14-56 | +5V | $V_{pp}$ |
| J14-57 | +5V | $\overline{\text{PGM}}$ |
| J14-58 | J11, J12, J13-58 | $\overline{\text{NMI}}$ |
| J14-59 | J12 J13-59 | $\overline{\text{ROM-P3}}$ |
| J14-60 | −60 | $\overline{\text{ROM-P1}}$ |
| J14-61 | −61 | $\overline{\text{ROM-P0}}$ |
| J14-62 | −62 | $\overline{\text{ROM-P14}}$ |
| J14-63 | −63 | $\overline{\text{ROM-P13}}$ |
| J14-64 | J15-39 J12-64 J13-64 | $\overline{\text{FIRQ}}$ |
| J14-65 | J12 J13-65 | $\overline{\text{ROM-P12}}$ |
| J14-66 | J12-66 J13-66 | $\overline{\text{XRAM}}$ |
| J14-67 | J12 J13-67 | $\overline{\text{ROM-P11}}$ |
| J14-68 | J12 J13-68 | $\overline{\text{ROM-P9}}$ |

Table 5.1. System Motherboard Wirelist (Sheet 42 of 57)

| FROM | TO | NAME |
|---|---|---|
| J14-69 | J11 J12 J13-69 | $\overline{\text{RESET}}$ |
| J14-70 | −70 | $\overline{\text{IRQ}}$ |
| J14-71 | −71 | A1 |
| J14-72 | −72 | A0 |
| J14-73 | −73 | A3 |
| J14-74 | −74 | A2 |
| J14-75 | −75 | A5 |
| J14-76 | −76 | A4 |
| J14-77 | −77 | A7 |
| J14-78 | −78 | A6 |
| J14-79 | −79 | A9 |
| J14-80 | −80 | A8 |
| J14-81 | −81 | A11 |
| J14-82 | −82 | A10 |
| J14-83 | −83 | A13 |
| J14-84 | −84 | A12 |
| J14-85 | −85 | A15 |
| J14-86 | −86 | A14 |
| J14-87 | −87 | $\overline{\text{I/O EN}}$ |
| J14-88 | −88 | E |
| J14-89 | −89 | Q |
| J14-90 | −90 | R/W |
| J14-91 | −91 | D1 |
| J14-92 | −92 | D0 |
| J14-93 | J11-93, J12-93, J13-93 | D3 |

Table 5.1. System Motherboard Wirelist (Sheet 43 of 57)

| FROM | TO | NAME |
|---|---|---|
| J14-94 | J11 J12 J13-94 | D2 |
| J14-95 | −95 | D5 |
| J14-96 | −96 | D4 |
| J14-97 | −97 | D7 |
| J14-98 | −98 | D6 |
| J14-99 | GND | GND |
| J14-100 | GND | GND |
| **FRONT PANEL INTERFACE MODULE** | | |
| J15-1 | E8 | EXT INPUT |
| J15-2 | GND | GND |
| J15-3 | | |
| J15-4 | P1-39,40 | VERT POS |
| J15-5 | P1-41,42 | VERT GAIN |
| J15-6 | P1-43,44 | VERT GAIN RTN |
| J15-7 | J18-7 | RF ATTEN 130 DB |
| J15-8 | J18-8 | RF ATTEN 120 DB |
| J15-9 | J18-6 | RF ATTEN 110 DB |
| J15-10 | J18-9 | RF ATTEN 100 DB |
| J15-11 | J18-5 | RF ATTEN 90 DB |
| J15-12 | J18-10 | RF ATTEN 80 DB |
| J15-13 | J18-4 | RF ATTEN 70 DB |
| J15-14 | J18-11 | RF ATTEN 60 DB |
| J15-15 | J18-3 | RF ATTEN 50 DB |
| J15-16 | J18-12 | RF ATTEN 40 DB |

Table 5.1. System Motherboard Wirelist (Sheet 44 of 57)

| FROM | TO | NAME |
|---|---|---|
| J15-17 | J18-2 | RF ATTEN 30 DB |
| J15-18 | J18-13 | RF ATTEN 20 DB |
| J15-19 | J18-1 | RF ATTEN 10 DB |
| J15-20 | J7-4 J14-16 | VERT FROM RNG SW |
| J15-21 | J18-14 | RF ATTEN 0 DB |
| J15-22 | J7-6 | DVM FROM RNG SW |
| J15-23 | | |
| J15-24 | J7-60 J12, J13-44 | INT SCOPE TO RNG |
| J15-25 | P1-49,50 | 10V/DIV RNG SEL |
| J15-26 | P1-51,52 | 1V/DIV RNG SEL |
| J15-27 | P1-53,54 | 0.1V/DIV RNG SEL |
| J15-28 | P1-57,58 | 0.01V/DIV RNG SEL |
| J15-29 | J17-4 | OFFSET ON/OFF |
| J15-30 | J8-58 | $\overline{\text{IF OVERLOAD}}$ |
| J15-31 | P2-5 | WB/NB |
| J15-32 | J8-59 | SIGNAL PRESENT |
| J15-33 | P1-5 | $\overline{\text{ANT SEL}}$ |
| J15-34 | J11-61 | EXT FREQ CNTR |
| J15-35 | | SPARE BIT |
| J15-36 | J11-63 | $\overline{\text{EXT FREQ CNTR}}$ |
| J15-37 | J17-20 | RF OVER TEMP |
| J15-38 | J8-57 | WB SIGN PRES |
| J15-39 | J14-64 J13-64, J12-64 | $\overline{\text{FIRQ}}$ |
| J15-40 | J14-15 | OPTO CCW |
| J15-41 | | |

Table 5.1. System Motherboard Wirelist (Sheet 45 of 57)

| FROM | TO | NAME |
|---|---|---|
| J15-42 | P1-47 | OPTICAL ENC B |
| J15-43 | | |
| J15-44 | P1-45 | OPTICAL ENC A |
| J15-45 | +5V | +5V |
| J15-46 | +5V | +5V |
| J15-47 | | |
| J15-48 | | |
| J15-49 | P1-59,60 | HORIZ INPUT |
| J15-50 | J2-17 | HORIZ TO SCOPE AMP |
| J15-51 | +12V | +12V |
| J15-52 | +12V | +12V |
| J15-53 | −12V | −12V |
| J15-54 | −12V | −12V |
| J15-55 | P2-7 | EXT HORIZ SEL |
| J15-56 | P2-8 | 100 MS/DIV SWP SEL |
| J15-57 | P2-9 | 10 MS/DIV SWP SEL |
| J15-58 | P2-10 | 1 MS/DIV SWP SEL |
| J15-59 | P2-11 | 100 μS/DIV SWP SEL |
| J15-60 | P2-12 | 10 μS/DIV SWP SEL |
| J15-61 | P2-13 | 1 μS/DIV SWP SEL |
| J15-62 | J7-13 J10-3,4 J11-13 | AF ADD BUS 0 |
| J15-63 | J7-15 J10-5,6 J11-15 | AF ADD BUS 1 |
| J15-64 | J7-17 J10-7,8 J11-17 | AF ADD BUS 2 |
| J15-65 | J7-19 J10-9,10 J11-19 | AF ADD BUS 3 |
| J15-66 | J7-29 J10-15,16 J11-29,30 | AF DATA BUS 3 |

Table 5.1. System Motherboard Wirelist (Sheet 46 of 57)

| FROM | TO | NAME |
|---|---|---|
| J15-67 | J7-31 J10-17,18 J11-31,32 | AF DATA BUS 2 |
| J15-68 | J7-33 J10-19,20 J11-33,34 | AF DATA BUS 1 |
| J15-69 | J11-68 | $\overline{\text{AF BUS EN 2}}$ |
| J15-70 | J7-35 J10-21,22 J11-35,36 | AF DATA BUS 0 |
| J15-71 | | +8V OUT |
| J15-72 | | −8V OUT |
| J15-73 | P2-23 | IMAGE HI/LO |
| J15-74 | | ATTN X 0.01 |
| J15-75 | | ATTN X 0.001 |
| J15-76 | J17-5 | OFFSET ATTEN EN |
| J15-77 | | DC SELECT |
| J15-78 | J17-22 | MON + DSB/GEN |
| J15-79 | | ATTN X 0.1 |
| J15-80 | | EXT INPUT SEL |
| J15-81 | P2-21 | MON/GEN |
| J15-82 | | ATTN X 1.0 |
| J15-83 | J14-4 | COLUMN 1 |
| J15-84 | J14-3 | COLUMN 0 |
| J15-85 | J14-8 | ROW 1 |
| J15-86 | J14-9 | ROW 2 |
| J15-87 | J14-10 | ROW 3 |
| J15-88 | J14-6 | COLUMN 3 |
| J15-89 | J14-5 | COLUMN 2 |
| J15-90 | J14-13 | KEY ROW 4 |
| J15-91 | J4-23 | $\overline{\text{PWR OFF}}$ |

Table 5.1. System Motherboard Wirelist (Sheet 47 of 57)

| FROM | TO | NAME |
|---|---|---|
| J15-92 | J14-7 | ROW 0 |
| J15-93 | J16-6 | OVEN LED CATH |
| J15-94 | J4-24 J3-9 J12-20 J13-20 | $\overline{\text{PWR ON}}$ |
| J15-95 | GND | DC LED CATH |
| J15-96 | J16-5 | OVEN LED ANODE |
| J15-97 | J4-25 | AC LED |
| J15-98 | J4-37 | DC LED |
| J15-99 | GND | GND |
| J15-100 | GND | GND |
| **FREQUENCY STANDARD MODULE** | | |
| J16-1 | J3-15,16 J4-34,36 | FREQ STD SUPPLY |
| J16-2 | GND | GND |
| J16-3 | | |
| J16-4 | | |
| J16-5 | J15-96 | OVEN LED ANODE |
| J16-6 | J15-93 | OVEN LED CATHODE |
| J16-7 | NC | |
| J16-8 | +12V | +12V |
| **RF INPUT/OUTPUT MODULE** | | |
| J17-1 | +5V | +5V |
| J17-2 | −5V | −5V |
| J17-3 | +33V | +33V |
| J17-4 | J15-29 | OFFSET ON/OFF |
| J17-5 | J15-76 | OFFSET ATTEN EN |

Table 5.1. System Motherboard Wirelist (Sheet 48 of 57)

| FROM | TO | NAME |
|---|---|---|
| J17-6 | J8-47 J9-3,4 J11-49 | DATA CL |
| J17-7 | J8-49 J9-5,6 J11-43,44 | DATA LATCH |
| J17-8 | J11-56 | OFFSET DATA |
| J17-9 | J7-38 | ANT EN |
| J17-10 | J7-8 | RF INPUT PWR |
| J17-11 | GND | GND |
| J17-12 | GND | GND |
| J17-13 | J9-33,34 | .01-1 AGC |
| J17-14 | J12-4 J13-4 | AM MOD + DC REF (0) |
| J17-15 | J7-55 | EXT FWD PWR |
| J17-16 | J9-15,16 | WB AMP LO/HI |
| J17-17 | J7-57 | EXT RFL PWR |
| J17-18 | J10-59,60 | OFFSET MOD |
| J17-19 | J10-51,52 | DSBSC MOD |
| J17-20 | J15-37 | RF OVER TEMP |
| J17-21 | J7-59 | CARRIER + MOD LVL |
| J17-22 | J15-78 | MON + DSB/GEN |
| J17-23 | +12V | +12V |
| J17-24 | −12V | −12V |
| J17-25 | | |
| J17-26 | | |
| J17-27 | | |
| J17-28 | | |
| J17-29 | | |

Table 5.1. System Motherboard Wirelist (Sheet 49 of 57)

| FROM | TO | NAME |
|---|---|---|
| J17-30 | | |
| J17-31 | | |
| J17-32 | | |
| J17-33 | | |
| J17-34 | | |
| J17-35 | | |
| J17-36 | | |
| J17-37 | | |
| J17-38 | | |
| J17-39 | GND | |
| J17-40 | | |
| J17-41 | | |
| J17-42 | | |
| J17-43 | | |
| J17-44 | | |
| J17-45 | | |
| J17-46 | | |
| J17-47 | | |
| 48 | | |
| J17-49 | | |
| J17-50 | | |
| J18-1 | J15-19 | RF ATTEN 10 DB |
| J18-2 | J15-17 | RF ATTEN 30 DB |
| J18-3 | J15-15 | RF ATTEN 50 DB |
| J18-4 | J15-13 | RF ATTEN 70 DB |
| J18-5 | J13-11 | RF ATTEN 90 DB |

Table 5.1. System Motherboard Wirelist (Sheet 50 of 57)

| FROM | TO | NAME |
|---|---|---|
| J18-6 | J15-9 | RF ATTEN 110 DB |
| J18-7 | J15-7 | RF ATTEN 130 DB |
| J18-8 | J15-8 | RF ATTEN 120 DB |
| J18-9 | J15-10 | RF ATTEN 100 DB |
| J18-10 | J15-12 | RF ATTEN 80 DB |
| J18-11 | J15-14 | RF ATTEN 60 DB |
| J18-12 | J15-16 | RF ATTEN 40 DB |
| J18-13 | J15-18 | RF ATTEN 20 DB |
| J18-14 | J15-21 | RF ATTEN 0 DB |
| J18-15 | | |
| J18-16 | | |
| **FAN** | | |
| J19-1 | +12V | FAN HI |
| J19-2 | GND | FAN LO |
| **ROTATION COIL** | | |
| J20-1 | GND | GND |
| J20-2 | J2-50 | TRACE ROTATION |
| **FRONT PANEL** | | |
| P1-1 | +33V | +33V |
| P1-2 | | |
| P1-3 | GND | GND |
| P1-4 | | |
| P1-5 | J15-33 | $\overline{\text{ANT SEL}}$ |
| P1-6 | | |
| P1-7 | GND | GND |

Table 5.1. System Motherboard Wirelist (Sheet 51 of 57)

| FROM | TO | NAME |
|---|---|---|
| P1-8 | J10-61,62 J12-6 J13-6 | 5 VDC + AM MOD |
| P1-9 | J12-3 J13-3 | AM MOD + DC REF (I) |
| P1-10 | J2-59 | FOCUS LVL |
| P1-11 | J2-43 | INTENSITY LVL |
| P1-12 | −5V | −5V |
| P1-13 | +5V | +5V |
| P1-14 | | |
| P1-15 | J2-31,32 J7-56 | +8V |
| P1-16 | J2-53 | SWP VERNIER VOLT |
| P1-17 | J7-61 | DISPERSION SWP RTN |
| P1-18 | J7-61 | DISPERSION SWP RTN |
| P1-19 | J9-25,26 | SYNTH SWP |
| P1-20 | J9-25,26 | SYNTH SWP |
| P1-21 | J7-63 | DISPERSION SWP |
| P1-22 | J7-63 | DISPERSION SWP |
| P1-23 | −5V | −5V |
| P1-24 | −5V | −5V |
| P1-25 | J2-45 | HORIZ POS |
| P1-26 | J2-45 | HORIZ POS |
| P1-27 | | |
| P1-28 | | |
| P1-29 | +5V | +5V |
| P1-30 | +5V | +5V |
| P1-31 | GND | GND |
| P1-32 | GND | GND |

Table 5.1. System Motherboard Wirelist (Sheet 52 of 57)

| FROM | TO | NAME |
|---|---|---|
| P1-33 | | |
| P1-34 | J2-24 | AUTO/NOR TRIG |
| P1-35 | −5V | −5V |
| P1-36 | −5V | −5V |
| P1-37 | J7-5 | TRIG LVL |
| P1-38 | J7-5 | TRIG LVL |
| P1-39 | J15-4 | VERT POS |
| P1-40 | J15-4 | VERT POS |
| P1-41 | J15-5 | VERT GAIN |
| P1-42 | J15-5 | VERT GAIN |
| P1-43 | J15-6 | VERT GAIN RTN |
| P1-44 | J15-6 | VERT GAIN RTN |
| P1-45 | J15-44 | OPTICAL ENC A |
| P1-46 | | |
| P1-47 | J15-42 | OPTICAL ENC B |
| P1-48 | | |
| P1-49 | J15-25 | 10V/DIV RNG SEL |
| P1-50 | J15-25 | 10V/DIV RNG SEL |
| P1-51 | J15-26 | 1V/DIV RNG SEL |
| P1-52 | J15-26 | 1V/DIV RNG SEL |
| P1-53 | J15-27 | 0.1V/DIV RNG SEL |

Table 5.1. System Motherboard Wirelist (Sheet 53 of 57)

| FROM | TO | NAME |
|---|---|---|
| P1-54 | J15-27 | 0.IV/DIV RNG SEL |
| P1-55 | GND | GND |
| P1-56 | GND | GND |
| P1-57 | J15-28 | 0.01V/DIV RNG SEL |
| P1-58 | J15-28 | 0.01V/DIV RNG SEL |
| P1-59 | J15-48 | HORIZ INPUT |
| P1-60 | J15-49 | HORIZ INPUT |

Table 5.1. System Motherboard Wirelist (Sheet 54 of 57)

| FROM | TO | NAME |
|---|---|---|
| **FRONT PANEL** | | |
| P2-1 | +12V | +12V |
| P2-2 | J8-29 | SQUELCH LVL |
| P2-3 | J7-65 | VOL CNTL AUDIO RTN |
| P2-4 | J8-62 J10-47,48 J12-22 J13-22 | VOL CNTL AUDIO |
| P2-5 | J15-31 | WB/NB |
| P2-6 | | |
| P2-7 | J15-55 | EXT HORIZ SEL |
| P2-8 | J15-56 | 100 MS/DIV SWP SEL |
| P2-9 | J15-57 | 10 MS/DIV SWP SEL |
| P2-10 | J15-58 | 1 MS/DIV SWP SEL |
| P2-11 | J15-59 | 100 μS/DIV SWP SEL |
| P2-12 | J15-60 | 10 μS/DIV SWP SEL |
| P2-13 | J15-61 | 1 μS/DIV SWP SEL |
| P2-14 | | |
| P2-15 | +5V | +5V |
| P2-16 | GND | GND |
| P2-17 | J8-60 | SIG PRES LED |
| P2-18 | J8-27 | BFO FREQ CNTL |
| P2-19 | GND | GND |
| P2-20 | GND | GND |
| P2-21 | J15-81 | MON/GEN |
| P2-22 | | |
| P2-23 | J15-73 | IMAGE HI/LO |
| P2-24 | | |

Table 5.1. System Motherboard Wirelist (Sheet 55 of 57)

| FROM | TO | NAME |
|---|---|---|
| P2-25 | | |
| P2-26 | | |
| P2-27 | J7-80 | HDST AUDIO |
| P2-28 | | |
| P2-29 | J10-11,12 J12-13 J13-13 | MIC IN |
| P2-30 | | |
| P2-31 | | |
| P2-32 | | |
| P2-33 | | |
| P2-34 | | |
| P2-35 | | |
| P2-36 | | |
| P2-37 | | |
| P2-38 | | |
| P2-39 | | |
| P2-40 | | |
| P2-41 | | |
| P2-42 | | |
| P2-43 | | |
| P2-44 | | |
| P2-45 | | |
| P2-46 | | |
| P2-47 | J10-25,26 J12-40 J13-40 | INT MOD (I) |

Table 5.1. System Motherboard Wirelist (Sheet 56 of 57)

| FROM | TO | NAME |
|---|---|---|
| P2-48 | J10-25,26 J12-40 J13-40 | INT MOD (I) |
| P2-49 | J12-41 J13-41 | INT MOD RTN (I) |
| P2-50 | J12-41 J13-41 | INT MOD RTN (I) |
| P2-51 | GND | GND |
| P2-52 | GND | GND |
| P2-53 | J12-29 J13-29 | 1 KHZ SINE RTN (I) |
| P2-54 | J12-29 J13-29 | 1 KHZ SINE RTN (I) |
| P2-55 | J10-45,46 J12-28 J13-28 | 1 KHZ SINE (I) |
| P2-56 | J12-35 J13-35 | EXT MOD RTN (I) |
| P2-57 | +5V | +5V |
| P2-58 | J10-23,24 J12-34 J13-34 | EXT MOD (I) |
| P2-59 | GND | GND |
| P2-60 | GND | GND |

Table 5.1. System Motherboard Wirelist (Sheet 57 of 57)

| FROM | TO | NAME |
|---|---|---|
| **CAPACITORS** | | |
| C1-1 | R1-1 E2 | FP MOD OUT |
| C1-2 | GND | |
| C2-1 | R2-1 E3 | DEMOD OUT |
| C2-2 | GND | |
| **110/220V SWITCH** | | |
| S1-1 | J3-37,38 | 220 LOW |
| S1-2 | E10 J3-29,30 NE2-2 V2-2 | AC NEUT |
| S1-3 | J3-41,42 J6-53,54 | 110 LOW |
| S1-4 | S1-7 | |
| S1-5 | J3-35,36 NE1-2 V1-2 | PRIMARY #1 |
| S1-6 | E10 J3-29,30 NE2-2 V2-2 | AC NEUT |
| S1-7 | S1-4 | |
| S1-8 | J3-31,32 NE2-1 V2-1 | PRIMARY #2 |
| S1-9 | E9 J3-33,34 NE1-1 V1-1 | AC HOT |
| **VARISTORS** | | |
| V1-1 | E9 J3-33,34 NE1-1 S1-9 | AC HOT |
| V1-2 | J3-35,36 NE1-2 S1-5 | PRIMARY #1 |
| V2-1 | J3-31,32 NE2-1 S1-8 | PRIMARY #2 |
| V2-2 | E10 J3-29,30 NE2-2 S1-2,6 | AC NEUT |
| **NEON BULBS** | | |
| NE1-1 | E9 J3-33,34 S1-9 V1-1 | AC HOT |
| NE1-2 | J3-35,36 S1-5 V1-2 | PRIMARY #1 |
| NE2-1 | J3-31,32 S1-8 V2-1 | PRIMARY #2 |
| NE2-2 | E10 J3-29,30 S1-2,6 V2-2 | AC NEUT |
| **RESISTORS** | | |
| R1-1 | E2 C1-1 | FP MOD OUT |
| R1-2 | J10-43,44 | |
| R2-1 | E3 C2-1 | DEMOD OUT |
| R2-2 | J8-64 | DEMOD OUT |

Table 5-2a. System Wirelist– High-Voltage Power Supply (A1)

| 1 | 2 | 3 | 4 | 5 | 6 | 7 | 8 | 9 |
|---|---|---|---|---|---|---|---|---|
| WIRE NO. | COLOR SIZE AWG | WIRE RUNS FROM | NOTE OR VIEW | TO | NOTE OR VIEW | FUNCTION ROUTING REMARKS | APPROX LENGTH (INCHES) | USE FIND NO. |
| | A1 EDGE CARD | A1 P1 - 1 | | A19 J1 - 1 | | GND | | |
| | A1 EDGE CARD | A1 P1 - 2 | | A19 J1 - 2 | | GND | | |
| | A1 EDGE CARD | A1 P1 - 3 | | A19 J1 - 3 | | HV REFERENCE | | |
| | A1 EDGE CARD | A1 P1 - 4 | | A19 J1 - 4 | | HV REFERENCE | | |
| | A1 EDGE CARD | A1 P1 - 5 | | A19 J1 - 5 | | $\overline{\text{HV CHOPPER DR}}$ | | |
| | A1 EDGE CARD | A1 P1 - 6 | | A19 J1 - 6 | | $\overline{\text{HV CHOPPER DR}}$ | | |
| | A1 EDGE CARD | A1 P1 - 7 | | A19 J1 - 7 | | HV CHOPPER DR | | |
| | A1 EDGE CARD | A1 P1 - 8 | | A19 J1 - 8 | | HV CHOPPER DR | | |
| | A1 EDGE CARD | A1 P1 - 9 | | A19 J1 - 9 | | NC | | |
| | A1 EDGE CARD | A1 P1 - 10 | | A19 J1 - 10 | | NC | | |
| | A1 EDGE CARD | A1 P1 - 11 | | A19 J1 - 11 | | +12V | | |
| | A1 EDGE CARD | A1 P1 - 12 | | A19 J1 - 12 | | +12V | | |
| | A1 EDGE CARD | A1 P1 - 13 | | A19 J1 - 13 | | NC | | |
| | A1 EDGE CARD | A1 P1 - 14 | | A19 J1 - 14 | | NC | | |
| | A1 EDGE CARD | A1 P1 - 15 | | A19 J1 - 15 | | NC | | |
| | A1 EDGE CARD | A1 P1 - 16 | | A19 J1 - 16 | | NC | | |
| | A1 EDGE CARD | A1 P1 - 17 | | A19 J1 - 17 | | GND | | |
| | A1 EDGE CARD | A1 P1 - 18 | | A19 J1 - 18 | | GND | | |
| | A1 EDGE CARD | A1 P1 - 19 | | A19 J1 - 19 | | NC | | |
| | A1 EDGE CARD | A1 P1 - 20 | | A19 J1 - 20 | | NC | | |
| | A1 EDGE CARD | A1 P1 - 21 | | A19 J1 - 21 | | INTENSITY TV | | |
| | A1 EDGE CARD | A1 P1 - 22 | | A19 J1 - 22 | | INTENSITY TV | | |
| | A1 EDGE CARD | A1 P1 - 23 | | A19 J1 - 23 | | ASTIGMATISM | | |
| | A1 EDGE CARD | A1 P1 - 24 | | A19 J1 - 24 | | ASTIGMATISM | | |
| | A1 EDGE CARD | A1 P1 - 25 | | A19 J1 - 25 | | GEOMETRY | | |
| | A1 EDGE CARD | A1 P1 - 26 | | A19 J1 - 26 | | GEOMETRY | | |
| | A1 EDGE CARD | A1 P1 - 27 | | A19 J1 - 27 | | INTEN. SAMPLE V | | |
| | A1 EDGE CARD | A1 P1 - 28 | | A19 J1 - 28 | | INTEN. SAMPLE V | | |
| | A1 EDGE CARD | A1 P1 - 29 | | A19 J1 - 29 | | CRT Z-AXIS | | |
| | A1 EDGE CARD | A1 P1 - 30 | | A19 J1 - 30 | | CRT Z-AXIS | | |
| | A1 EDGE CARD | A1 P1 - 31 | | A19 J1 - 31 | | FOCUS SAMPLE V | | |
| | A1 EDGE CARD | A1 P1 - 32 | | A19 J1 - 32 | | FOCUS SAMPLE V | | |
| | A1 EDGE CARD | A1 P1 - 33 | | A19 J1 - 33 | | FOCUS TV | | |
| | A1 EDGE CARD | A1 P1 - 34 | | A19 J1 - 34 | | FOCUS TV | | |
| | A1 EDGE CARD | A1 P1 - 35 | | A19 J1 - 35 | | GND | | |
| | A1 EDGE CARD | A1 P1 - 36 | | A19 J1 - 36 | | GND | | |
| 500 | WHT HI VOLTTEF | A1A2 P2 - 1 | | A1A1 T1 - 4 | | HEATER | 10.50 | 4 |
| 501 | WHT HI VOLTTEF | A1A2 P2 - 2 | | A1A1 P2 - 2 | | CATHODE | 10.50 | 4 |
| 502 | WHT HI VOLTTEF | A1A2 P2 - 3 | | A1A1 P2 - 3 | | GRID | 11.00 | 4 |
| 503 | WHT HI VOLTTEF | A1A2 P2 - 4 | | A1A1 P2 - 4 | | FOCUS | 11.50 | 4 |
| 504 | WHT TEF 24 | A1A2 P2 - 5 | | A1A1 P2 - 5 | | GEOM | 12.50 | 5 |
| 505 | WHT TEF 24 | A1A2 P2 - 6 | | A1A1 P2 - 6 | | ASTIG | 13.00 | 5 |
| 506 | WHT TEF 24 | A1A2 P2 - 7 | | A1A1 P2 - 7 | | ACCELERATOR | 13.00 | 5 |
| 507 | WHT TEF 22 | A1A2 P2 - 8 | | A1A2 E - 8 | | $\overline{\text{VERT DEFL PLATE}}$ | 1.00 | 2 |
| 508 | WHT TEF 22 | A1A2 P2 - 9 | | A1A2 E - 9 | | VERT DEFL PLATE | 1.00 | 2 |
| 509 | WHT TEF 22 | A1A2 P2 - 10 | | A1A2 E - 10 | | $\overline{\text{HORIZ DEFL PLATE}}$ | 1.00 | 2 |
| 510 | WHT TEF 22 | A1A2 P2 - 11 | | A1A2 E - 11 | | HORIZ DEFL PLATE | 1.00 | 2 |

Table 5-2a. System Wirelist – High-Voltage Power Supply (A1) (Cont)

| 1 | 2 | 3 | 4 | 5 | 6 | 7 | 8 | 9 |
|---|---|---|---|---|---|---|---|---|
| WIRE NO. | COLOR SIZE AWG | WIRE RUNS FROM | NOTE OR VIEW | TO | NOTE OR VIEW | FUNCTION ROUTING REMARKS | APPROX LENGTH (INCHES) | USE FIND NO. |
| | | A1A2 P2 - 12 | | NC | | | | |
| | | A1A2 P2 - 13 | | NC | | | | |
| 511 | WHT HI VOLTTEF | A1A2 P2 - 14 | | A1A1 T1 - 5 | | HEATER | 10.50 | 4 |
| 512 | WHT TEF 24 | A1A2 P2 - 1 | | A1A2 P2 - 2 | | JUMPER | 1.50 | 5 |
| | (CRT DEFL PLUG) | NC | | P3 - 1 | | (PIN NOT USED) | | |
| 513 | WHT TEF 22 | A1A2 - 2 | | P3 - 2 | | VERT DEFL PLATE | 11.00 | 2 |
| 514 | WHT TEF 22 | A1A2 - 3 | | P3 - 3 | | VERT DEFL PLATE | 12.00 | 2 |
| 515 | WHT TEF 22 | A1A2 - 4 | | P3 - 4 | | HORIZ DEFL PLATE | 11.75 | 2 |
| 516 | WHT TEF 22 | A1A2 - 5 | | P3 - 5 | | HORIZ DEFL PLATE | 13.00 | 2 |
| 517 | WHT TEF 16 | A1A2 - 7 | | GND LUG | | GND | 4.00 | 3 |
| | HIGH VOLT 22 | A1A1 P5 - 1 | | CRT ANODE | | HIGH VOLTAGE +4 KV | 16.00 | |

Table 5-2b. System Wirelist–Scope Amplifier Board (A2)

| 1 | 2 | 3 | 4 | 5 | 6 | 7 | 8 | 9 |
|---|---|---|---|---|---|---|---|---|
| WIRE NO. | COLOR SIZE AWG | WIRE RUNS FROM | NOTE OR VIEW | TO | NOTE OR VIEW | FUNCTION ROUTING REMARKS | APPROX LENGTH (INCHES) | USE FIND NO. |
| | A2 EDGE CARD | A2 P1 - 1 | | A19 J2 - 1 | | GND | | |
| | A2 EDGE CARD | A2 P1 - 2 | | A19 J2 - 2 | | GND | | |
| | A2 EDGE CARD | A2 P1 - 3 | | A19 J2 - 3 | | CRT Z-AXIS | | |
| | A2 EDGE CARD | A2 P1 - 4 | | A19 J2 - 4 | | NC | | |
| | A2 EDGE CARD | A2 P1 - 5 | | A19 J2 - 5 | | NC | | |
| | A2 EDGE CARD | A2 P1 - 6 | | A19 J2 - 6 | | NC | | |
| | A2 EDGE CARD | A2 P1 - 7 | | A19 J2 - 7 | | SCOPE SWP CNTL 2 | | |
| | A2 EDGE CARD | A2 P1 - 8 | | A19 J2 - 8 | | NC | | |
| | A2 EDGE CARD | A2 P1 - 9 | | A19 J2 - 9 | | SCOPE SWP CNTL 1 | | |
| | A2 EDGE CARD | A2 P1 - 10 | | A19 J2 - 10 | | HORIZ TIME BASE EN | | |
| | A2 EDGE CARD | A2 P1 - 11 | | A19 J2 - 11 | | SCOPE SWP CNTL 0 | | |
| | A2 EDGE CARD | A2 P1 - 12 | | A19 J2 - 12 | | INT SCOPE HORIZ | | |
| | A2 EDGE CARD | A2 P1 - 13 | | A19 J2 - 13 | | SWEEP BLANKING | | |
| | A2 EDGE CARD | A2 P1 - 14 | | A19 J2 - 14 | | SCOPE MODE ENABLE | | |
| | A2 EDGE CARD | A2 P1 - 15 | | A19 J2 - 15 | | EXT HORIZ ENABLE | | |
| | A2 EDGE CARD | A2 P1 - 16 | | A19 J2 - 16 | | NC | | |
| | A2 EDGE CARD | A2 P1 - 17 | | A19 J2 - 17 | | HORIZ TO SCOPE AMP | | |
| | A2 EDGE CARD | A2 P1 - 18 | | A19 J2 - 18 | | NC | | |
| | A2 EDGE CARD | A2 P1 - 19 | | A19 J2 - 19 | | SCOPE SWP CNTL 3 | | |
| | A2 EDGE CARD | A2 P1 - 20 | | A19 J2 - 20 | | TRIG PULSE | | |
| | A2 EDGE CARD | A2 P1 - 21 | | A19 J2 - 21 | | INTENSITY TV | | |
| | A2 EDGE CARD | A2 P1 - 22 | | A19 J2 - 22 | | SYNC PRESENT | | |
| | A2 EDGE CARD | A2 P1 - 23 | | A19 J2 - 23 | | SCOPE - AXIS | | |
| | A2 EDGE CARD | A2 P1 - 24 | | A19 J2 - 24 | | AUTO/NORM TRIG-SEL | | |
| | A2 EDGE CARD | A2 P1 - 25 | | A19 J2 - 25 | | NC | | |

Table 5-2b. System Wirelist–Scope Amplifier Board (A2) (Cont)

| 1 | 2 | 3 | 4 | 5 | 6 | 7 | 8 | 9 |
|---|---|---|---|---|---|---|---|---|
| WIRE NO. | COLOR SIZE AWG | WIRE RUNS FROM | NOTE OR VIEW | TO | NOTE OR VIEW | FUNCTION ROUTING REMARKS | APPROX LENGTH (INCHES) | USE FIND NO. |
| | A2 EDGE CARD | A2 P1 - 26 | | A19 J2 - 26 | | INTENSITY SAMPLE VOLT | | |
| | A2 EDGE CARD | A2 P1 - 27 | | A19 J2 - 27 | | NC | | |
| | A2 EDGE CARD | A2 P1 - 28 | | A19 J2 - 28 | | FOCUS TV | | |
| | A2 EDGE CARD | A2 P1 - 29 | | A19 J2 - 29 | | −8V | | |
| | A2 EDGE CARD | A2 P1 - 30 | | A19 J2 - 30 | | −8V | | |
| | A2 EDGE CARD | A2 P1 - 31 | | A19 J2 - 31 | | +8V | | |
| | A2 EDGE CARD | A2 P1 - 32 | | A19 J2 - 32 | | +8V | | |
| | A2 EDGE CARD | A2 P1 - 33 | | A19 J2 - 33 | | −12V | | |
| | A2 EDGE CARD | A2 P1 - 34 | | A19 J2 - 34 | | −12V | | |
| | A2 EDGE CARD | A2 P1 - 35 | | A19 J2 - 35 | | +12V | | |
| | A2 EDGE CARD | A2 P1 - 36 | | A19 J2 - 36 | | +12V | | |
| | A2 EDGE CARD | A2 P1 - 37 | | A19 J2 - 37 | | +33V | | |
| | A2 EDGE CARD | A2 P1 - 38 | | A19 J2 - 38 | | +33V | | |
| | A2 EDGE CARD | A2 P1 - 39 | | A19 J2 - 39 | | −5V | | |
| | A2 EDGE CARD | A2 P1 - 40 | | A19 J2 - 40 | | −5V | | |
| | A2 EDGE CARD | A2 P1 - 41 | | A19 J2 - 41 | | +5V | | |
| | A2 EDGE CARD | A2 P1 - 42 | | A19 J2 - 42 | | +5V | | |
| | A2 EDGE CARD | A2 P1 - 43 | | A19 J2 - 43 | | INTENSITY LEVEL | | |
| | A2 EDGE CARD | A2 P1 - 44 | | A19 J2 - 44 | | NC | | |
| | A2 EDGE CARD | A2 P1 - 45 | | A19 J2 - 45 | | HORIZ POSITION | | |
| | A2 EDGE CARD | A2 P1 - 46 | | A19 J2 - 46 | | HIGH VOLTAGE REF | | |
| | A2 EDGE CARD | A2 P1 - 47 | | A19 J2 - 47 | | NC | | |
| | A2 EDGE CARD | A2 P1 - 48 | | A19 J2 - 48 | | VERT TO SCOPE | | |
| | A2 EDGE CARD | A2 P1 - 49 | | A19 J2 - 49 | | NC | | |
| | A2 EDGE CARD | A2 P1 - 50 | | A19 J2 - 50 | | TRACE ROTATION | | |
| | A2 EDGE CARD | A2 P1 - 51 | | A19 J2 - 51 | | NC | | |
| | A2 EDGE CARD | A2 P1 - 52 | | A19 J2 - 52 | | NC | | |
| | A2 EDGE CARD | A2 P1 - 53 | | A19 J2 - 53 | | SWEEP VERNIER VOLT | | |
| | A2 EDGE CARD | A2 P1 - 54 | | A19 J2 - 54 | | FOCUS SAMPLE VOLT | | |
| | A2 EDGE CARD | A2 P1 - 55 | | A19 J2 - 55 | | ASTIGMATISM | | |
| | A2 EDGE CARD | A2 P1 - 56 | | A19 J2 - 56 | | NC | | |
| | A2 EDGE CARD | A2 P1 - 57 | | A19 J2 - 57 | | GEOMETRY | | |
| | A2 EDGE CARD | A2 P1 - 58 | | A19 J2 - 58 | | NC | | |
| | A2 EDGE CARD | A2 P1 - 59 | | A19 J2 - 59 | | FOCUS LEVEL | | |
| | A2 EDGE CARD | A2 P1 - 60 | | A19 J2 - 60 | | NC | | |
| | A2 EDGE CARD | A2 P1 - 61 | | A19 J2 - 61 | | NC | | |
| | A2 EDGE CARD | A2 P1 - 62 | | A19 J2 - 62 | | NC | | |
| | A2 EDGE CARD | A2 P1 - 63 | | A19 J2 - 63 | | +110V | | |
| | A2 EDGE CARD | A2 P1 - 64 | | A19 J2 - 64 | | +110V | | |
| | A2 EDGE CARD | A2 P1 - 65 | | A19 J2 - 65 | | NC | | |
| | A2 EDGE CARD | A2 P1 - 66 | | A19 J2 - 66 | | NC | | |
| | A2 EDGE CARD | A2 P1 - 67 | | A19 J2 - 67 | | −110V | | |
| | A2 EDGE CARD | A2 P1 - 68 | | A19 J2 - 68 | | −110V | | |
| | A2 EDGE CARD | A2 P1 - 69 | | A19 J2 - 69 | | NC | | |
| | A2 EDGE CARD | A2 P1 - 70 | | A2 J2 - 70 | | NC | | |
| | A2 EDGE CARD | A2 P1 - 71 | | A2 J2 - 71 | | GND | | |
| | A2 EDGE CARD | A2 P1 - 72 | | A2 J2 - 72 | | GND | | |

Table 5-2b. System Wirelist–Scope Amplifier Board (A2) (Cont)

| 1 | 2 | 3 | 4 | 5 | 6 | 7 | 8 | 9 |
|---|---|---|---|---|---|---|---|---|
| WIRE NO. | COLOR SIZE AWG | WIRE RUNS FROM | NOTE OR VIEW | TO | NOTE OR VIEW | FUNCTION ROUTING REMARKS | APPROX LENGTH (INCHES) | USE FIND NO. |
| | A2 CRT DEFLECTION | A2 J3 - 1 | | A1 P3 - 1 | | NC | | |
| | A2 CRT DEFLECTION | A2 J3 - 2 | | A1 P3 - 2 | | VERT DEFL PLATE | | |
| | A2 CRT DEFLECTION | A2 J3 - 3 | | A1 P3 - 3 | | VERT DEFL PLATE | | |
| | A2 CRT DEFLECTION | A2 J3 - 4 | | A1 P3 - 4 | | HORIZ DEFL PLATE | | |
| | A2 CRT DEFLECTION | A2 J3 - 5 | | A1 P3 - 5 | | HORIZ DEFL PLATE | | |

Table 5-2c. System Wirelist – Low-Voltage Power Supply Battery Charger Board (A3)

| 1 | 2 | 3 | 4 | 5 | 6 | 7 | 8 | 9 |
|---|---|---|---|---|---|---|---|---|
| WIRE NO. | COLOR SIZE AWG | WIRE RUNS FROM | NOTE OR VIEW | TO | NOTE OR VIEW | FUNCTION ROUTING REMARKS | APPROX LENGTH (INCHES) | USE FIND NO. |
| | A3 EDGE CARD | A3 P1 - 1 | | A19 J3 - 1 | | GND | | |
| | A3 EDGE CARD | A3 P1 - 2 | | A19 J3 - 2 | | GND | | |
| | A3 EDGE CARD | A3 P1 - 3 | | A19 J3 - 3 | | GND | | |
| | A3 EDGE CARD | A3 P1 - 4 | | A19 J3 - 4 | | GND | | |
| | A3 EDGE CARD | A3 P1 - 5 | | A19 J3 - 5 | | +5V | | |
| | A3 EDGE CARD | A3 P1 - 6 | | A19 J3 - 6 | | +5V | | |
| | A3 EDGE CARD | A3 P1 - 7 | | A19 J3 - 7 | | +5V | | |
| | A3 EDGE CARD | A3 P1 - 8 | | A19 J3 - 8 | | +5V | | |
| | A3 EDGE CARD | A3 P1 - 9 | | A19 J3 - 9 | | POWER ON | | |
| | A3 EDGE CARD | A3 P1 - 10 | | A19 J3 - 10 | | NC | | |
| | A3 EDGE CARD | A3 P1 - 11 | | A19 J3 - 11 | | BATT CHG | | |
| | A3 EDGE CARD | A3 P1 - 12 | | A19 J3 - 12 | | BATT CHG | | |
| | A3 EDGE CARD | A3 P1 - 13 | | A19 J3 - 13 | | AC VOLTAGE SENSE | | |
| | A3 EDGE CARD | A3 P1 - 14 | | A19 J3 - 14 | | NC | | |
| | A3 EDGE CARD | A3 P1 - 15 | | A19 J3 - 15 | | FREQ STD SUPPLY | | |
| | A3 EDGE CARD | A3 P1 - 16 | | A19 J3 - 16 | | FREQ STD SUPPLY | | |
| | A3 EDGE CARD | A3 P1 - 17 | | A19 J3 - 17 | | −12V | | |
| | A3 EDGE CARD | A3 P1 - 18 | | A19 J3 - 18 | | −5V TO SYNTH | | |
| | A3 EDGE CARD | A3 P1 - 19 | | A19 J3 - 19 | | BLANK FOR ISOLATION | | |
| | A3 EDGE CARD | A3 P1 - 20 | | A19 J3 - 20 | | BLANK FOR ISOLATION | | |
| | A3 EDGE CARD | A3 P1 - 21 | | A19 J3 - 21 | | BLANK FOR ISOLATION | | |
| | A3 EDGE CARD | A3 P1 - 22 | | A19 J3 - 22 | | BLANK FOR ISOLATION | | |
| | A3 EDGE CARD | A3 P1 - 23 | | A19 J3 - 23 | | BLANK FOR ISOLATION | | |
| | A3 EDGE CARD | A3 P1 - 24 | | A19 J3 - 24 | | BLANK FOR ISOLATION | | |
| | A3 EDGE CARD | A3 P1 - 25 | | A19 J3 - 25 | | BLANK FOR ISOLATION | | |
| | A3 EDGE CARD | A3 P1 - 26 | | A19 J3 - 26 | | BLANK FOR ISOLATION | | |
| | A3 EDGE CARD | A3 P1 - 27 | | A19 J3 - 27 | | BLANK FOR ISOLATION | | |
| | A3 EDGE CARD | A3 P1 - 28 | | A19 J3 - 28 | | BLANK FOR ISOLATION | | |
| | A3 EDGE CARD | A3 P1 - 29 | | A19 J3 - 29 | | AC NEUT | | |
| | A3 EDGE CARD | A3 P1 - 30 | | A19 J3 - 30 | | AC NEUT | | |

Table 5-2c. System Wirelist – Low-Voltage Power Supply Battery Charger Board (A3) (Cont)

| 1 | 2 | 3 | 4 | 5 | 6 | 7 | 8 | 9 |
|---|---|---|---|---|---|---|---|---|
| WIRE NO. | COLOR SIZE AWG | WIRE RUNS FROM | NOTE OR VIEW | TO | NOTE OR VIEW | FUNCTION ROUTING REMARKS | APPROX LENGTH (INCHES) | USE FIND NO. |
| | A3 EDGE CARD | A3 P1 - 31 | | A19 J3 - 31 | | PRIMARY #2 | | |
| | A3 EDGE CARD | A3 P1 - 32 | | A19 J3 - 32 | | PRIMARY #2 | | |
| | A3 EDGE CARD | A3 P1 - 33 | | A19 J3 - 33 | | AC HOT | | |
| | A3 EDGE CARD | A3 P1 - 34 | | A19 J3 - 34 | | AC HOT | | |
| | A3 EDGE CARD | A3 P1 - 35 | | A19 J3 - 35 | | PRIMARY #1 | | |
| | A3 EDGE CARD | A3 P1 - 36 | | A19 J3 - 36 | | PRIMARY #1 | | |
| | A3 EDGE CARD | A3 P1 - 37 | | A19 J3 - 37 | | 220 LOW | | |
| | A3 EDGE CARD | A3 P1 - 38 | | A19 J3 - 38 | | 220 LOW | | |
| | A3 EDGE CARD | A3 P1 - 39 | | A19 J3 - 39 | | $V_c-$ | | |
| | A3 EDGE CARD | A3 P1 - 40 | | A19 J3 - 40 | | $V_c-$ | | |
| | A3 EDGE CARD | A3 P1 - 41 | | A19 J3 - 41 | | 110 LOW | | |
| | A3 EDGE CARD | A3 P1 - 42 | | A19 J3 - 42 | | 110 LOW | | |
| | A3 EDGE CARD | A2 P1 - 43 | | A19 J3 - 43 | | $V_c+$ | | |
| | A3 EDGE CARD | A3 P1 - 44 | | A19 J3 - 44 | | $V_c+$ | | |
| | A3 EDGE CARD | A3 P1 - 45 | | A19 J3 - 45 | | BLANK FOR ISOLATION | | |
| | A3 EDGE CARD | A3 P1 - 46 | | A19 J3 - 46 | | BLANK FOR ISOLATION | | |
| | A3 EDGE CARD | A3 P1 - 47 | | A19 J3 - 47 | | BLANK FOR ISOLATION | | |
| | A3 EDGE CARD | A3 P1 - 48 | | A19 J3 - 48 | | BLANK FOR ISOLATION | | |
| | A3 EDGE CARD | A3 P1 - 49 | | A19 J3 - 49 | | BLANK FOR ISOLATION | | |
| | A3 EDGE CARD | A3 P1 - 50 | | A19 J3 - 50 | | BLANK FOR ISOLATION | | |
| 519 | WHT TEF 24 | A3 E1 | | VR3 | 2 | +5V | 2.50 | 14 |

Table 5-2d. System Wirelist – Low-Voltage Power Supply Control Board (A4)

| 1 | 2 | 3 | 4 | 5 | 6 | 7 | 8 | 9 |
|---|---|---|---|---|---|---|---|---|
| WIRE NO. | COLOR SIZE AWG | WIRE RUNS FROM | NOTE OR VIEW | TO | NOTE OR VIEW | FUNCTION ROUTING REMARKS | APPROX LENGTH (INCHES) | USE FIND NO. |
| | A4 EDGE CARD | A4 P1 - 1 | | A19 J4 - 1 | | GND | | |
| | A4 EDGE CARD | A4 P1 - 2 | | A19 J4 - 2 | | GND | | |
| | A4 EDGE CARD | A4 P1 - 3 | | A19 J4 - 3 | | GND | | |
| | A4 EDGE CARD | A4 P1 - 4 | | A19 J4 - 4 | | GND | | |
| | A4 EDGE CARD | A4 P1 - 5 | | A19 J4 - 5 | | DC CURR SENSE RTN | | |
| | A4 EDGE CARD | A4 P1 - 6 | | A19 J4 - 6 | | DC CURR SENSE RTN | | |
| | A4 EDGE CARD | A4 P1 - 7 | | A19 J4 - 7 | | DC CURR SENSE | | |
| | A4 EDGE CARD | A4 P1 - 8 | | A19 J4 - 8 | | DC CURR SENSE | | |
| | A4 EDGE CARD | A4 P1 - 9 | | A19 J4 - 9 | | DC IN | | |
| | A4 EDGE CARD | A4 P1 - 10 | | A19 J4 - 10 | | DC IN | | |
| | A4 EDGE CARD | A4 P1 - 11 | | A19 J4 - 11 | | +12V | | |
| | A4 EDGE CARD | A4 P1 - 12 | | A19 J4 - 12 | | −12V | | |
| | A4 EDGE CARD | A4 P1 - 13 | | A19 J4 - 13 | | +5V | | |
| | A4 EDGE CARD | A4 P1 - 14 | | A19 J4 - 14 | | +5V | | |

Table 5-2d. System Wirelist – Low-Voltage Power Supply Control Board (A4) (Cont)

| 1 | 2 | 3 | 4 | 5 | 6 | 7 | 8 | 9 |
|---|---|---|---|---|---|---|---|---|
| WIRE NO. | COLOR SIZE AWG | WIRE RUNS FROM | NOTE OR VIEW | TO | NOTE OR VIEW | FUNCTION ROUTING REMARKS | APPROX LENGTH (INCHES) | USE FIND NO. |
| | A4 EDGE CARD | A4 P1 - 15 | | A19 J4 - 15 | | −5V | | |
| | A4 EDGE CARD | A4 P1 - 16 | | A19 J4 - 16 | | −5V | | |
| | A4 EDGE CARD | A4 P1 - 17 | | A19 J4 - 17 | | $\overline{\text{HV CHOPPER DR}}$ | | |
| | A4 EDGE CARD | A4 P1 - 18 | | A19 J4 - 18 | | $\overline{\text{HV CHOPPER DR}}$ | | |
| | A4 EDGE CARD | A4 P1 - 19 | | A19 J4 - 19 | | HV CHOPPER DR | | |
| | A4 EDGE CARD | A4 P1 - 20 | | A19 J4 - 20 | | HV CHOPPER DR | | |
| | A4 EDGE CARD | A4 P1 - 21 | | A19 J4 - 21 | | DC BUS | | |
| | A4 EDGE CARD | A4 P1 - 22 | | A19 J4 - 22 | | DC BUS | | |
| | A4 EDGE CARD | A4 P1 - 23 | | A19 J4 - 23 | | $\overline{\text{PWR OFF}}$ | | |
| | A4 EDGE CARD | A4 P1 - 24 | | A19 J4 - 24 | | $\overline{\text{PWR ON}}$ | | |
| | A4 EDGE CARD | A4 P1 - 25 | | A19 J4 - 25 | | AC LED | | |
| | A4 EDGE CARD | A4 P1 - 26 | | A19 J4 - 26 | | AC VOLTAGE SENSE | | |
| | A4 EDGE CARD | A4 P1 - 27 | | A19 J4 - 27 | | $\overline{\text{DC DRIVE}}$ | | |
| | A4 EDGE CARD | A4 P1 - 28 | | A19 J4 - 28 | | $\overline{\text{DC DRIVE}}$ | | |
| | A4 EDGE CARD | A4 P1 - 29 | | A19 J4 - 29 | | DC DRIVE | | |
| | A4 EDGE CARD | A4 P1 - 30 | | A19 J4 - 30 | | DC DRIVE | | |
| | A4 EDGE CARD | A4 P1 - 31 | | A19 J4 - 31 | | $\overline{\text{RELAY ON}}$ | | |
| | A4 EDGE CARD | A4 P1 - 32 | | A19 J4 - 32 | | $\overline{\text{RELAY ON}}$ | | |
| | A4 EDGE CARD | A4 P1 - 33 | | A19 J4 - 33 | | $\overline{\text{AC DRIVE}}$ | | |
| | A4 EDGE CARD | A4 P1 - 34 | | A19 J4 - 34 | | FREQ STD SUPPLY | | |
| | A4 EDGE CARD | A4 P1 - 35 | | A19 J4 - 35 | | AC DRIVE | | |
| | A4 EDGE CARD | A4 P1 - 36 | | A19 J4 - 36 | | FREQ STD SUPPLY | | |
| | A4 EDGE CARD | A4 P1 - 37 | | A19 J4 - 37 | | DC LED | | |
| | A4 EDGE CARD | A4 P1 - 38 | | A19 J4 - 38 | | AC CURRENT SENSE | | |
| | A4 EDGE CARD | A4 P1 - 39 | | A19 J4 - 39 | | $\overline{\text{AC CURRENT SENSE}}$ | | |
| | A4 EDGE CARD | A4 P1 - 40 | | A19 J4 - 40 | | GND | | |
| | A4 EDGE CARD | A4 P1 - 41 | | A19 J4 - 41 | | GND | | |
| | A4 EDGE CARD | A4 P1 - 42 | | A19 J4 - 42 | | GND | | |
| | A4 EDGE CARD | A4 P1 - 43 | | A19 J4 - 43 | | NC | | |
| | A4 EDGE CARD | A4 P1 - 44 | | A19 J4 - 44 | | NC | | |
| | A4 EDGE CARD | A4 P1 - 45 | | A19 J4 - 45 | | NC | | |
| | A4 EDGE CARD | A4 P1 - 46 | | A19 J4 - 46 | | NC | | |
| | A4 EDGE CARD | A4 P1 - 47 | | A19 J4 - 47 | | NC | | |
| | A4 EDGE CARD | A4 P1 - 48 | | A19 J4 - 48 | | NC | | |
| | A4 EDGE CARD | A4 P1 - 49 | | A19 J4 - 49 | | NC | | |
| | A4 EDGE CARD | A4 P1 - 50 | | A19 J4 - 50 | | NC | | |

Table 5-2e. System Wirelist – Low-Voltage Power Supply Output Board (A5)

| 1 | 2 | 3 | 4 | 5 | 6 | 7 | 8 | 9 |
|---|---|---|---|---|---|---|---|---|
| WIRE NO. | COLOR SIZE AWG | WIRE RUNS FROM | NOTE OR VIEW | TO | NOTE OR VIEW | FUNCTION ROUTING REMARKS | APPROX LENGTH (INCHES) | USE FIND NO. |
| | A5 EDGE CARD | A5 P1 - 1 | | A19 J5 - 1 | | GND | | |
| | A5 EDGE CARD | A5 P1 - 2 | | A19 J5 - 2 | | GND | | |
| | A5 EDGE CARD | A5 P1 - 3 | | A19 J5 - 3 | | GND | | |
| | A5 EDGE CARD | A5 P1 - 4 | | A19 J5 - 4 | | GND | | |
| | A5 EDGE CARD | A5 P1 - 5 | | A19 J5 - 5 | | +12V | | |
| | A5 EDGE CARD | A5 P1 - 6 | | A19 J5 - 6 | | +12V | | |
| | A5 EDGE CARD | A5 P1 - 7 | | A19 J5 - 7 | | +12V | | |
| | A5 EDGE CARD | A5 P1 - 8 | | A19 J5 - 8 | | +5V | | |
| | A5 EDGE CARD | A5 P1 - 9 | | A19 J5 - 9 | | +5V | | |
| | A5 EDGE CARD | A5 P1 - 10 | | A19 J5 - 10 | | +5V | | |
| | A5 EDGE CARD | A5 P1 - 11 | | A19 J5 - 11 | | −5V | | |
| | A5 EDGE CARD | A5 P1 - 12 | | A19 J5 - 12 | | −5V | | |
| | A5 EDGE CARD | A5 P1 - 13 | | A19 J5 - 13 | | −12V | | |
| | A5 EDGE CARD | A5 P1 - 14 | | A19 J5 - 14 | | −12V | | |
| | A5 EDGE CARD | A5 P1 - 15 | | A19 J5 - 15 | | XFMR DR DC | | |
| | A5 EDGE CARD | A5 P1 - 16 | | A19 J5 - 16 | | XFMR DR DC | | |
| | A5 EDGE CARD | A5 P1 - 17 | | A19 J5 - 17 | | XFMR DR DC | | |
| | A5 EDGE CARD | A5 P1 - 18 | | A19 J5 - 18 | | XFMR DR DC | | |
| | A5 EDGE CARD | A5 P1 - 19 | | A19 J5 - 19 | | DC CT | | |
| | A5 EDGE CARD | A5 P1 - 20 | | A19 J5 - 20 | | DC CT | | |
| | A5 EDGE CARD | A5 P1 - 21 | | A19 J5 - 21 | | DC CT | | |
| | A5 EDGE CARD | A5 P1 - 22 | | A19 J5 - 22 | | DC CT | | |
| | A5 EDGE CARD | A5 P1 - 23 | | A19 J5 - 23 | | DC CT | | |
| | A5 EDGE CARD | A5 P1 - 24 | | A19 J5 - 24 | | DC CT | | |
| | A5 EDGE CARD | A5 P1 - 25 | | A19 J5 - 25 | | DC CT | | |
| | A5 EDGE CARD | A5 P1 - 26 | | A19 J5 - 26 | | $\overline{\text{XFMR DR DC}}$ | | |
| | A5 EDGE CARD | A5 P1 - 27 | | A19 J5 - 27 | | $\overline{\text{XFMR DR DC}}$ | | |
| | A5 EDGE CARD | A5 P1 - 28 | | A19 J5 - 28 | | $\overline{\text{XFMR DR DC}}$ | | |
| | A5 EDGE CARD | A5 P1 - 29 | | A19 J5 - 29 | | $\overline{\text{XFMR DR DC}}$ | | |
| | A5 EDGE CARD | A5 P1 - 30 | | A19 J5 - 30 | | −110V | | |
| | A5 EDGE CARD | A5 P1 - 31 | | A19 J5 - 31 | | +33V | | |
| | A5 EDGE CARD | A5 P1 - 32 | | A19 J5 - 32 | | +33V | | |
| | A5 EDGE CARD | A5 P1 - 33 | | A19 J5 - 33 | | +110V | | |
| | A5 EDGE CARD | A5 P1 - 34 | | A19 J5 - 34 | | AC CURRENT SENSE | | |
| | A5 EDGE CARD | A5 P1 - 35 | | A19 J5 - 35 | | $\overline{\text{AC CURRENT SENSE}}$ | | |
| | A5 EDGE CARD | A5 P1 - 36 | | A19 J5 - 36 | | GND | | |
| | A5 EDGE CARD | A5 P1 - 37 | | A19 J5 - 37 | | GND | | |
| | A5 EDGE CARD | A5 P1 - 38 | | A19 J5 - 38 | | GND | | |
| | A5 EDGE CARD | A5 P1 - 39 | | A19 J5 - 39 | | BLANK FOR ISOLATION | | |
| | A5 EDGE CARD | A5 P1 - 40 | | A19 J5 - 40 | | BLANK FOR ISOLATION | | |
| | A5 EDGE CARD | A5 P1 - 41 | | A19 J5 - 41 | | BLANK FOR ISOLATION | | |
| | A5 EDGE CARD | A5 P1 - 42 | | A19 J5 - 42 | | BLANK FOR ISOLATION | | |
| | A5 EDGE CARD | A5 P1 - 43 | | A19 J5 - 43 | | BLANK FOR ISOLATION | | |
| | A5 EDGE CARD | A5 P1 - 44 | | A19 J5 - 44 | | BLANK FOR ISOLATION | | |
| | A5 EDGE CARD | A5 P1 - 45 | | A19 J5 - 45 | | BLANK FOR ISOLATION | | |
| | A5 EDGE CARD | A5 P1 - 46 | | A19 J5 - 46 | | BLANK FOR ISOLATION | | |
| | A5 EDGE CARD | A5 P1 - 47 | | A19 J5 - 47 | | $\overline{\text{XFMR DR AC}}$ | | |

Table 5-2e. System Wirelist – Low-Voltage Power Supply Output Board (A5) (Cont)

| 1 | 2 | 3 | 4 | 5 | 6 | 7 | 8 | 9 |
|---|---|---|---|---|---|---|---|---|
| WIRE NO. | COLOR SIZE AWG | WIRE RUNS FROM | NOTE OR VIEW | TO | NOTE OR VIEW | FUNCTION ROUTING REMARKS | APPROX LENGTH (INCHES) | USE FIND NO. |
| | A5 EDGE CARD | A5 P1 - 48 | | A19 J5 - 48 | | $\overline{\text{XFMR DR AC}}$ | | |
| | A5 EDGE CARD | A5 P1 - 49 | | A19 J5 - 49 | | XFMR DR AC | | |
| | A5 EDGE CARD | A5 P1 - 50 | | A19 J5 - 50 | | XFMR DR AC | | |

Table 5-2f. System Wirelist – Low-Voltage Power Supply Switcher Board (A6)

| 1 | 2 | 3 | 4 | 5 | 6 | 7 | 8 | 9 |
|---|---|---|---|---|---|---|---|---|
| WIRE NO. | COLOR SIZE AWG | WIRE RUNS FROM | NOTE OR VIEW | TO | NOTE OR VIEW | FUNCTION ROUTING REMARKS | APPROX LENGTH (INCHES) | USE FIND NO. |
| | A6 EDGE CARD | A6 P1 - 1 | | A19 J6 - 1 | | GND | | |
| | A6 EDGE CARD | A6 P1 - 2 | | A19 J6 - 2 | | GND | | |
| | A6 EDGE CARD | A6 P1 - 3 | | A19 J6 - 3 | | GND | | |
| | A6 EDGE CARD | A6 P1 - 4 | | A19 J6 - 4 | | GND | | |
| | A6 EDGE CARD | A6 P1 - 5 | | A19 J6 - 5 | | DC CURR SENSE RTN | | |
| | A6 EDGE CARD | A6 P1 - 6 | | A19 J6 - 6 | | DC CURR SENSE | | |
| | A6 EDGE CARD | A6 P1 - 7 | | A19 J6 - 7 | | DC IN | | |
| | A6 EDGE CARD | A6 P1 - 8 | | A19 J6 - 8 | | DC IN | | |
| | A6 EDGE CARD | A6 P1 - 9 | | A19 J6 - 9 | | DC IN | | |
| | A6 EDGE CARD | A6 P1 - 10 | | A19 J6 - 10 | | DC IN | | |
| | A6 EDGE CARD | A6 P1 - 11 | | A19 J6 - 11 | | DC IN | | |
| | A6 EDGE CARD | A6 P1 - 12 | | A19 J6 - 12 | | DC IN | | |
| | A6 EDGE CARD | A6 P1 - 13 | | A19 J6 - 13 | | DC IN | | |
| | A6 EDGE CARD | A6 P1 - 14 | | A19 J6 - 14 | | DC IN | | |
| | A6 EDGE CARD | A6 P1 - 15 | | A19 J6 - 15 | | DC BUS | | |
| | A6 EDGE CARD | A6 P1 - 16 | | A19 J6 - 16 | | DC BUS | | |
| | A6 EDGE CARD | A6 P1 - 17 | | A19 J6 - 17 | | XFMR DR DC | | |
| | A6 EDGE CARD | A6 P1 - 18 | | A19 J6 - 18 | | XFMR DR DC | | |
| | A6 EDGE CARD | A6 P1 - 19 | | A19 J6 - 19 | | XFMR DR DC | | |
| | A6 EDGE CARD | A6 P1 - 20 | | A19 J6 - 20 | | XFMR DR DC | | |
| | A6 EDGE CARD | A6 P1 - 21 | | A19 J6 - 21 | | DC CT | | |
| | A6 EDGE CARD | A6 P1 - 22 | | A19 J6 - 22 | | DC CT | | |
| | A6 EDGE CARD | A6 P1 - 23 | | A19 J6 - 23 | | DC CT | | |
| | A6 EDGE CARD | A6 P1 - 24 | | A19 J6 - 24 | | DC CT | | |
| | A6 EDGE CARD | A6 P1 - 25 | | A19 J6 - 25 | | DC CT | | |
| | A6 EDGE CARD | A6 P1 - 26 | | A19 J6 - 26 | | DC CT | | |
| | A6 EDGE CARD | A6 P1 - 27 | | A19 J6 - 27 | | DC CT | | |
| | A6 EDGE CARD | A6 P1 - 28 | | A19 J6 - 28 | | $\overline{\text{XFMR DR DC}}$ | | |
| | A6 EDGE CARD | A6 P1 - 29 | | A19 J6 - 29 | | $\overline{\text{XFMR DR DC}}$ | | |
| | A6 EDGE CARD | A6 P1 - 30 | | A19 J6 - 30 | | $\overline{\text{XFMR DR DC}}$ | | |
| | A6 EDGE CARD | A6 P1 - 31 | | A19 J6 - 31 | | $\overline{\text{XFMR DR DC}}$ | | |
| | A6 EDGE CARD | A6 P1 - 32 | | A19 J6 - 32 | | $\overline{\text{DC DRIVE}}$ | | |

Table 5-2f. System Wirelist – Low-Voltage Power Supply Switcher Board (A6) (Cont)

| 1 | 2 | 3 | 4 | 5 | 6 | 7 | 8 | 9 |
|---|---|---|---|---|---|---|---|---|
| WIRE NO. | COLOR SIZE AWG | WIRE RUNS FROM | NOTE OR VIEW | TO | NOTE OR VIEW | FUNCTION ROUTING REMARKS | APPROX LENGTH (INCHES) | USE FIND NO. |
| | A6 EDGE CARD | A6 P1 - 33 | | A19 J6 - 33 | | DC DRIVE | | |
| | A6 EDGE CARD | A6 P1 - 34 | | A19 J6 - 34 | | $\overline{\text{RELAY ON}}$ | | |
| | A6 EDGE CARD | A6 P1 - 35 | | A19 J6 - 35 | | $\overline{\text{AC DRIVE}}$ | | |
| | A6 EDGE CARD | A6 P1 - 36 | | A19 J6 - 36 | | AC DRIVE | | |
| | A6 EDGE CARD | A6 P1 - 37 | | A19 J6 - 37 | | GND | | |
| | A6 EDGE CARD | A6 P1 - 38 | | A19 J6 - 38 | | GND | | |
| | A6 EDGE CARD | A6 P1 - 39 | | A19 J6 - 39 | | BLANK FOR ISOLATION | | |
| | A6 EDGE CARD | A6 P1 - 40 | | A19 J6 - 40 | | BLANK FOR ISOLATION | | |
| | A6 EDGE CARD | A6 P1 - 41 | | A19 J6 - 41 | | BLANK FOR ISOLATION | | |
| | A6 EDGE CARD | A6 P1 - 42 | | A19 J6 - 42 | | BLANK FOR ISOLATION | | |
| | A6 EDGE CARD | A6 P1 - 43 | | A19 J6 - 43 | | BLANK FOR ISOLATION | | |
| | A6 EDGE CARD | A6 P1 - 44 | | A19 J6 - 44 | | BLANK FOR ISOLATION | | |
| | A6 EDGE CARD | A6 P1 - 45 | | A19 J6 - 45 | | BLANK FOR ISOLATION | | |
| | A6 EDGE CARD | A6 P1 - 46 | | A19 J6 - 46 | | BLANK FOR ISOLATION | | |
| | A6 EDGE CARD | A6 P1 - 47 | | A19 J6 - 47 | | $V_c-$ | | |
| | A6 EDGE CARD | A6 P1 - 48 | | A19 J6 - 48 | | $V_c-$ | | |
| | A6 EDGE CARD | A6 P1 - 49 | | A19 J6 - 49 | | $\overline{\text{XFMR DR AC}}$ | | |
| | A6 EDGE CARD | A6 P1 - 50 | | A19 J6 - 50 | | $\overline{\text{XFMR DR AC}}$ | | |
| | A6 EDGE CARD | A6 P1 - 51 | | A19 J6 - 51 | | XFMR DR AC | | |
| | A6 EDGE CARD | A6 P1 - 52 | | A19 J6 - 52 | | XFMR DR AC | | |
| | A6 EDGE CARD | A6 P1 - 53 | | A19 J6 - 53 | | 110 LOW | | |
| | A6 EDGE CARD | A6 P1 - 54 | | A19 J6 - 54 | | 110 LOW | | |
| | A6 EDGE CARD | A6 P1 - 55 | | A19 J6 - 55 | | $V_c+$ | | |
| | A6 EDGE CARD | A6 P1 - 56 | | A19 J6 - 56 | | $V_c+$ | | |
| | A6 EDGE CARD | A6 P1 - 57 | | A19 J6 - 57 | | BLANK FOR ISOLATION | | |
| | A6 EDGE CARD | A6 P1 - 58 | | A19 J6 - 58 | | BLANK FOR ISOLATION | | |
| | A6 EDGE CARD | A6 P1 - 59 | | A19 J6 - 59 | | BLANK FOR ISOLATION | | |
| | A6 EDGE CARD | A6 P1 - 60 | | A19 J6 - 60 | | BLANK FOR ISOLATION | | |

Table 5-2g. System Wirelist – Scope/DVM Control Board (A7)

| 1 | 2 | 3 | 4 | 5 | 6 | 7 | 8 | 9 |
|---|---|---|---|---|---|---|---|---|
| WIRE NO. | COLOR SIZE AWG | WIRE RUNS FROM | NOTE OR VIEW | TO | NOTE OR VIEW | FUNCTION ROUTING REMARKS | APPROX LENGTH (INCHES) | USE FIND NO. |
| | A7 EDGE CARD | A7 P1 - 1 | | A19 J7 - 1 | | DVM GND | | |
| | A7 EDGE CARD | A7 P1 - 2 | | A19 J7 - 2 | | DVM GND | | |
| | A7 EDGE CARD | A7 P1 - 3 | | A19 J7 - 3 | | EXT DVM TO A/D | | |
| | A7 EDGE CARD | A7 P1 - 4 | | A19 J7 - 4 | | VERT FROM RNG SW | | |
| | A7 EDGE CARD | A7 P1 - 5 | | A19 J7 - 5 | | TRIG LVL | | |
| | A7 EDGE CARD | A7 P1 - 6 | | A19 J7 - 6 | | DVM FROM RNG SW | | |
| | A7 EDGE CARD | A7 P1 - 7 | | A19 J7 - 7 | | INT DVM TO A/D | | |

Table 5-2g. System Wirelist – Scope/DVM Control Board (A7) (Cont)

| 1 | 2 | 3 | 4 | 5 | 6 | 7 | 8 | 9 |
|---|---|---|---|---|---|---|---|---|
| WIRE NO. | COLOR · SIZE AWG | WIRE RUNS FROM | NOTE OR VIEW | WIRE RUNS TO | NOTE OR VIEW | FUNCTION ROUTING REMARKS | APPROX LENGTH (INCHES) | USE FIND NO. |
| | A7 EDGE CARD | A7 P1 - 8 | | A19 J7 - 8 | | RF INPUT POWER | | |
| | A7 EDGE CARD | A7 P1 - 9 | | A19 J7 - 9 | | NC | | |
| | A7 EDGE CARD | A7 P1 - 10 | | A19 J7 - 10 | | VERT CHAR SYNC | | |
| | A7 EDGE CARD | A7 P1 - 11 | | A19 J7 - 11 | | NC | | |
| | A7 EDGE CARD | A7 P1 - 12 | | A19 J7 - 12 | | TRIG PULSE | | |
| | A7 EDGE CARD | A7 P1 - 13 | | A19 J7 - 13 | | AF ADD BUS 0 | | |
| | A7 EDGE CARD | A7 P1 - 14 | | A19 J7 - 14 | | SCOPE SWP CNTL 0 | | |
| | A7 EDGE CARD | A7 P1 - 15 | | A19 J7 - 15 | | AF ADD BUS 1 | | |
| | A7 EDGE CARD | A7 P1 - 16 | | A19 J7 - 16 | | SCOPE SWP CNTL 1 | | |
| | A7 EDGE CARD | A7 P1 - 17 | | A19 J7 - 17 | | AF ADD BUS 2 | | |
| | A7 EDGE CARD | A7 P1 - 18 | | A19 J7 - 18 | | SCOPE SWP CNTL 2 | | |
| | A7 EDGE CARD | A7 P1 - 19 | | A19 J7 - 19 | | AF ADD BUS 3 | | |
| | A7 EDGE CARD | A7 P1 - 20 | | A19 J7 - 20 | | SCOPE SWP CNTL 3 | | |
| | A7 EDGE CARD | A7 P1 - 21 | | A19 J7 - 21 | | NC | | |
| | A7 EDGE CARD | A7 P1 - 22 | | A19 J7 - 22 | | $\overline{\text{CHAR GEN RST}}$ | | |
| | A7 EDGE CARD | A7 P1 - 23 | | A19 J7 - 23 | | NC | | |
| | A7 EDGE CARD | A7 P1 - 24 | | A19 J7 - 24 | | NC | | |
| | A7 EDGE CARD | A7 P1 - 25 | | A19 J7 - 25 | | NC | | |
| | A7 EDGE CARD | A7 P1 - 26 | | A19 J7 - 26 | | NC | | |
| | A7 EDGE CARD | A7 P1 - 27 | | A19 J7 - 27 | | SPECT ANA VERT | | |
| | A7 EDGE CARD | A7 P1 - 28 | | A19 J7 - 28 | | NC | | |
| | A7 EDGE CARD | A7 P1 - 29 | | A19 J7 - 29 | | AF DATA BUS 3 | | |
| | A7 EDGE CARD | A7 P1 - 30 | | A19 J7 - 30 | | NC | | |
| | A7 EDGE CARD | A7 P1 - 31 | | A19 J7 - 31 | | AF DATA BUS 2 | | |
| | A7 EDGE CARD | A7 P1 - 32 | | A19 J7 - 32 | | NC | | |
| | A7 EDGE CARD | A7 P1 - 33 | | A19 J7 - 33 | | AF DATA BUS 1 | | |
| | A7 EDGE CARD | A7 P1 - 34 | | A19 J7 - 34 | | NC | | |
| | A7 EDGE CARD | A7 P1 - 35 | | A19 J7 - 35 | | AF DATA BUS 0 | | |
| | A7 EDGE CARD | A7 P1 - 36 | | A19 J7 - 36 | | NC | | |
| | A7 EDGE CARD | A7 P1 - 37 | | A19 J7 - 37 | | NC | | |
| | A7 EDGE CARD | A7 P1 - 38 | | A19 J7 - 38 | | ANT EN | | |
| | A7 EDGE CARD | A7 P1 - 39 | | A19 J7 - 39 | | EXT HORIZ EN | | |
| | A7 EDGE CARD | A7 P1 - 40 | | A19 J7 - 40 | | HORIZ TIME BASE EN | | |
| | A7 EDGE CARD | A7 P1 - 41 | | A19 J7 - 41 | | NC | | |
| | A7 EDGE CARD | A7 P1 - 42 | | A19 J7 - 42 | | NC | | |
| | A7 EDGE CARD | A7 P1 - 43 | | A19 J7 - 43 | | NC | | |
| | A7 EDGE CARD | A7 P1 - 44 | | A19 J7 - 44 | | $\overline{\text{LINE 1}}$ | | |
| | A7 EDGE CARD | A7 P1 - 45 | | A19 J7 - 45 | | +5V | | |
| | A7 EDGE CARD | A7 P1 - 46 | | A19 J7 - 46 | | +5V | | |
| | A7 EDGE CARD | A7 P1 - 47 | | A19 J7 - 47 | | −5V | | |
| | A7 EDGE CARD | A7 P1 - 48 | | A19 J7 - 48 | | −5V | | |
| | A7 EDGE CARD | A7 P1 - 49 | | A19 J7 - 49 | | +33V | | |
| | A7 EDGE CARD | A7 P1 - 50 | | A19 J7 - 50 | | +33V | | |
| | A7 EDGE CARD | A7 P1 - 51 | | A19 J7 - 51 | | +12V | | |
| | A7 EDGE CARD | A7 P1 - 52 | | A19 J7 - 52 | | +12V | | |
| | A7 EDGE CARD | A7 P1 - 53 | | A19 J7 - 53 | | −12V | | |
| | A7 EDGE CARD | A7 P1 - 54 | | A19 J7 - 54 | | −12V | | |

Table 5-2g. System Wirelist – Scope/DVM Control Board (A7) (Cont)

| 1 | 2 | 3 | 4 | 5 | 6 | 7 | 8 | 9 |
|---|---|---|---|---|---|---|---|---|
| WIRE NO. | COLOR SIZE AWG | WIRE RUNS FROM | NOTE OR VIEW | WIRE RUNS TO | NOTE OR VIEW | FUNCTION ROUTING REMARKS | APPROX LENGTH (INCHES) | USE FIND NO. |
| | A7 EDGE CARD | A7 P1 – 55 | | A19 J7 – 55 | | EXT FWD PWR | | |
| | A7 EDGE CARD | A7 P1 – 56 | | A19 J7 – 56 | | +8V | | |
| | A7 EDGE CARD | A7 P1 – 57 | | A19 J7 – 57 | | EXT RFL PWR | | |
| | A7 EDGE CARD | A7 P1 – 58 | | A19 J7 – 58 | | −8V | | |
| | A7 EDGE CARD | A7 P1 – 59 | | A19 J7 – 59 | | CARRIER + MOD LVL | | |
| | A7 EDGE CARD | A7 P1 – 60 | | A19 J7 – 60 | | INT SCOPE TO RNG SW | | |
| | A7 EDGE CARD | A7 P1 – 61 | | A19 J7 – 61 | | DISPERSION SWP RTN | | |
| | A7 EDGE CARD | A7 P1 – 62 | | A19 J7 – 62 | | NC | | |
| | A7 EDGE CARD | A7 P1 – 63 | | A19 J7 – 63 | | DISPERSION SWP | | |
| | A7 EDGE CARD | A7 P1 – 64 | | A19 J7 – 64 | | NC | | |
| | A7 EDGE CARD | A7 P1 – 65 | | A19 J7 – 65 | | VOL CNTL AUDIO RTN | | |
| | A7 EDGE CARD | A7 P1 – 66 | | A19 J7 – 66 | | NC | | |
| | A7 EDGE CARD | A7 P1 – 67 | | A19 J7 – 67 | | NC | | |
| | A7 EDGE CARD | A7 P1 – 68 | | A19 J7 – 68 | | $\overline{\text{AF BUS EN 1}}$ | | |
| | A7 EDGE CARD | A7 P1 – 69 | | A19 J7 – 69 | | MOD CAL AUDIO | | |
| | A7 EDGE CARD | A7 P1 – 70 | | A19 J7 – 70 | | NC | | |
| | A7 EDGE CARD | A7 P1 – 71 | | A19 J7 – 71 | | NC | | |
| | A7 EDGE CARD | A7 P1 – 72 | | A19 J7 – 72 | | INT SCOPE HORIZ | | |
| | A7 EDGE CARD | A7 P1 – 73 | | A19 J7 – 73 | | NC | | |
| | A7 EDGE CARD | A7 P1 – 74 | | A19 J7 – 74 | | VERT TO SCOPE AMP | | |
| | A7 EDGE CARD | A7 P1 – 75 | | A19 J7 – 75 | | NC | | |
| | A7 EDGE CARD | A7 P1 – 76 | | A19 J7 – 76 | | $\overline{\text{SYNC PRESENT}}$ | | |
| | A7 EDGE CARD | A7 P1 – 77 | | A19 J7 – 77 | | NC | | |
| | A7 EDGE CARD | A7 P1 – 78 | | A19 J7 – 78 | | SIG STRENGTH VOLTAGE | | |
| | A7 EDGE CARD | A7 P1 – 79 | | A19 J7 – 79 | | DEMOD CAL AUDIO | | |
| | A7 EDGE CARD | A7 P1 – 80 | | A19 J7 – 80 | | HDST AUDIO | | |
| | A7 EDGE CARD | A7 P1 – 81 | | A19 J7 – 81 | | SPKR AUDIO | | |
| | A7 EDGE CARD | A7 P1 – 82 | | A19 J7 – 82 | | SPKR AUDIO | | |
| | A7 EDGE CARD | A7 P1 – 83 | | A19 J7 – 83 | | HORIZ CHAR SYNC | | |
| | A7 EDGE CARD | A7 P1 – 84 | | A19 J7 – 84 | | SCOPE MODE EN | | |
| | A7 EDGE CARD | A7 P1 – 85 | | A19 J7 – 85 | | NC | | |
| | A7 EDGE CARD | A7 P1 – 86 | | A19 J7 – 86 | | NC | | |
| | A7 EDGE CARD | A7 P1 – 87 | | A19 J7 – 87 | | CHAR GEN Z – AXIS | | |
| | A7 EDGE CARD | A7 P1 – 88 | | A19 J7 – 88 | | SWP BLANKING | | |
| | A7 EDGE CARD | A7 P1 – 89 | | A19 J7 – 89 | | NC | | |
| | A7 EDGE CARD | A7 P1 – 90 | | A19 J7 – 90 | | $\overline{\text{SCOPE Z – AXIS}}$ | | |
| | A7 EDGE CARD | A7 P1 – 91 | | A19 J7 – 91 | | 700 KHZ IF | | |
| | A7 EDGE CARD | A7 P1 – 92 | | A19 J7 – 92 | | GND | | |
| | A7 EDGE CARD | A7 P1 – 93 | | A19 J7 – 93 | | NC | | |
| | A7 EDGE CARD | A7 P1 – 94 | | A19 J7 – 94 | | NC | | |
| | A7 EDGE CARD | A7 P1 – 95 | | A19 J7 – 95 | | 100 HZ REF | | |
| | A7 EDGE CARD | A7 P1 – 96 | | A19 J7 – 96 | | NC | | |
| | A7 EDGE CARD | A7 P1 – 97 | | A19 J7 – 97 | | DC IN | | |
| | A7 EDGE CARD | A7 P1 – 98 | | A19 J7 – 98 | | NC | | |
| | A7 EDGE CARD | A7 P1 – 99 | | A19 J7 – 99 | | GND | | |
| | A7 EDGE CARD | A7 P1 – 100 | | A19 J7 – 100 | | GND | | |
| 625 | WHT TEF 24 | A7 U1 – 1 | | A7 U3 – 8 | | JUMPER | 2.125 | |
| 626 | WHT TEF 24 | A7 U13 – 10 | | A7 R41 | | JUMPER | 2.75 | |

Table 5-2h. System Wirelist – Receiver Board (A8)

| 1 | 2 | 3 | 4 | 5 | 6 | 7 | 8 | 9 |
|---|---|---|---|---|---|---|---|---|
| WIRE NO. | COLOR SIZE AWG | WIRE RUNS FROM | NOTE OR VIEW | TO | NOTE OR VIEW | FUNCTION ROUTING REMARKS | APPROX LENGTH (INCHES) | USE FIND NO. |
| | A8 EDGE CARD | A8 P1 - 1 | | A19 J8 - 1 | | GND | | |
| | A8 EDGE CARD | A8 P1 - 2 | | A19 J8 - 2 | | GND | | |
| | A8 EDGE CARD | A8 P1 - 3 | | A19 J8 - 3 | | NC | | |
| | A8 EDGE CARD | A8 P1 - 4 | | A19 J8 - 4 | | NC | | |
| | A8 EDGE CARD | A8 P1 - 5 | | A19 J8 - 5 | | NC | | |
| | A8 EDGE CARD | A8 P1 - 6 | | A19 J8 - 6 | | NC | | |
| | A8 EDGE CARD | A8 P1 - 7 | | A19 J8 - 7 | | NC | | |
| | A8 EDGE CARD | A8 P1 - 8 | | A19 J8 - 8 | | NC | | |
| | A8 EDGE CARD | A8 P1 - 9 | | A19 J8 - 9 | | NC | | |
| | A8 EDGE CARD | A8 P1 - 10 | | A19 J8 - 10 | | NC | | |
| | A8 EDGE CARD | A8 P1 - 11 | | A19 J8 - 11 | | GND | | |
| | A8 EDGE CARD | A8 P1 - 12 | | A19 J8 - 12 | | GND | | |
| | A8 EDGE CARD | A8 P1 - 13 | | A19 J8 - 13 | | GND | | |
| | A8 EDGE CARD | A8 P1 - 14 | | A19 J8 - 14 | | GND | | |
| | A8 EDGE CARD | A8 P1 - 15 | | A19 J8 - 15 | | SYNTH 10 MHZ | | |
| | A8 EDGE CARD | A8 P1 - 16 | | A19 J8 - 16 | | NC | | |
| | A8 EDGE CARD | A8 P1 - 17 | | A19 J8 - 17 | | SPECT ANA VERT | | |
| | A8 EDGE CARD | A8 P1 - 18 | | A19 J8 - 18 | | NC | | |
| | A8 EDGE CARD | A8 P1 - 19 | | A19 J8 - 19 | | SIG STRENGTH VOLTAGE | | |
| | A8 EDGE CARD | A8 P1 - 20 | | A19 J8 - 20 | | NC | | |
| | A8 EDGE CARD | A8 P1 - 21 | | A19 J8 - 21 | | NC | | |
| | A8 EDGE CARD | A8 P1 - 22 | | A19 J8 - 22 | | NC | | |
| | A8 EDGE CARD | A8 P1 - 23 | | A19 J8 - 23 | | NC | | |
| | A8 EDGE CARD | A8 P1 - 24 | | A19 J8 - 24 | | NC | | |
| | A8 EDGE CARD | A8 P1 - 25 | | A19 J8 - 25 | | NC | | |
| | A8 EDGE CARD | A8 P1 - 26 | | A19 J8 - 26 | | NC | | |
| | A8 EDGE CARD | A8 P1 - 27 | | A19 J8 - 27 | | BFO FREQ CNTL | | |
| | A8 EDGE CARD | A8 P1 - 28 | | A19 J8 - 28 | | NC | | |
| | A8 EDGE CARD | A8 P1 - 29 | | A19 J8 - 29 | | SQUELCH LEVEL | | |
| | A8 EDGE CARD | A8 P1 - 30 | | A19 J8 - 30 | | NC | | |
| | A8 EDGE CARD | A8 P1 - 31 | | A19 J8 - 31 | | +5V | | |
| | A8 EDGE CARD | A8 P1 - 32 | | A19 J8 - 32 | | +5V | | |
| | A8 EDGE CARD | A8 P1 - 33 | | A19 J8 - 33 | | −5V | | |
| | A8 EDGE CARD | A8 P1 - 34 | | A19 J8 - 34 | | −5V | | |
| | A8 EDGE CARD | A8 P1 - 35 | | A19 J8 - 35 | | NC | | |
| | A8 EDGE CARD | A8 P1 - 36 | | A19 J8 - 36 | | NC | | |
| | A8 EDGE CARD | A8 P1 - 37 | | A19 J8 - 37 | | + 12V | | |
| | A8 EDGE CARD | A8 P1 - 38 | | A19 J8 - 38 | | + 12V | | |
| | A8 EDGE CARD | A8 P1 - 39 | | A19 J8 - 39 | | − 12V | | |
| | A8 EDGE CARD | A8 P1 - 40 | | A19 J8 - 40 | | − 12V | | |
| | A8 EDGE CARD | A8 P1 - 41 | | A19 J8 - 41 | | NC | | |
| | A8 EDGE CARD | A8 P1 - 42 | | A19 J8 - 42 | | NC | | |
| | A8 EDGE CARD | A8 P1 - 43 | | A19 J8 - 43 | | NC | | |
| | A8 EDGE CARD | A8 P1 - 44 | | A19 J8 - 44 | | NC | | |
| | A8 EDGE CARD | A8 P1 - 45 | | A19 J8 - 45 | | SYS CNTL DATA | | |
| | A8 EDGE CARD | A8 P1 - 46 | | A19 J8 - 46 | | NC | | |
| | A8 EDGE CARD | A8 P1 - 47 | | A19 J8 - 47 | | DATA CLOCK | | |

Table 5-2h. System Wirelist – Receiver Board (A8) (Cont)

| 1 | 2 | 3 | 4 | 5 | 6 | 7 | 8 | 9 |
|---|---|---|---|---|---|---|---|---|
| WIRE NO. | COLOR SIZE AWG | WIRE RUNS FROM | NOTE OR VIEW | TO | NOTE OR VIEW | FUNCTION ROUTING REMARKS | APPROX LENGTH (INCHES) | USE FIND NO. |
| | A8 EDGE CARD | A8 P1 - 48 | | A19 J8 - 48 | | NC | | |
| | A8 EDGE CARD | A8 P1 - 49 | | A19 J8 - 49 | | DATA LATCH | | |
| | A8 EDGE CARD | A8 P1 - 50 | | A19 J8 - 50 | | NC | | |
| | A8 EDGE CARD | A8 P1 - 51 | | A19 J8 - 51 | | NC | | |
| | A8 EDGE CARD | A8 P1 - 52 | | A19 J8 - 52 | | NC | | |
| | A8 EDGE CARD | A8 P1 - 53 | | A19 J8 - 53 | | NC | | |
| | A8 EDGE CARD | A8 P1 - 54 | | A19 J8 - 54 | | NC | | |
| | A8 EDGE CARD | A8 P1 - 55 | | A19 J8 - 55 | | SYNTH CNTL DATA | | |
| | A8 EDGE CARD | A8 P1 - 56 | | A19 J8 - 56 | | NC | | |
| | A8 EDGE CARD | A8 P1 - 57 | | A19 J8 - 57 | | WB SIG PRES | | |
| | A8 EDGE CARD | A8 P1 - 58 | | A19 J8 - 58 | | $\overline{\text{IF OVERLOAD}}$ | | |
| | A8 EDGE CARD | A8 P1 - 59 | | A19 J8 - 59 | | SIGNAL PRESENT | | |
| | A8 EDGE CARD | A8 P1 - 60 | | A19 J8 - 60 | | SIG PRES LED | | |
| | A8 EDGE CARD | A8 P1 - 61 | | A19 J8 - 61 | | NC | | |
| | A8 EDGE CARD | A8 P1 - 62 | | A19 J8 - 62 | | VOL CONTL AUDIO | | |
| | A8 EDGE CARD | A8 P1 - 63 | | A19 J8 - 63 | | NC | | |
| | A8 EDGE CARD | A8 P1 - 64 | | A19 J8 - 64 | | DEMOD OUT | | |
| | A8 EDGE CARD | A8 P1 - 65 | | A19 J8 - 65 | | IF/BFO FREQ | | |
| | A8 EDGE CARD | A8 P1 - 66 | | A19 J8 - 66 | | NC | | |
| | A8 EDGE CARD | A8 P1 - 67 | | A19 J8 - 67 | | DEMOD CAL AUDIO | | |
| | A8 EDGE CARD | A8 P1 - 68 | | A19 J8 - 68 | | NC | | |
| | A8 EDGE CARD | A8 P1 - 69 | | A19 J8 - 69 | | NC | | |
| | A8 EDGE CARD | A8 P1 - 70 | | A19 J8 - 70 | | 700 KHZ IF | | |
| | A8 EDGE CARD | A8 P1 - 71 | | A19 J8 - 71 | | GND | | |
| | A8 EDGE CARD | A8 P1 - 72 | | A19 J8 - 72 | | GND | | |
| | COAX 30 - P22340E001 | A8 J1 | | A17 J5 | | 10.7 MHZ IF | 14.00 | W002 |
| 612 | BARE BUS 26 | A8 C389 | | A8 C389 | | JUMPER OUT C389 | 0.625 | |
| 613 | WHT BUS 24 | A8 Q104 - E | | A8 R308 | | | 2.20 | |
| 614 | WHT BUS 24 | A8 U113 - 11 | | A8 U315 - 8 | | | 2.75 | |
| 615 | WHT BUS 24 | A8 U308 - 4 | | A8 R379 | | | 1.90 | |

Table 5-2i. System Wirelist–RF Synthesizer Module (A9)

| 1 | 2 | 3 | 4 | 5 | 6 | 7 | 8 | 9 |
|---|---|---|---|---|---|---|---|---|
| WIRE NO. | COLOR SIZE AWG | WIRE RUNS FROM | NOTE OR VIEW | TO | NOTE OR VIEW | FUNCTION ROUTING REMARKS | APPROX LENGTH (INCHES) | USE FIND NO. |
| | A9 EDGE CARD | A9 P1 - 1 | | A19 J9 - 1 | | GND | | |
| | A9 EDGE CARD | A9 P1 - 2 | | A19 J9 - 2 | | GND | | |
| | A9 EDGE CARD | A9 P1 - 3 | | A19 J9 - 3 | | DATA CLOCK | | |
| | A9 EDGE CARD | A9 P1 - 4 | | A19 J9 - 4 | | DATA CLOCK | | |
| | A9 EDGE CARD | A9 P1 - 5 | | A19 J9 - 5 | | DATA LATCH | | |
| | A9 EDGE CARD | A9 P1 - 6 | | A19 J9 - 6 | | DATA LATCH | | |

Table 5-2i. System Wirelist - RF Synthesizer Module (A9) (Cont)

| 1 | 2 | 3 | 4 | 5 | 6 | 7 | 8 | 9 |
|---|---|---|---|---|---|---|---|---|
| WIRE NO. | COLOR SIZE AWG | WIRE RUNS FROM | NOTE OR VIEW | TO | NOTE OR VIEW | FUNCTION ROUTING REMARKS | APPROX LENGTH (INCHES) | USE FIND NO. |
| | A9 EDGE CARD | A9 P1 - 7 | | A19 J9 - 7 | | 24 CNTL DATA | | |
| | A9 EDGE CARD | A9 P1 - 8 | | A19 J9 - 8 | | 24 CNTL DATA | | |
| | A9 EDGE CARD | A9 P1 - 9 | | A19 J9 - 9 | | 60.5 CNTL DATA | | |
| | A9 EDGE CARD | A9 P1 - 10 | | A19 J9 - 10 | | 60.5 CNTL DATA | | |
| | A9 EDGE CARD | A9 P1 - 11 | | A19 J9 - 11 | | SYNTH CNTL DATA | | |
| | A9 EDGE CARD | A9 P1 - 12 | | A19 J9 - 12 | | SYNTH CNTL DATA | | |
| | A9 EDGE CARD | A9 P1 - 13 | | A19 J9 - 13 | | 310 - 440 CNTL DATA | | |
| | A9 EDGE CARD | A9 P1 - 14 | | A19 J9 - 14 | | 310 - 440 CNTL DATA | | |
| | A9 EDGE CARD | A9 P1 - 15 | | A19 J9 - 15 | | WB AMP LO/HI | | |
| | A9 EDGE CARD | A9 P1 - 16 | | A19 J9 - 16 | | WB AMP LO/HI | | |
| | A9 EDGE CARD | A9 P1 - 17 | | A19 J9 - 17 | | SYNTH 10 MHZ | | |
| | A9 EDGE CARD | A9 P1 - 18 | | A19 J9 - 18 | | SYNTH 10 MHZ | | |
| | A9 EDGE CARD | A9 P1 - 19 | | A19 J9 - 19 | | GND | | |
| | A9 EDGE CARD | A9 P1 - 20 | | A19 J9 - 20 | | GND | | |
| | A9 EDGE CARD | A9 P1 - 21 | | A19 J9 - 21 | | GND | | |
| | A9 EDGE CARD | A9 P1 - 22 | | A19 J9 - 22 | | GND | | |
| | A9 EDGE CARD | A9 P1 - 23 | | A19 J9 - 23 | | GND | | |
| | A9 EDGE CARD | A9 P1 - 24 | | A19 J9 - 24 | | GND | | |
| | A9 EDGE CARD | A9 P1 - 25 | | A19 J9 - 25 | | SYNTH SWEEP | | |
| | A9 EDGE CARD | A9 P1 - 26 | | A19 J9 - 26 | | SYNTH SWEEP | | |
| | A9 EDGE CARD | A9 P1 - 27 | | A19 J9 - 27 | | GND | | |
| | A9 EDGE CARD | A9 P1 - 28 | | A19 J9 - 28 | | GND | | |
| | A9 EDGE CARD | A9 P1 - 29 | | A19 J9 - 29 | | SYNTH FM | | |
| | A9 EDGE CARD | A9 P1 - 30 | | A19 J9 - 30 | | SYNTH FM | | |
| | A9 EDGE CARD | A9 P1 - 31 | | A19 J9 - 31 | | GND | | |
| | A9 EDGE CARD | A9 P1 - 32 | | A19 J9 - 32 | | GND | | |
| | A9 EDGE CARD | A9 P1 - 33 | | A19 J9 - 33 | | 0.01 - 1 AGC | | |
| | A9 EDGE CARD | A9 P1 - 34 | | A19 J9 - 34 | | 0.01 - 1 AGC | | |
| | A9 EDGE CARD | A9 P1 - 35 | | A19 J9 - 35 | | GND | | |
| | A9 EDGE CARD | A9 P1 - 36 | | A19 J9 - 36 | | GND | | |
| | A9 EDGE CARD | A9 P1 - 37 | | A19 J9 - 37 | | GND | | |
| | A9 EDGE CARD | A9 P1 - 38 | | A19 J9 - 38 | | GND | | |
| | A9 EDGE CARD | A9 P1 - 39 | | A19 J9 - 39 | | 10 MHZ REF | | |
| | A9 EDGE CARD | A9 P1 - 40 | | A19 J9 - 40 | | 10 MHZ REF | | |
| | A9 EDGE CARD | A9 P1 - 41 | | A19 J9 - 41 | | GND | | |
| | A9 EDGE CARD | A9 P1 - 42 | | A19 J9 - 42 | | GND | | |
| | A9 EDGE CARD | A9 P1 - 43 | | A19 J9 - 43 | | +5V | | |
| | A9 EDGE CARD | A9 P1 - 44 | | A19 J9 - 44 | | +5V | | |
| | A9 EDGE CARD | A9 P1 - 45 | | A19 J9 - 45 | | -5V TO SYNTH | | |
| | A9 EDGE CARD | A9 P1 - 46 | | A19 J9 - 46 | | -5V TO SYNTH | | |
| | A9 EDGE CARD | A9 P1 - 47 | | A19 J9 - 47 | | +33V | | |
| | A9 EDGE CARD | A9 P1 - 48 | | A19 J9 - 48 | | +33V | | |
| | A9 EDGE CARD | A9 P1 - 49 | | A19 J9 - 49 | | +12V | | |
| | A9 EDGE CARD | A9 P1 - 50 | | A19 J9 - 50 | | +12V | | |
| | A9 EDGE CARD | A9 P1 - 51 | | A19 J9 - 51 | | -12V | | |
| | A9 EDGE CARD | A9 P1 - 52 | | A19 J9 - 52 | | -12V | | |
| | A9 EDGE CARD | A9 P1 - 53 | | A19 J9 - 53 | | GND | | |

Table 5-2i. System Wirelist - RF Synthesizer Module (A9) (Cont)

| 1 | 2 | 3 | 4 | 5 | 6 | 7 | 8 | 9 |
|---|---|---|---|---|---|---|---|---|
| WIRE NO. | COLOR SIZE AWG | WIRE RUNS FROM | NOTE OR VIEW | TO | NOTE OR VIEW | FUNCTION ROUTING REMARKS | APPROX LENGTH (INCHES) | USE FIND NO. |
| | A9 EDGE CARD | A9 P1 - 54 | | A19 J9 - 54 | | GND | | |
| | A9 EDGE CARD | A9 P1 - 55 | | A19 J9 - 55 | | GND | | |
| | A9 EDGE CARD | A9 P1 - 56 | | A19 J9 - 56 | | GND | | |
| | A9 EDGE CARD | A9 P1 - 57 | | A19 J9 - 57 | | GND | | |
| | A9 EDGE CARD | A9 P1 - 58 | | A19 J9 - 58 | | GND | | |
| | A9 EDGE CARD | A9 P1 - 59 | | A19 J9 - 59 | | GND | | |
| | A9 EDGE CARD | A9 P1 - 60 | | A19 J9 - 60 | | GND | | |
| | A9 EDGE CARD | A9 P1 - 61 | | A19 J9 - 61 | | GND | | |
| | A9 EDGE CARD | A9 P1 - 62 | | A19 J9 - 62 | | GND | | |
| | A9 EDGE CARD | A9 P1 - 63 | | A19 J9 - 63 | | GND | | |
| | A9 EDGE CARD | A9 P1 - 64 | | A19 J9 - 64 | | GND | | |
| | A9 EDGE CARD | A9 P1 - 65 | | A19 J9 - 65 | | GND | | |
| | A9 EDGE CARD | A9 P1 - 66 | | A19 J9 - 66 | | GND | | |
| | A9 EDGE CARD | A9 P1 - 67 | | A19 J9 - 67 | | GND | | |
| | A9 EDGE CARD | A9 P1 - 68 | | A19 J9 - 68 | | GND | | |
| | A9 EDGE CARD | A9 P1 - 69 | | A19 J9 - 69 | | GND | | |
| | A9 EDGE CARD | A9 P1 - 70 | | A19 J9 - 70 | | GND | | |
| | A9 EDGE CARD | A9 P1 - 71 | | A19 J9 - 71 | | GND | | |
| | A9 EDGE CARD | A9 P1 - 72 | | A19 J9 - 72 | | GND | | |
| W3 | COAX ASSEMBLY | A9 J1 | | A17 J4 | | SYNTH RF | | W003 |

Table 5-2j. System Wirelist – Audio Synthesizer Board (A10)

| 1 | 2 | 3 | 4 | 5 | 6 | 7 | 8 | 9 |
|---|---|---|---|---|---|---|---|---|
| WIRE NO. | COLOR SIZE AWG | WIRE RUNS FROM | NOTE OR VIEW | TO | NOTE OR VIEW | FUNCTION ROUTING REMARKS | APPROX LENGTH (INCHES) | USE FIND NO. |
| | A10 EDGE CARD | A10 P1 - 1 | | A19 J10 - 1 | | GND | | |
| | A10 EDGE CARD | A10 P1 - 2 | | A19 J10 - 2 | | GND | | |
| | A10 EDGE CARD | A10 P1 - 3 | | A19 J10 - 3 | | AF ADD BUS 0 | | |
| | A10 EDGE CARD | A10 P1 - 4 | | A19 J10 - 4 | | AF ADD BUS 0 | | |
| | A10 EDGE CARD | A10 P1 - 5 | | A19 J10 - 5 | | AF ADD BUS 1 | | |
| | A10 EDGE CARD | A10 P1 - 6 | | A19 J10 - 6 | | AF ADD BUS 1 | | |
| | A10 EDGE CARD | A10 P1 - 7 | | A19 J10 - 7 | | AF ADD BUS 2 | | |
| | A10 EDGE CARD | A10 P1 - 8 | | A19 J10 - 8 | | AF ADD BUS 2 | | |
| | A10 EDGE CARD | A10 P1 - 9 | | A19 J10 - 9 | | AF ADD BUS 3 | | |
| | A10 EDGE CARD | A10 P1 - 10 | | A19 J10 - 10 | | AF ADD BUS 3 | | |
| | A10 EDGE CARD | A10 P1 - 11 | | A19 J10 - 11 | | MIC INPUT | | |
| | A10 EDGE CARD | A10 P1 - 12 | | A19 J10 - 12 | | MIC INPUT | | |
| | A10 EDGE CARD | A10 P1 - 13 | | A19 J10 - 13 | | EXT MOD IN | | |
| | A10 EDGE CARD | A10 P1 - 14 | | A19 J10 - 14 | | EXT MOD IN | | |
| | A10 EDGE CARD | A10 P1 - 15 | | A19 J10 - 15 | | AF DATA BUS 3 | | |
| | A10 EDGE CARD | A10 P1 - 16 | | A19 J10 - 16 | | AF DATA BUS 3 | | |

Table 5-2j. System Wirelist – Audio Synthesizer Board (A10) (Cont)

| 1 | 2 | 3 | 4 | 5 | 6 | 7 | 8 | 9 |
|---|---|---|---|---|---|---|---|---|
| WIRE NO. | COLOR SIZE AWG | WIRE RUNS FROM | NOTE OR VIEW | TO | NOTE OR VIEW | FUNCTION ROUTING REMARKS | APPROX LENGTH (INCHES) | USE FIND NO. |
| | A10 EDGE CARD | A10 P1 - 17 | | A19 J10 - 17 | | AF DATA BUS 2 | | |
| | A10 EDGE CARD | A10 P1 - 18 | | A19 J10 - 18 | | AF DATA BUS 2 | | |
| | A10 EDGE CARD | A10 P1 - 19 | | A19 J10 - 19 | | AF DATA BUS 1 | | |
| | A10 EDGE CARD | A10 P1 - 20 | | A19 J10 - 20 | | AF DATA BUS 1 | | |
| | A10 EDGE CARD | A10 P1 - 21 | | A19 J10 - 21 | | AF DATA BUS 0 | | |
| | A10 EDGE CARD | A10 P1 - 22 | | A19 J10 - 22 | | AF DATA BUS 0 | | |
| | A10 EDGE CARD | A10 P1 - 23 | | A19 J10 - 23 | | EXT MOD (I) | | |
| | A10 EDGE CARD | A10 P1 - 24 | | A19 J10 - 24 | | EXT MOD (I) | | |
| | A10 EDGE CARD | A10 P1 - 25 | | A19 J10 - 25 | | INT MOD (I) | | |
| | A10 EDGE CARD | A10 P1 - 26 | | A19 J10 - 26 | | INT MOD (I) | | |
| | A10 EDGE CARD | A10 P1 - 27 | | A19 J10 - 27 | | $\overline{\text{AF BUS EN 1}}$ | | |
| | A10 EDGE CARD | A10 P1 - 28 | | A19 J10 - 28 | | $\overline{\text{AF BUS EN 1}}$ | | |
| | A10 EDGE CARD | A10 P1 - 29 | | A19 J10 - 29 | | BINARY MOD | | |
| | A10 EDGE CARD | A10 P1 - 30 | | A19 J10 - 30 | | NC | | |
| | A10 EDGE CARD | A10 P1 - 31 | | A19 J10 - 31 | | +5V | | |
| | A10 EDGE CARD | A10 P1 - 32 | | A19 J10 - 32 | | +5V | | |
| | A10 EDGE CARD | A10 P1 - 33 | | A19 J10 - 33 | | −5V | | |
| | A10 EDGE CARD | A10 P1 - 34 | | A19 J10 - 34 | | −5V | | |
| | A10 EDGE CARD | A10 P1 - 35 | | A19 J10 - 35 | | +33V | | |
| | A10 EDGE CARD | A10 P1 - 36 | | A19 J10 - 36 | | +33V | | |
| | A10 EDGE CARD | A10 P1 - 37 | | A19 J10 - 37 | | +12V | | |
| | A10 EDGE CARD | A10 P1 - 38 | | A19 J10 - 38 | | +12V | | |
| | A10 EDGE CARD | A10 P1 - 39 | | A19 J10 - 39 | | −12V | | |
| | A10 EDGE CARD | A10 P1 - 40 | | A19 J10 - 40 | | −12V | | |
| | A10 EDGE CARD | A10 P1 - 41 | | A19 J10 - 41 | | SYNTH 1 KHZ | | |
| | A10 EDGE CARD | A10 P1 - 42 | | A19 J10 - 42 | | SYNTH 1 KHZ | | |
| | A10 EDGE CARD | A10 P1 - 43 | | A19 J10 - 43 | | FP MOD OUT | | |
| | A10 EDGE CARD | A10 P1 - 44 | | A19 J10 - 44 | | FP MOD OUT | | |
| | A10 EDGE CARD | A10 P1 - 45 | | A19 J10 - 45 | | 1 KHZ SINE (I) | | |
| | A10 EDGE CARD | A10 P1 - 46 | | A19 J10 - 46 | | 1 KHZ SINE (I) | | |
| | A10 EDGE CARD | A10 P1 - 47 | | A19 J10 - 47 | | VOL CNTL AUDIO | | |
| | A10 EDGE CARD | A10 P1 - 48 | | A19 J10 - 48 | | VOL CNTL AUDIO | | |
| | A10 EDGE CARD | A10 P1 - 49 | | A19 J10 - 49 | | MOD CAL AUDIO | | |
| | A10 EDGE CARD | A10 P1 - 50 | | A19 J10 - 50 | | MOD CAL AUDIO | | |
| | A10 EDGE CARD | A10 P1 - 51 | | A19 J10 - 51 | | DSBSC MOD | | |
| | A10 EDGE CARD | A10 P1 - 52 | | A19 J10 - 52 | | DSBSC MOD | | |
| | A10 EDGE CARD | A10 P1 - 53 | | A19 J10 - 53 | | NC | | |
| | A10 EDGE CARD | A10 P1 - 54 | | A19 J10 - 54 | | NC | | |
| | A10 EDGE CARD | A10 P1 - 55 | | A19 J10 - 55 | | SYNTH FM | | |
| | A10 EDGE CARD | A10 P1 - 56 | | A19 J10 - 56 | | SYNTH FM | | |
| | A10 EDGE CARD | A10 P1 - 57 | | A19 J10 - 57 | | NC | | |
| | A10 EDGE CARD | A10 P1 - 58 | | A19 J10 - 58 | | NC | | |
| | A10 EDGE CARD | A10 P1 - 59 | | A19 J10 - 59 | | OFFSET MOD | | |
| | A10 EDGE CARD | A10 P1 - 60 | | A19 J10 - 60 | | OFFSET MOD | | |
| | A10 EDGE CARD | A10 P1 - 61 | | A19 J10 - 61 | | 5 VDC + AM MOD | | |
| | A10 EDGE CARD | A10 P1 - 62 | | A19 J10 - 62 | | 5 VDC + AM MOD | | |
| | A10 EDGE CARD | A10 P1 - 63 | | A19 J10 - 63 | | INT MOD RTN | | |

Table 5-2j. System Wirelist – Audio Synthesizer Board (A10) (Cont)

| 1 | 2 | 3 | 4 | 5 | 6 | 7 | 8 | 9 |
|---|---|---|---|---|---|---|---|---|
| WIRE NO. | COLOR SIZE AWG | WIRE RUNS FROM | NOTE OR VIEW | TO | NOTE OR VIEW | FUNCTION ROUTING REMARKS | APPROX LENGTH (INCHES) | USE FIND NO. |
| | A10 EDGE CARD | A10 P1 - 64 | | A19 J10 - 64 | | INT MOD RTN | | |
| | A10 EDGE CARD | A10 P1 - 65 | | A19 J10 - 65 | | EXT MOD RTN | | |
| | A10 EDGE CARD | A10 P1 - 66 | | A19 J10 - 66 | | EXT MOD RTN | | |
| | A10 EDGE CARD | A10 P1 - 67 | | A19 J10 - 67 | | 1 KHZ SINE RTN | | |
| | A10 EDGE CARD | A10 P1 - 68 | | A19 J10 - 68 | | 1 KHZ SINE RTN | | |
| | A10 EDGE CARD | A10 P1 - 69 | | A19 J10 - 69 | | NC | | |
| | A10 EDGE CARD | A10 P1 - 70 | | A19 J10 - 70 | | NC | | |
| | A10 EDGE CARD | A10 P1 - 71 | | A19 J10 - 71 | | GND | | |
| | A10 EDGE CARD | A10 P1 - 72 | | A19 J10 - 72 | | GND | | |

Table 5-2k. System Wirelist – Processor Interface Board (A11)

| 1 | 2 | 3 | 4 | 5 | 6 | 7 | 8 | 9 |
|---|---|---|---|---|---|---|---|---|
| WIRE NO. | COLOR SIZE AWG | WIRE RUNS FROM | NOTE OR VIEW | TO | NOTE OR VIEW | FUNCTION ROUTING REMARKS | APPROX LENGTH (INCHES) | USE FIND NO. |
| | A11 EDGE CARD | A11 P1 - 1 | | A19 J11 - 1 | | GND | | |
| | A11 EDGE CARD | A11 P1 - 2 | | A19 J11 - 2 | | GND | | |
| | A11 EDGE CARD | A11 P1 - 3 | | A19 J11 - 3 | | EXT DVM TO A/D | | |
| | A11 EDGE CARD | A11 P1 - 4 | | A19 J11 - 4 | | DVM GND | | |
| | A11 EDGE CARD | A11 P1 - 5 | | A19 J11 - 5 | | INT DVM TO A/D | | |
| | A11 EDGE CARD | A11 P1 - 6 | | A19 J11 - 6 | | NC | | |
| | A11 EDGE CARD | A11 P1 - 7 | | A19 J11 - 7 | | NC | | |
| | A11 EDGE CARD | A11 P1 - 8 | | A19 J11 - 8 | | SYNTH 10 MHZ | | |
| | A11 EDGE CARD | A11 P1 - 9 | | A19 J11 - 9 | | NC | | |
| | A11 EDGE CARD | A11 P1 - 10 | | A19 J11 - 10 | | NC | | |
| | A11 EDGE CARD | A11 P1 - 11 | | A19 J11 - 11 | | SYNTH 1 KHZ | | |
| | A11 EDGE CARD | A11 P1 - 12 | | A19 J11 - 12 | | GND | | |
| | A11 EDGE CARD | A11 P1 - 13 | | A19 J11 - 13 | | AF ADD BUS 0 | | |
| | A11 EDGE CARD | A11 P1 - 14 | | A19 J11 - 14 | | NC | | |
| | A11 EDGE CARD | A11 P1 - 15 | | A19 J11 - 15 | | AF ADD BUS 1 | | |
| | A11 EDGE CARD | A11 P1 - 16 | | A19 J11 - 16 | | GND | | |
| | A11 EDGE CARD | A11 P1 - 17 | | A19 J11 - 17 | | AF ADD BUS 2 | | |
| | A11 EDGE CARD | A11 P1 - 18 | | A19 J11 - 18 | | NC | | |
| | A11 EDGE CARD | A11 P1 - 19 | | A19 J11 - 19 | | AF ADD BUS 3 | | |
| | A11 EDGE CARD | A11 P1 - 20 | | A19 J11 - 20 | | NC | | |
| | A11 EDGE CARD | A11 P1 - 21 | | A19 J11 - 21 | | NC | | |
| | A11 EDGE CARD | A11 P1 - 22 | | A19 J11 - 22 | | NC | | |
| | A11 EDGE CARD | A11 P1 - 23 | | A19 J11 - 23 | | NC | | |
| | A11 EDGE CARD | A11 P1 - 24 | | A19 J11 - 24 | | NC | | |
| | A11 EDGE CARD | A11 P1 - 25 | | A19 J11 - 25 | | NC | | |
| | A11 EDGE CARD | A11 P1 - 26 | | A19 J11 - 26 | | NC | | |

Table 5-2k. System Wirelist – Processor Interface Board (A11) (Cont)

| 1 | 2 | 3 | 4 | 5 | 6 | 7 | 8 | 9 |
|---|---|---|---|---|---|---|---|---|
| WIRE NO. | COLOR SIZE AWG | WIRE RUNS FROM | NOTE OR VIEW | WIRE RUNS TO | NOTE OR VIEW | FUNCTION ROUTING REMARKS | APPROX LENGTH (INCHES) | USE FIND NO. |
| | A11 EDGE CARD | A11 P1 - 27 | | A19 J11 - 27 | | NC | | |
| | A11 EDGE CARD | A11 P1 - 28 | | A19 J11 - 28 | | NC | | |
| | A11 EDGE CARD | A11 P1 - 29 | | A19 J11 - 29 | | AF DATA BUS 3 | | |
| | A11 EDGE CARD | A11 P1 - 30 | | A19 J11 - 30 | | AF DATA BUS 3 | | |
| | A11 EDGE CARD | A11 P1 - 31 | | A19 J11 - 31 | | AF DATA BUS 2 | | |
| | A11 EDGE CARD | A11 P1 - 32 | | A19 J11 - 32 | | AF DATA BUS 2 | | |
| | A11 EDGE CARD | A11 P1 - 33 | | A19 J11 - 33 | | AF DATA BUS 1 | | |
| | A11 EDGE CARD | A11 P1 - 34 | | A19 J11 - 34 | | AF DATA BUS 1 | | |
| | A11 EDGE CARD | A11 P1 - 35 | | A19 J11 - 35 | | AF DATA BUS 0 | | |
| | A11 EDGE CARD | A11 P1 - 36 | | A19 J11 - 36 | | AF DATA BUS 0 | | |
| | A11 EDGE CARD | A11 P1 - 37 | | A19 J11 - 37 | | 24 CNTL DATA | | |
| | A11 EDGE CARD | A11 P1 - 38 | | A19 J11 - 38 | | 24 CNTL DATA | | |
| | A11 EDGE CARD | A11 P1 - 39 | | A19 J11 - 39 | | 60.5 CNTL DATA | | |
| | A11 EDGE CARD | A11 P1 - 40 | | A19 J11 - 40 | | 60.5 CNTL DATA | | |
| | A11 EDGE CARD | A11 P1 - 41 | | A19 J11 - 41 | | SYS CNTL DATA | | |
| | A11 EDGE CARD | A11 P1 - 42 | | A19 J11 - 42 | | SYS CNTL DATA | | |
| | A11 EDGE CARD | A11 P1 - 43 | | A19 J11 - 43 | | DATA LATCH | | |
| | A11 EDGE CARD | A11 P1 - 44 | | A19 J11 - 44 | | DATA LATCH | | |
| | A11 EDGE CARD | A11 P1 - 45 | | A19 J11 - 45 | | +5V | | |
| | A11 EDGE CARD | A11 P1 - 46 | | A19 J11 - 46 | | +5V | | |
| | A11 EDGE CARD | A11 P1 - 47 | | A19 J11 - 47 | | −5V | | |
| | A11 EDGE CARD | A11 P1 - 48 | | A19 J11 - 48 | | −5V | | |
| | A11 EDGE CARD | A11 P1 - 49 | | A19 J11 - 49 | | DATA CLOCK | | |
| | A11 EDGE CARD | A11 P1 - 50 | | A19 J11 - 50 | | PA 0 | | |
| | A11 EDGE CARD | A11 P1 - 51 | | A19 J11 - 51 | | +12V | | |
| | A11 EDGE CARD | A11 P1 - 52 | | A19 J11 - 52 | | +12V | | |
| | A11 EDGE CARD | A11 P1 - 53 | | A19 J11 - 53 | | −12V | | |
| | A11 EDGE CARD | A11 P1 - 54 | | A19 J11 - 54 | | −12V | | |
| | A11 EDGE CARD | A11 P1 - 55 | | A19 J11 - 55 | | NC | | |
| | A11 EDGE CARD | A11 P1 - 56 | | A19 J11 - 56 | | OFFSET DATA | | |
| | A11 EDGE CARD | A11 P1 - 57 | | A19 J11 - 57 | | 310 - 440 CNTL DATA | | |
| | A11 EDGE CARD | A11 P1 - 58 | | A19 J11 - 58 | | $\overline{\text{NMI}}$ | | |
| | A11 EDGE CARD | A11 P1 - 59 | | A19 J11 - 59 | | NC | | |
| | A11 EDGE CARD | A11 P1 - 60 | | A19 J11 - 60 | | INT FREQ CNTR | | |
| | A11 EDGE CARD | A11 P1 - 61 | | A19 J11 - 61 | | EXT FREQ CNTR | | |
| | A11 EDGE CARD | A11 P1 - 62 | | A19 J11 - 62 | | NC | | |
| | A11 EDGE CARD | A11 P1 - 63 | | A19 J11 - 63 | | $\overline{\text{EXT FREQ CNTR}}$ | | |
| | A11 EDGE CARD | A11 P1 - 64 | | A19 J11 - 64 | | NC | | |
| | A11 EDGE CARD | A11 P1 - 65 | | A19 J11 - 65 | | IF/BFO FREQ | | |
| | A11 EDGE CARD | A11 P1 - 66 | | A19 J11 - 66 | | NC | | |
| | A11 EDGE CARD | A11 P1 - 67 | | A19 J11 - 67 | | 100 HZ REF | | |
| | A11 EDGE CARD | A11 P1 - 68 | | A19 J11 - 68 | | $\overline{\text{AF BUS EN 2}}$ | | |
| | A11 EDGE CARD | A11 P1 - 69 | | A19 J11 - 69 | | $\overline{\text{RESET}}$ | | |
| | A11 EDGE CARD | A11 P1 - 70 | | A19 J11 - 70 | | $\overline{\text{IRQ}}$ | | |
| | A11 EDGE CARD | A11 P1 - 71 | | A19 J11 - 71 | | A1 | | |
| | A11 EDGE CARD | A11 P1 - 72 | | A19 J11 - 72 | | A0 | | |
| | A11 EDGE CARD | A11 P1 - 73 | | A19 J11 - 73 | | A3 | | |

Table 5-2k. System Wirelist – Processor Interface Board (A11) (Cont)

| 1 | 2 | 3 | 4 | 5 | 6 | 7 | 8 | 9 |
|---|---|---|---|---|---|---|---|---|
| WIRE NO. | COLOR SIZE AWG | WIRE RUNS FROM | NOTE OR VIEW | TO | NOTE OR VIEW | FUNCTION ROUTING REMARKS | APPROX LENGTH (INCHES) | USE FIND NO. |
| | A11 EDGE CARD | A11 P1 - 74 | | A19 J11 - 74 | | A2 | | |
| | A11 EDGE CARD | A11 P1 - 75 | | A19 J11 - 75 | | A5 | | |
| | A11 EDGE CARD | A11 P1 - 76 | | A19 J11 - 76 | | A4 | | |
| | A11 EDGE CARD | A11 P1 - 77 | | A19 J11 - 77 | | A7 | | |
| | A11 EDGE CARD | A11 P1 - 78 | | A19 J11 - 78 | | A6 | | |
| | A11 EDGE CARD | A11 P1 - 79 | | A19 J11 - 79 | | A9 | | |
| | A11 EDGE CARD | A11 P1 - 80 | | A19 J11 - 80 | | A8 | | |
| | A11 EDGE CARD | A11 P1 - 81 | | A19 J11 - 81 | | A11 | | |
| | A11 EDGE CARD | A11 P1 - 82 | | A19 J11 - 82 | | A10 | | |
| | A11 EDGE CARD | A11 P1 - 83 | | A19 J11 - 83 | | A13 | | |
| | A11 EDGE CARD | A11 P1 - 84 | | A19 J11 - 84 | | A12 | | |
| | A11 EDGE CARD | A11 P1 - 85 | | A19 J11 - 85 | | A15 | | |
| | A11 EDGE CARD | A11 P1 - 86 | | A19 J11 - 86 | | A14 | | |
| | A11 EDGE CARD | A11 P1 - 87 | | A19 J11 - 87 | | $\overline{\text{I/O EN}}$ | | |
| | A11 EDGE CARD | A11 P1 - 88 | | A19 J11 - 88 | | E | | |
| | A11 EDGE CARD | A11 P1 - 89 | | A19 J11 - 89 | | Q | | |
| | A11 EDGE CARD | A11 P1 - 90 | | A19 J11 - 90 | | R/$\overline{\text{W}}$ | | |
| | A11 EDGE CARD | A11 P1 - 91 | | A19 J11 - 91 | | D1 | | |
| | A11 EDGE CARD | A11 P1 - 92 | | A19 J11 - 92 | | D0 | | |
| | A11 EDGE CARD | A11 P1 - 93 | | A19 J11 - 93 | | D3 | | |
| | A11 EDGE CARD | A11 P1 - 94 | | A19 J11 - 94 | | D2 | | |
| | A11 EDGE CARD | A11 P1 - 95 | | A19 J11 - 95 | | D5 | | |
| | A11 EDGE CARD | A11 P1 - 96 | | A19 J11 - 96 | | D4 | | |
| | A11 EDGE CARD | A11 P1 - 97 | | A19 J11 - 97 | | D7 | | |
| | A11 EDGE CARD | A11 P1 - 98 | | A19 J11 - 98 | | D6 | | |
| | A11 EDGE CARD | A11 P1 - 99 | | A19 J11 - 99 | | GND | | |
| | A11 EDGE CARD | A11 P1 - 100 | | A19 J11 - 100 | | GND | | |

Table 5 – 2l. System Wirelist – Cellular Radio Option Board (A12)

| 1 | 2 | 3 | 4 | 5 | 6 | 7 | 8 | 9 |
|---|---|---|---|---|---|---|---|---|
| WIRE NO. | COLOR SIZE AWG | WIRE RUNS FROM | NOTE OR VIEW | TO | NOTE OR VIEW | FUNCTION ROUTING REMARKS | APPROX LENGTH (INCHES) | USE FIND NO. |
| | A12 EDGE CARD | A12 P1 - 1 | | A19 J12 - 1 | | GND | | |
| | A12 EDGE CARD | A12 P1 - 2 | | A19 J12 - 2 | | GND | | |
| | A12 EDGE CARD | A12 P1 - 3 | | A19 J12 - 3 | | AM MOD + DC REF (I) | | |
| | A12 EDGE CARD | A12 P1 - 4 | | A19 J12 - 4 | | AM MOD + DC REF (O) | | |
| | A12 EDGE CARD | A12 P1 - 5 | | A19 J12 - 5 | | OPT A ENABLE | | |
| | A12 EDGE CARD | A12 P1 - 6 | | A19 J12 - 6 | | 5 VDC + AM MOD | | |
| | A12 EDGE CARD | A12 P1 - 7 | | A19 J12 - 7 | | NC | | |
| | A12 EDGE CARD | A12 P1 - 8 | | A19 J12 - 8 | | NC | | |

Table 5 - 21. System Wirelist - Cellular Radio Option Board (A12) (Cont)

| 1 | 2 | 3 | 4 | 5 | 6 | 7 | 8 | 9 |
|---|---|---|---|---|---|---|---|---|
| WIRE NO. | COLOR SIZE AWG | WIRE RUNS FROM | NOTE OR VIEW | TO | NOTE OR VIEW | FUNCTION ROUTING REMARKS | APPROX LENGTH (INCHES) | USE FIND NO. |
| | A12 EDGE CARD | A12 P1 - 9 | | A19 J12 - 9 | | NC | | |
| | A12 EDGE CARD | A12 P1 - 10 | | A19 J12 - 10 | | NC | | |
| | A12 EDGE CARD | A12 P1 - 11 | | A19 J12 - 11 | | NC | | |
| | A12 EDGE CARD | A12 P1 - 12 | | A19 J12 - 12 | | NC | | |
| | A12 EDGE CARD | A12 P1 - 13 | | A19 J12 - 13 | | MIC INPUT | | |
| | A12 EDGE CARD | A12 P1 - 14 | | A19 J12 - 14 | | NC | | |
| | A12 EDGE CARD | A12 P1 - 15 | | A19 J12 - 15 | | EXT MOD INPUT | | |
| | A12 EDGE CARD | A12 P1 - 16 | | A19 J12 - 16 | | NC | | |
| | A12 EDGE CARD | A12 P1 - 17 | | A19 J12 - 17 | | NC | | |
| | A12 EDGE CARD | A12 P1 - 18 | | A19 J12 - 18 | | NC | | |
| | A12 EDGE CARD | A12 P1 - 19 | | A19 J12 - 19 | | DEMOD CAL AUDIO | | |
| | A12 EDGE CARD | A12 P1 - 20 | | A19 J12 - 20 | | POWER ON | | |
| | A12 EDGE CARD | A12 P1 - 21 | | A19 J12 - 21 | | NC | | |
| | A12 EDGE CARD | A12 P1 - 22 | | A19 J12 - 22 | | VOL CNTL AUDIO | | |
| | A12 EDGE CARD | A12 P1 - 23 | | A19 J12 - 23 | | $\overline{\text{ROM-P7}}$ | | |
| | A12 EDGE CARD | A12 P1 - 24 | | A19 J12 - 24 | | $\overline{\text{ROM-P6}}$ | | |
| | A12 EDGE CARD | A12 P1 - 25 | | A19 J12 - 25 | | NC | | |
| | A12 EDGE CARD | A12 P1 - 26 | | A19 J12 - 26 | | $\overline{\text{ROM-P10}}$ | | |
| | A12 EDGE CARD | A12 P1 - 27 | | A19 J12 - 27 | | NC | | |
| | A12 EDGE CARD | A12 P1 - 28 | | A19 J12 - 28 | | 1 KHZ SINE (I) | | |
| | A12 EDGE CARD | A12 P1 - 29 | | A19 J12 - 29 | | 1 KHZ SINE RTN (I) | | |
| | A12 EDGE CARD | A12 P1 - 30 | | A19 J12 - 30 | | 1 KHZ SINE RTN (O) | | |
| | A12 EDGE CARD | A12 P1 - 31 | | A19 J12 - 31 | | 1 KHZ SINE RTN | | |
| | A12 EDGE CARD | A12 P1 - 32 | | A19 J12 - 32 | | $\overline{\text{ROM-P5}}$ | | |
| | A12 EDGE CARD | A12 P1 - 33 | | A19 J12 - 33 | | $\overline{\text{ROM-P8}}$ | | |
| | A12 EDGE CARD | A12 P1 - 34 | | A19 J12 - 34 | | EXT MOD (I) | | |
| | A12 EDGE CARD | A12 P1 - 35 | | A19 J12 - 35 | | EXT MOD RTN (I) | | |
| | A12 EDGE CARD | A12 P1 - 36 | | A19 J12 - 36 | | EXT MOD RTN (O) | | |
| | A12 EDGE CARD | A12 P1 - 37 | | A19 J12 - 37 | | EXT MOD RTN | | |
| | A12 EDGE CARD | A12 P1 - 38 | | A19 J12 - 38 | | NC | | |
| | A12 EDGE CARD | A12 P1 - 39 | | A19 J12 - 39 | | NC | | |
| | A12 EDGE CARD | A12 P1 - 40 | | A19 J12 - 40 | | INT MOD (I) | | |
| | A12 EDGE CARD | A12 P1 - 41 | | A19 J12 - 41 | | INT MOD RTN (I) | | |
| | A12 EDGE CARD | A12 P1 - 42 | | A19 J12 - 42 | | INT MOD RTN (O) | | |
| | A12 EDGE CARD | A12 P1 - 43 | | A19 J12 - 43 | | INT MOD RTN | | |
| | A12 EDGE CARD | A12 P1 - 44 | | A19 J12 - 44 | | INT SCOPE TO RNG SW | | |
| | A12 EDGE CARD | A12 P1 - 45 | | A19 J12 - 45 | | +5V | | |
| | A12 EDGE CARD | A12 P1 - 46 | | A19 J12 - 46 | | +5V | | |
| | A12 EDGE CARD | A12 P1 - 47 | | A19 J12 - 47 | | -5V | | |
| | A12 EDGE CARD | A12 P1 - 48 | | A19 J12 - 48 | | -5V | | |
| | A12 EDGE CARD | A12 P1 - 49 | | A19 J12 - 49 | | +33V | | |
| | A12 EDGE CARD | A12 P1 - 50 | | A19 J12 - 50 | | +33V | | |
| | A12 EDGE CARD | A12 P1 - 51 | | A19 J12 - 51 | | +12V | | |
| | A12 EDGE CARD | A12 P1 - 52 | | A19 J12 - 52 | | +12V | | |
| | A12 EDGE CARD | A12 P1 - 53 | | A19 J12 - 53 | | -12V | | |
| | A12 EDGE CARD | A12 P1 - 54 | | A19 J12 - 54 | | -12V | | |
| | A12 EDGE CARD | A12 P1 - 55 | | A19 J12 - 55 | | INT FREQ CNTR | | |

Table 5 – 21. System Wirelist – Cellular Radio Option Board (A12) (Cont)

| 1 | 2 | 3 | 4 | 5 | 6 | 7 | 8 | 9 |
|---|---|---|---|---|---|---|---|---|
| WIRE NO. | COLOR / SIZE AWG | WIRE RUNS FROM | NOTE OR VIEW | WIRE RUNS TO | NOTE OR VIEW | FUNCTION ROUTING REMARKS | APPROX LENGTH (INCHES) | USE FIND NO. |
| | A12 EDGE CARD | A12 P1 - 56 | | A19 J12 - 56 | | $V_{pp}$ | | |
| | A12 EDGE CARD | A12 P1 - 57 | | A19 J12 - 57 | | $\overline{PGM}$ | | |
| | A12 EDGE CARD | A12 P1 - 58 | | A19 J12 - 58 | | $\overline{NMI}$ | | |
| | A12 EDGE CARD | A12 P1 - 59 | | A19 J12 - 59 | | $\overline{ROM\text{-}P3}$ | | |
| | A12 EDGE CARD | A12 P1 - 60 | | A19 J12 - 60 | | $\overline{ROM\text{-}P1}$ | | |
| | A12 EDGE CARD | A12 P1 - 61 | | A19 J12 - 61 | | $\overline{ROM\text{-}P0}$ | | |
| | A12 EDGE CARD | A12 P1 - 62 | | A19 J12 - 62 | | $\overline{ROM\text{-}P14}$ | | |
| | A12 EDGE CARD | A12 P1 - 63 | | A19 J12 - 63 | | $\overline{ROM\text{-}P15}$ | | |
| | A12 EDGE CARD | A12 P1 - 64 | | A19 J12 - 64 | | $\overline{FIRQ}$ | | |
| | A12 EDGE CARD | A12 P1 - 65 | | A19 J12 - 65 | | $\overline{ROM\text{-}P12}$ | | |
| | A12 EDGE CARD | A12 P1 - 66 | | A19 J12 - 66 | | $\overline{XRAM}$ | | |
| | A12 EDGE CARD | A12 P1 - 67 | | A19 J12 - 67 | | $\overline{ROM\text{-}P11}$ | | |
| | A12 EDGE CARD | A12 P1 - 68 | | A19 J12 - 68 | | $\overline{ROM\text{-}P9}$ | | |
| | A12 EDGE CARD | A12 P1 - 69 | | A19 J12 - 69 | | $\overline{RESET}$ | | |
| | A12 EDGE CARD | A12 P1 - 70 | | A19 J12 - 70 | | $\overline{IRQ}$ | | |
| | A12 EDGE CARD | A12 P1 - 71 | | A19 J12 - 71 | | A1 | | |
| | A12 EDGE CARD | A12 P1 - 72 | | A19 J12 - 72 | | A0 | | |
| | A12 EDGE CARD | A12 P1 - 73 | | A19 J12 - 73 | | A3 | | |
| | A12 EDGE CARD | A12 P1 - 74 | | A19 J12 - 74 | | A2 | | |
| | A12 EDGE CARD | A12 P1 - 75 | | A19 J12 - 75 | | A5 | | |
| | A12 EDGE CARD | A12 P1 - 76 | | A19 J12 - 76 | | A4 | | |
| | A12 EDGE CARD | A12 P1 - 77 | | A19 J12 - 77 | | A7 | | |
| | A12 EDGE CARD | A12 P1 - 78 | | A19 J12 - 78 | | A6 | | |
| | A12 EDGE CARD | A12 P1 - 79 | | A19 J12 - 79 | | A9 | | |
| | A12 EDGE CARD | A12 P1 - 80 | | A19 J12 - 80 | | A8 | | |
| | A12 EDGE CARD | A12 P1 - 81 | | A19 J12 - 81 | | A11 | | |
| | A12 EDGE CARD | A12 P1 - 82 | | A19 J12 - 82 | | A10 | | |
| | A12 EDGE CARD | A12 P1 - 83 | | A19 J12 - 83 | | A13 | | |
| | A12 EDGE CARD | A12 P1 - 84 | | A19 J12 - 84 | | A12 | | |
| | A12 EDGE CARD | A12 P1 - 85 | | A19 J12 - 85 | | A15 | | |
| | A12 EDGE CARD | A12 P1 - 86 | | A19 J12 - 86 | | A14 | | |
| | A12 EDGE CARD | A12 P1 - 87 | | A19 J12 - 87 | | $\overline{I/O\ EN}$ | | |
| | A12 EDGE CARD | A12 P1 - 88 | | A19 J12 - 88 | | E | | |
| | A12 EDGE CARD | A12 P1 - 89 | | A19 J12 - 89 | | Q | | |
| | A12 EDGE CARD | A12 P1 - 90 | | A19 J12 - 90 | | R/$\overline{W}$ | | |
| | A12 EDGE CARD | A12 P1 - 91 | | A19 J12 - 91 | | D1 | | |
| | A12 EDGE CARD | A12 P1 - 92 | | A19 J12 - 92 | | D0 | | |
| | A12 EDGE CARD | A12 P1 - 93 | | A19 J12 - 93 | | D3 | | |
| | A12 EDGE CARD | A12 P1 - 94 | | A19 J12 - 94 | | D2 | | |
| | A12 EDGE CARD | A12 P1 - 95 | | A19 J12 - 95 | | D5 | | |
| | A12 EDGE CARD | A12 P1 - 96 | | A19 J12 - 96 | | D4 | | |
| | A12 EDGE CARD | A12 P1 - 97 | | A19 J12 - 97 | | D7 | | |
| | A12 EDGE CARD | A12 P1 - 98 | | A19 J12 - 98 | | D6 | | |
| | A12 EDGE CARD | A12 P1 - 99 | | A19 J12 - 99 | | GND | | |
| | A12 EDGE CARD | A12 P1 - 100 | | A19 J12 - 100 | | GND | | |

Table 5-2m. System Wirelist – IEEE Interface Option Board (A13)

| 1 | 2 | 3 | 4 | 5 | 6 | 7 | 8 | 9 |
|---|---|---|---|---|---|---|---|---|
| WIRE NO. | COLOR SIZE AWG | WIRE RUNS FROM | NOTE OR VIEW | TO | NOTE OR VIEW | FUNCTION ROUTING REMARKS | APPROX LENGTH (INCHES) | USE FIND NO. |
| | A13 EDGE CARD | A13 P1 - 1 | | A19 J13 - 1 | | GND | | |
| | A13 EDGE CARD | A13 P1 - 2 | | A19 J13 - 2 | | GND | | |
| | A13 EDGE CARD | A13 P1 - 3 | | A19 J13 - 3 | | AM MOD + DC REF (I) | | |
| | A13 EDGE CARD | A13 P1 - 4 | | A19 J13 - 4 | | AM MOD + DC REF (O) | | |
| | A13 EDGE CARD | A13 P1 - 5 | | A19 J13 - 5 | | OPT B ENABLE | | |
| | A13 EDGE CARD | A13 P1 - 6 | | A19 J13 - 6 | | 5 VDC + AM MOD | | |
| | A13 EDGE CARD | A13 P1 - 7 | | A19 J13 - 7 | | NC | | |
| | A13 EDGE CARD | A13 P1 - 8 | | A19 J13 - 8 | | NC | | |
| | A13 EDGE CARD | A13 P1 - 9 | | A19 J13 - 9 | | NC | | |
| | A13 EDGE CARD | A13 P1 - 10 | | A19 J13 - 10 | | NC | | |
| | A13 EDGE CARD | A13 P1 - 11 | | A19 J13 - 11 | | NC | | |
| | A13 EDGE CARD | A13 P1 - 12 | | A19 J13 - 12 | | NC | | |
| | A13 EDGE CARD | A13 P1 - 13 | | A19 J13 - 13 | | MIC INPUT | | |
| | A13 EDGE CARD | A13 P1 - 14 | | A19 J13 - 14 | | NC | | |
| | A13 EDGE CARD | A13 P1 - 15 | | A19 J13 - 15 | | EXT MOD INPUT | | |
| | A13 EDGE CARD | A13 P1 - 16 | | A19 J13 - 16 | | NC | | |
| | A13 EDGE CARD | A13 P1 - 17 | | A19 J13 - 17 | | NC | | |
| | A13 EDGE CARD | A13 P1 - 18 | | A19 J13 - 18 | | NC | | |
| | A13 EDGE CARD | A13 P1 - 19 | | A19 J13 - 19 | | DEMOD CAL AUDIO | | |
| | A13 EDGE CARD | A13 P1 - 20 | | A19 J13 - 20 | | $\overline{\text{POWER ON}}$ | | |
| | A13 EDGE CARD | A13 P1 - 21 | | A19 J13 - 21 | | NC | | |
| | A13 EDGE CARD | A13 P1 - 22 | | A19 J13 - 22 | | VOL CNTL AUDIO | | |
| | A13 EDGE CARD | A13 P1 - 23 | | A19 J13 - 23 | | $\overline{\text{ROM-P7}}$ | | |
| | A13 EDGE CARD | A13 P1 - 24 | | A19 J13 - 24 | | $\overline{\text{ROM-P6}}$ | | |
| | A13 EDGE CARD | A13 P1 - 25 | | A19 J13 - 25 | | NC | | |
| | A13 EDGE CARD | A13 P1 - 26 | | A19 J13 - 26 | | $\overline{\text{ROM-P10}}$ | | |
| | A13 EDGE CARD | A13 P1 - 27 | | A19 J13 - 27 | | NC | | |
| | A13 EDGE CARD | A13 P1 - 28 | | A19 J13 - 28 | | 1 KHZ SINE (I) | | |
| | A13 EDGE CARD | A13 P1 - 29 | | A19 J13 - 29 | | 1 KHZ SINE RTN (I) | | |
| | A13 EDGE CARD | A13 P1 - 30 | | A19 J13 - 30 | | 1 KHZ SINE RTN (O) | | |
| | A13 EDGE CARD | A13 P1 - 31 | | A19 J13 - 31 | | 1 KHZ SINE RTN | | |
| | A13 EDGE CARD | A13 P1 - 32 | | A19 J13 - 32 | | $\overline{\text{ROM-P5}}$ | | |
| | A13 EDGE CARD | A13 P1 - 33 | | A19 J13 - 33 | | $\overline{\text{ROM-P8}}$ | | |
| | A13 EDGE CARD | A13 P1 - 34 | | A19 J13 - 34 | | EXT MOD (I) | | |
| | A13 EDGE CARD | A13 P1 - 35 | | A19 J13 - 35 | | EXT MOD RTN (I) | | |
| | A13 EDGE CARD | A13 P1 - 36 | | A19 J13 - 36 | | EXT MOD RTN (O) | | |
| | A13 EDGE CARD | A13 P1 - 37 | | A19 J13 - 37 | | EXT MOD RTN | | |
| | A13 EDGE CARD | A13 P1 - 38 | | A19 J13 - 38 | | NC | | |
| | A13 EDGE CARD | A13 P1 - 39 | | A19 J13 - 39 | | NC | | |
| | A13 EDGE CARD | A13 P1 - 40 | | A19 J13 - 40 | | INT MOD (I) | | |
| | A13 EDGE CARD | A13 P1 - 41 | | A19 J13 - 41 | | INT MOD RTN (I) | | |
| | A13 EDGE CARD | A13 P1 - 42 | | A19 J13 - 42 | | INT MOD RTN (O) | | |
| | A13 EDGE CARD | A13 P1 - 43 | | A19 J13 - 43 | | INT MOD RTN | | |
| | A13 EDGE CARD | A13 P1 - 44 | | A19 J13 - 44 | | INT SCOPE TO RNG SW | | |
| | A13 EDGE CARD | A13 P1 - 45 | | A19 J13 - 45 | | +5V | | |
| | A13 EDGE CARD | A13 P1 - 46 | | A19 J13 - 46 | | +5V | | |
| | A13 EDGE CARD | A13 P1 - 47 | | A19 J13 - 47 | | −5V | | |

Table 5-2m. System Wirelist – IEEE Interface Option Board (A13) (Cont)

| 1 | 2 | 3 | 4 | 5 | 6 | 7 | 8 | 9 |
|---|---|---|---|---|---|---|---|---|
| WIRE NO. | COLOR SIZE AWG | WIRE RUNS FROM | NOTE OR VIEW | TO | NOTE OR VIEW | FUNCTION ROUTING REMARKS | APPROX LENGTH (INCHES) | USE FIND NO. |
| | A13 EDGE CARD | A13 P1 - 48 | | A19 J13 - 48 | | −5V | | |
| | A13 EDGE CARD | A13 P1 - 49 | | A19 J13 - 49 | | +33V | | |
| | A13 EDGE CARD | A13 P1 - 50 | | A19 J13 - 50 | | +33V | | |
| | A13 EDGE CARD | A13 P1 - 51 | | A19 J13 - 51 | | +12V | | |
| | A13 EDGE CARD | A13 P1 - 52 | | A19 J13 - 52 | | +12V | | |
| | A13 EDGE CARD | A13 P1 - 53 | | A19 J13 - 53 | | −12V | | |
| | A13 EDGE CARD | A13 P1 - 54 | | A19 J13 - 54 | | −12V | | |
| | A13 EDGE CARD | A13 P1 - 55 | | A19 J13 - 55 | | INT FREQ CNTR | | |
| | A13 EDGE CARD | A13 P1 - 56 | | A19 J13 - 56 | | $V_{PP}$ | | |
| | A13 EDGE CARD | A13 P1 - 57 | | A19 J13 - 57 | | $\overline{PGM}$ | | |
| | A13 EDGE CARD | A13 P1 - 58 | | A19 J13 - 58 | | $\overline{NMI}$ | | |
| | A13 EDGE CARD | A13 P1 - 59 | | A19 J13 - 59 | | $\overline{ROM\text{-}P3}$ | | |
| | A13 EDGE CARD | A13 P1 - 60 | | A19 J13 - 60 | | $\overline{ROM\text{-}P1}$ | | |
| | A13 EDGE CARD | A13 P1 - 61 | | A19 J13 - 61 | | $\overline{ROM\text{-}P0}$ | | |
| | A13 EDGE CARD | A13 P1 - 62 | | A19 J13 - 62 | | $\overline{ROM\text{-}P14}$ | | |
| | A13 EDGE CARD | A13 P1 - 63 | | A19 J13 - 63 | | $\overline{ROM\text{-}P13}$ | | |
| | A13 EDGE CARD | A13 P1 - 64 | | A19 J13 - 64 | | $\overline{FIRQ}$ | | |
| | A13 EDGE CARD | A13 P1 - 65 | | A19 J13 - 65 | | $\overline{ROM\text{-}P12}$ | | |
| | A13 EDGE CARD | A13 P1 - 66 | | A19 J13 - 66 | | $\overline{XRAM}$ | | |
| | A13 EDGE CARD | A13 P1 - 67 | | A19 J13 - 67 | | $\overline{ROM\text{-}P11}$ | | |
| | A13 EDGE CARD | A13 P1 - 68 | | A19 J13 - 68 | | $\overline{ROM\text{-}P9}$ | | |
| | A13 EDGE CARD | A13 P1 - 69 | | A19 J13 - 69 | | $\overline{RESET}$ | | |
| | A13 EDGE CARD | A13 P1 - 70 | | A19 J13 - 70 | | $\overline{IRQ}$ | | |
| | A13 EDGE CARD | A13 P1 - 71 | | A19 J13 - 71 | | A1 | | |
| | A13 EDGE CARD | A13 P1 - 72 | | A19 J13 - 72 | | A0 | | |
| | A13 EDGE CARD | A13 P1 - 73 | | A19 J13 - 73 | | A3 | | |
| | A13 EDGE CARD | A13 P1 - 74 | | A19 J13 - 74 | | A2 | | |
| | A13 EDGE CARD | A13 P1 - 75 | | A19 J13 - 75 | | A5 | | |
| | A13 EDGE CARD | A13 P1 - 76 | | A19 J13 - 76 | | A4 | | |
| | A13 EDGE CARD | A13 P1 - 77 | | A19 J13 - 77 | | A7 | | |
| | A13 EDGE CARD | A13 P1 - 78 | | A19 J13 - 78 | | A6 | | |
| | A13 EDGE CARD | A13 P1 - 79 | | A19 J13 - 79 | | A9 | | |
| | A13 EDGE CARD | A13 P1 - 80 | | A19 J13 - 80 | | A8 | | |
| | A13 EDGE CARD | A13 P1 - 81 | | A19 J13 - 81 | | A11 | | |
| | A13 EDGE CARD | A13 P1 - 82 | | A19 J13 - 82 | | A10 | | |
| | A13 EDGE CARD | A13 P1 - 83 | | A19 J13 - 83 | | A13 | | |
| | A13 EDGE CARD | A13 P1 - 84 | | A19 J13 - 84 | | A12 | | |
| | A13 EDGE CARD | A13 P1 - 85 | | A19 J13 - 85 | | A15 | | |
| | A13 EDGE CARD | A13 P1 - 86 | | A19 J13 - 86 | | A14 | | |
| | A13 EDGE CARD | A13 P1 - 87 | | A19 J13 - 87 | | $\overline{I/O\ EN}$ | | |
| | A13 EDGE CARD | A13 P1 - 88 | | A19 J13 - 88 | | E | | |
| | A13 EDGE CARD | A13 P1 - 89 | | A19 J13 - 89 | | Q | | |
| | A13 EDGE CARD | A13 P1 - 90 | | A19 J13 - 90 | | R/$\overline{W}$ | | |
| | A13 EDGE CARD | A13 P1 - 91 | | A19 J13 - 91 | | D1 | | |
| | A13 EDGE CARD | A13 P1 - 92 | | A19 J13 - 92 | | D0 | | |
| | A13 EDGE CARD | A13 P1 - 93 | | A19 J13 - 93 | | D3 | | |
| | A13 EDGE CARD | A13 P1 - 94 | | A19 J13 - 94 | | D2 | | |

Table 5-2m. System Wirelist – IEEE Interface Option Board (A13) (Cont)

| 1 | 2 | 3 | 4 | 5 | 6 | 7 | 8 | 9 |
|---|---|---|---|---|---|---|---|---|
| WIRE NO. | COLOR SIZE AWG | WIRE RUNS FROM | NOTE OR VIEW | TO | NOTE OR VIEW | FUNCTION ROUTING REMARKS | APPROX LENGTH (INCHES) | USE FIND NO. |
| | A13 EDGE CARD | A13 P1 - 95 | | A19 J13 - 95 | | D5 | | |
| | A13 EDGE CARD | A13 P1 - 96 | | A19 J13 - 96 | | D4 | | |
| | A13 EDGE CARD | A13 P1 - 97 | | A19 J13 - 97 | | D7 | | |
| | A13 EDGE CARD | A13 P1 - 98 | | A19 J13 - 98 | | D6 | | |
| | A13 EDGE CARD | A13 P1 - 99 | | A19 J13 - 99 | | GND | | |
| | A13 EDGE CARD | A13 P1 - 100 | | A19 J13 - 100 | | GND | | |

Table 5-2n. System Wirelist–Processor Board (A14)

| 1 | 2 | 3 | 4 | 5 | 6 | 7 | 8 | 9 |
|---|---|---|---|---|---|---|---|---|
| WIRE NO. | COLOR SIZE AWG | WIRE RUNS FROM | NOTE OR VIEW | TO | NOTE OR VIEW | FUNCTION ROUTING REMARKS | APPROX LENGTH (INCHES) | USE FIND NO. |
| | A14 EDGE CARD | A14 P1 - 1 | | A19 J14 - 1 | | GND | | |
| | A14 EDGE CARD | A14 P1 - 2 | | A19 J14 - 2 | | GND | | |
| | A14 EDGE CARD | A14 P1 - 3 | | A19 J14 - 3 | | COLUMN 0 | | |
| | A14 EDGE CARD | A14 P1 - 4 | | A19 J14 - 4 | | COLUMN 1 | | |
| | A14 EDGE CARD | A14 P1 - 5 | | A19 J14 - 5 | | COLUMN 2 | | |
| | A14 EDGE CARD | A14 P1 - 6 | | A19 J14 - 6 | | COLUMN 3 | | |
| | A14 EDGE CARD | A14 P1 - 7 | | A19 J14 - 7 | | ROW 0 | | |
| | A14 EDGE CARD | A14 P1 - 8 | | A19 J14 - 8 | | ROW 1 | | |
| | A14 EDGE CARD | A14 P1 - 9 | | A19 J14 - 9 | | ROW 2 | | |
| | A14 EDGE CARD | A14 P1 - 10 | | A19 J14 - 10 | | ROW 3 | | |
| | A14 EDGE CARD | A14 P1 - 11 | | A19 J14 - 11 | | CB2 | | |
| | A14 EDGE CARD | A14 P1 - 12 | | A19 J14 - 12 | | OPT B DET | | |
| | A14 EDGE CARD | A14 P1 - 13 | | A19 J14 - 13 | | KEY ROW 4 | | |
| | A14 EDGE CARD | A14 P1 - 14 | | A19 J14 - 14 | | OPT A DET | | |
| | A14 EDGE CARD | A14 P1 - 15 | | A19 J14 - 15 | | OPTO CCW | | |
| | A14 EDGE CARD | A14 P1 - 16 | | A19 J14 - 16 | | VERT FROM RANGE SW | | |
| | A14 EDGE CARD | A14 P1 - 17 | | A19 J14 - 17 | | $\overline{\text{ROM-P15}}$ | | |
| | A14 EDGE CARD | A14 P1 - 18 | | A19 J14 - 18 | | $\overline{\text{AF BUS EN 1}}$ | | |
| | A14 EDGE CARD | A14 P1 - 19 | | A19 J14 - 19 | | VERT CHAR SYNC | | |
| | A14 EDGE CARD | A14 P1 - 20 | | A19 J14 - 20 | | HORIZ CHAR SYNC | | |
| | A14 EDGE CARD | A14 P1 - 21 | | A19 J14 - 21 | | CHAR GEN Z-AXIS | | |
| | A14 EDGE CARD | A14 P1 - 22 | | A19 J14 - 22 | | $\overline{\text{CHAR GEN RST}}$ | | |
| | A14 EDGE CARD | A14 P1 - 23 | | A19 J14 - 23 | | $\overline{\text{ROM-P7}}$ | | |
| | A14 EDGE CARD | A14 P1 - 24 | | A19 J14 - 24 | | $\overline{\text{ROM-P6}}$ | | |
| | A14 EDGE CARD | A14 P1 - 25 | | A19 J14 - 25 | | NC | | |
| | A14 EDGE CARD | A14 P1 - 26 | | A19 J14 - 26 | | $\overline{\text{ROM-P10}}$ | | |
| | A14 EDGE CARD | A14 P1 - 27 | | A19 J14 - 27 | | CB1 | | |
| | A14 EDGE CARD | A14 P1 - 28 | | A19 J14 - 28 | | CA2 | | |
| | A14 EDGE CARD | A14 P1 - 29 | | A19 J14 - 29 | | BINARY MOD | | |
| | A14 EDGE CARD | A14 P1 - 30 | | A19 J14 - 30 | | NC | | |

Table 5-2n. System Wirelist–Processor Board (A14) (Cont)

| 1 | 2 | 3 | 4 | 5 | 6 | 7 | 8 | 9 |
|---|---|---|---|---|---|---|---|---|
| WIRE NO. | COLOR SIZE AWG | WIRE RUNS FROM | NOTE OR VIEW | TO | NOTE OR VIEW | FUNCTION ROUTING REMARKS | APPROX LENGTH (INCHES) | USE FIND NO. |
| | A14 EDGE CARD | A14 P1 - 31 | | A19 J14 - 31 | | EXT MOD INPUT | | |
| | A14 EDGE CARD | A14 P1 - 32 | | A19 J14 - 32 | | $\overline{\text{ROM-P5}}$ | | |
| | A14 EDGE CARD | A14 P1 - 33 | | A19 J14 - 33 | | $\overline{\text{ROM-P8}}$ | | |
| | A14 EDGE CARD | A14 P1 - 34 | | A19 J14 - 34 | | NC | | |
| | A14 EDGE CARD | A14 P1 - 35 | | A19 J14 - 35 | | NC | | |
| | A14 EDGE CARD | A14 P1 - 36 | | A19 J14 - 36 | | NC | | |
| | A14 EDGE CARD | A14 P1 - 37 | | A19 J14 - 37 | | NC | | |
| | A14 EDGE CARD | A14 P1 - 38 | | A19 J14 - 38 | | NC | | |
| | A14 EDGE CARD | A14 P1 - 39 | | A19 J14 - 39 | | NC | | |
| | A14 EDGE CARD | A14 P1 - 40 | | A19 J14 - 40 | | NC | | |
| | A14 EDGE CARD | A14 P1 - 41 | | A19 J14 - 41 | | NC | | |
| | A14 EDGE CARD | A14 P1 - 42 | | A19 J14 - 42 | | NC | | |
| | A14 EDGE CARD | A14 P1 - 43 | | A19 J14 - 43 | | NC | | |
| | A14 EDGE CARD | A14 P1 - 44 | | A19 J14 - 44 | | $\overline{\text{LINE 1}}$ | | |
| | A14 EDGE CARD | A14 P1 - 45 | | A19 J14 - 45 | | +5V | | |
| | A14 EDGE CARD | A14 P1 - 46 | | A19 J14 - 46 | | +5V | | |
| | A14 EDGE CARD | A14 P1 - 47 | | A19 J14 - 47 | | −5V | | |
| | A14 EDGE CARD | A14 P1 - 48 | | A19 J14 - 48 | | −5V | | |
| | A14 EDGE CARD | A14 P1 - 49 | | A19 J14 - 49 | | NC | | |
| | A14 EDGE CARD | A14 P1 - 50 | | A19 J14 - 50 | | NC | | |
| | A14 EDGE CARD | A14 P1 - 51 | | A19 J14 - 51 | | NC | | |
| | A14 EDGE CARD | A14 P1 - 52 | | A19 J14 - 52 | | NC | | |
| | A14 EDGE CARD | A14 P1 - 53 | | A19 J14 - 53 | | NC | | |
| | A14 EDGE CARD | A14 P1 - 54 | | A19 J14 - 54 | | NC | | |
| | A14 EDGE CARD | A14 P1 - 55 | | A19 J14 - 55 | | $\overline{\text{CL CTL}}$ | | |
| | A14 EDGE CARD | A14 P1 - 56 | | A19 J14 - 56 | | $V_{PP}$ | | |
| | A14 EDGE CARD | A14 P1 - 57 | | A19 J14 - 57 | | $\overline{\text{PGM}}$ | | |
| | A14 EDGE CARD | A14 P1 - 58 | | A19 J14 - 58 | | $\overline{\text{NMI}}$ | | |
| | A14 EDGE CARD | A14 P1 - 59 | | A19 J14 - 59 | | $\overline{\text{ROM-P3}}$ | | |
| | A14 EDGE CARD | A14 P1 - 60 | | A19 J14 - 60 | | $\overline{\text{ROM-P1}}$ | | |
| | A14 EDGE CARD | A14 P1 - 61 | | A19 J14 - 61 | | $\overline{\text{ROM-PQ}}$ | | |
| | A14 EDGE CARD | A14 P1 - 62 | | A19 J14 - 62 | | $\overline{\text{ROM-P14}}$ | | |
| | A14 EDGE CARD | A14 P1 - 63 | | A19 J14 - 63 | | $\overline{\text{ROM-P13}}$ | | |
| | A14 EDGE CARD | A14 P1 - 64 | | A19 J14 - 64 | | $\overline{\text{FIRQ}}$ | | |
| | A14 EDGE CARD | A14 P1 - 65 | | A19 J14 - 65 | | $\overline{\text{ROM-P12}}$ | | |
| | A14 EDGE CARD | A14 P1 - 66 | | A19 J14 - 66 | | $\overline{\text{XRAM}}$ | | |
| | A14 EDGE CARD | A14 P1 - 67 | | A19 J14 - 67 | | $\overline{\text{ROM-P11}}$ | | |
| | A14 EDGE CARD | A14 P1 - 68 | | A19 J14 - 68 | | $\overline{\text{ROM-P9}}$ | | |
| | A14 EDGE CARD | A14 P1 - 69 | | A19 J14 - 69 | | $\overline{\text{RESET}}$ | | |
| | A14 EDGE CARD | A14 P1 - 70 | | A19 J14 - 70 | | $\overline{\text{IRQ}}$ | | |
| | A14 EDGE CARD | A14 P1 - 71 | | A19 J14 - 71 | | A1 | | |
| | A14 EDGE CARD | A14 P1 - 72 | | A19 J14 - 72 | | A0 | | |
| | A14 EDGE CARD | A14 P1 - 73 | | A19 J14 - 73 | | A3 | | |
| | A14 EDGE CARD | A14 P1 - 74 | | A19 J14 - 74 | | A2 | | |
| | A14 EDGE CARD | A14 P1 - 75 | | A19 J14 - 75 | | A5 | | |
| | A14 EDGE CARD | A14 P1 - 76 | | A19 J14 - 76 | | A4 | | |
| | A14 EDGE CARD | A14 P1 - 77 | | A19 J14 - 77 | | A7 | | |

Table 5-2n. System Wirelist–Processor Board (A14) (Cont)

| 1 | 2 | 3 | 4 | 5 | 6 | 7 | 8 | 9 |
|---|---|---|---|---|---|---|---|---|
| WIRE NO. | COLOR SIZE AWG | WIRE RUNS FROM | NOTE OR VIEW | TO | NOTE OR VIEW | FUNCTION ROUTING REMARKS | APPROX LENGTH (INCHES) | USE FIND NO. |
| | A14 EDGE CARD | A14 P1 - 78 | | A19 J14 - 78 | | A6 | | |
| | A14 EDGE CARD | A14 P1 - 79 | | A19 J14 - 79 | | A9 | | |
| | A14 EDGE CARD | A14 P1 - 80 | | A19 J14 - 80 | | A8 | | |
| | A14 EDGE CARD | A14 P1 - 81 | | A19 J14 - 81 | | A11 | | |
| | A14 EDGE CARD | A14 P1 - 82 | | A19 J14 - 82 | | A10 | | |
| | A14 EDGE CARD | A14 P1 - 83 | | A19 J14 - 83 | | A13 | | |
| | A14 EDGE CARD | A14 P1 - 84 | | A19 J14 - 84 | | A12 | | |
| | A14 EDGE CARD | A14 P1 - 85 | | A19 J14 - 85 | | A15 | | |
| | A14 EDGE CARD | A14 P1 - 86 | | A19 J14 - 86 | | A14 | | |
| | A14 EDGE CARD | A14 P1 - 87 | | A19 J14 - 87 | | $\overline{I/O\ EN}$ | | |
| | A14 EDGE CARD | A14 P1 - 88 | | A19 J14 - 88 | | E | | |
| | A14 EDGE CARD | A14 P1 - 89 | | A19 J14 - 89 | | Q | | |
| | A14 EDGE CARD | A14 P1 - 90 | | A19 J14 - 90 | | $R/\overline{W}$ | | |
| | A14 EDGE CARD | A14 P1 - 91 | | A19 J14 - 91 | | D1 | | |
| | A14 EDGE CARD | A14 P1 - 92 | | A19 J14 - 92 | | D0 | | |
| | A14 EDGE CARD | A14 P1 - 93 | | A19 J14 - 93 | | D3 | | |
| | A14 EDGE CARD | A14 P1 - 94 | | A19 J14 - 94 | | D2 | | |
| | A14 EDGE CARD | A14 P1 - 95 | | A19 J14 - 95 | | D5 | | |
| | A14 EDGE CARD | A14 P1 - 96 | | A19 J14 - 96 | | D4 | | |
| | A14 EDGE CARD | A14 P1 - 97 | | A19 J14 - 97 | | D7 | | |
| | A14 EDGE CARD | A14 P1 - 98 | | A19 J14 - 98 | | D6 | | |
| | A14 EDGE CARD | A14 P1 - 99 | | A19 J14 - 99 | | GND | | |
| | A14 EDGE CARD | A14 P1 - 100 | | A19 J14 - 100 | | GND | | |

Table 5-2o. System Wirelist – Front-Panel Interface Board (A15)

| 1 | 2 | 3 | 4 | 5 | 6 | 7 | 8 | 9 |
|---|---|---|---|---|---|---|---|---|
| WIRE NO. | COLOR SIZE AWG | WIRE RUNS FROM | NOTE OR VIEW | TO | NOTE OR VIEW | FUNCTION ROUTING REMARKS | APPROX LENGTH (INCHES) | USE FIND NO. |
| | A15 EDGE CARD | A15 P1 - 1 | | A19 J15 - 1 | | EXT INPUT | | |
| | A15 EDGE CARD | A15 P1 - 2 | | A19 J15 - 2 | | GND | | |
| | A15 EDGE CARD | A15 P1 - 3 | | A19 J15 - 3 | | NC | | |
| | A15 EDGE CARD | A15 P1 - 4 | | A19 J15 - 4 | | VERT POS | | |
| | A15 EDGE CARD | A15 P1 - 5 | | A19 J15 - 5 | | VERT GAIN | | |
| | A15 EDGE CARD | A15 P1 - 6 | | A19 J15 - 6 | | VERT GAIN RTN | | |
| | A15 EDGE CARD | A15 P1 - 7 | | A19 J15 - 7 | | RF ATTEN 130 dB | | |
| | A15 EDGE CARD | A15 P1 - 8 | | A19 J15 - 8 | | RF ATTEN 120 dB | | |
| | A15 EDGE CARD | A15 P1 - 9 | | A19 J15 - 9 | | RF ATTEN 110 dB | | |
| | A15 EDGE CARD | A15 P1 - 10 | | A19 J15 - 10 | | RF ATTEN 100 dB | | |

Table 5-2o. System Wirelist – Front-Panel Interface Board (A15) (Cont)

| 1 | 2 | 3 | 4 | 5 | 6 | 7 | 8 | 9 |
|---|---|---|---|---|---|---|---|---|
| WIRE NO. | COLOR SIZE AWG | WIRE RUNS FROM | NOTE OR VIEW | TO | NOTE OR VIEW | FUNCTION ROUTING REMARKS | APPROX LENGTH (INCHES) | USE FIND NO. |
| | A15 EDGE CARD | A15 P1 - 11 | | A19 J15 - 11 | | RF ATTEN 90 dB | | |
| | A15 EDGE CARD | A15 P1 - 12 | | A19 J15 - 12 | | RF ATTEN 80 dB | | |
| | A15 EDGE CARD | A15 P1 - 13 | | A19 J15 - 13 | | RF ATTEN 70 dB | | |
| | A15 EDGE CARD | A15 P1 - 14 | | A19 J15 - 14 | | RF ATTEN 60 dB | | |
| | A15 EDGE CARD | A15 P1 - 15 | | A19 J15 - 15 | | RF ATTEN 50 dB | | |
| | A15 EDGE CARD | A15 P1 - 16 | | A19 J15 - 16 | | RF ATTEN 40 dB | | |
| | A15 EDGE CARD | A15 P1 - 17 | | A19 J15 - 17 | | RF ATTEN 30 dB | | |
| | A15 EDGE CARD | A15 P1 - 18 | | A19 J15 - 18 | | RF ATTEN 20 dB | | |
| | A15 EDGE CARD | A15 P1 - 19 | | A19 J15 - 19 | | RF ATTEN 10 dB | | |
| | A15 EDGE CARD | A15 P1 - 20 | | A19 J15 - 20 | | VERT FROM RNG SW | | |
| | A15 EDGE CARD | A15 P1 - 21 | | A19 J15 - 21 | | RF ATTEN 0 dB | | |
| | A15 EDGE CARD | A15 P1 - 22 | | A19 J15 - 22 | | DVM FROM RNG SW | | |
| | A15 EDGE CARD | A15 P1 - 23 | | A19 J15 - 23 | | NC | | |
| | A15 EDGE CARD | A15 P1 - 24 | | A19 J15 - 24 | | INT SCOPE TO RNG | | |
| | A15 EDGE CARD | A15 P1 - 25 | | A19 J15 - 25 | | 10V/DIV RNG SEL | | |
| | A15 EDGE CARD | A15 P1 - 26 | | A19 J15 - 26 | | 1V/DIV RNG SEL | | |
| | A15 EDGE CARD | A15 P1 - 27 | | A19 J15 - 27 | | 0.1V/DIV RNG SEL | | |
| | A15 EDGE CARD | A15 P1 - 28 | | A19 J15 - 28 | | 0.01/DIV RNG SEL | | |
| | A15 EDGE CARD | A15 P1 - 29 | | A19 J15 - 29 | | OFFSET ON/OFF | | |
| | A15 EDGE CARD | A15 P1 - 30 | | A19 J15 - 30 | | $\overline{\text{IF OVERLOAD}}$ | | |
| | A15 EDGE CARD | A15 P1 - 31 | | A19 J15 - 31 | | WB/NB | | |
| | A15 EDGE CARD | A15 P1 - 32 | | A19 J15 - 32 | | SIGNAL PRESENT | | |
| | A15 EDGE CARD | A15 P1 - 33 | | A19 J15 - 33 | | $\overline{\text{ANT SEL}}$ | | |
| | A15 EDGE CARD | A15 P1 - 34 | | A19 J15 - 34 | | EXT FREQ CNTR | | |
| | A15 EDGE CARD | A15 P1 - 35 | | A19 J15 - 35 | | SPARE BIT | | |
| | A15 EDGE CARD | A15 P1 - 36 | | A19 J15 - 36 | | $\overline{\text{EXT FREQ CNTR}}$ | | |
| | A15 EDGE CARD | A15 P1 - 37 | | A19 J15 - 37 | | RF OVER TEMP | | |
| | A15 EDGE CARD | A15 P1 - 38 | | A19 J15 - 38 | | WB SIG PRES | | |
| | A15 EDGE CARD | A15 P1 - 39 | | A19 J15 - 39 | | $\overline{\text{FIRQ}}$ | | |
| | A15 EDGE CARD | A15 P1 - 40 | | A19 J15 - 40 | | OPTO CCW | | |
| | A15 EDGE CARD | A15 P1 - 41 | | A19 J15 - 41 | | NC | | |
| | A15 EDGE CARD | A15 P1 - 42 | | A19 J15 - 42 | | OPTICAL ENC B | | |
| | A15 EDGE CARD | A15 P1 - 43 | | A19 J15 - 43 | | NC | | |
| | A15 EDGE CARD | A15 P1 - 44 | | A19 J15 - 44 | | OPTICAL ENC A | | |
| | A15 EDGE CARD | A15 P1 - 45 | | A19 J15 - 45 | | +5V | | |
| | A15 EDGE CARD | A15 P1 - 46 | | A19 J15 - 46 | | +5V | | |
| | A15 EDGE CARD | A15 P1 - 47 | | A19 J15 - 47 | | NC | | |
| | A15 EDGE CARD | A15 P1 - 48 | | A19 J15 - 48 | | NC | | |
| | A15 EDGE CARD | A15 P1 - 49 | | A19 J15 - 49 | | HORIZ INPUT | | |
| | A15 EDGE CARD | A15 P1 - 50 | | A19 J15 - 50 | | HORIZ TO SCOPE AMP | | |
| | A15 EDGE CARD | A15 P1 - 51 | | A19 J15 - 51 | | +12V | | |
| | A15 EDGE CARD | A15 P1 - 52 | | A19 J15 - 52 | | +12V | | |
| | A15 EDGE CARD | A15 P1 - 53 | | A19 J15 - 53 | | −12V | | |
| | A15 EDGE CARD | A15 P1 - 54 | | A19 J15 - 54 | | −12V | | |
| | A15 EDGE CARD | A15 P1 - 55 | | A19 J15 - 55 | | EXT HORIZ SEL | | |
| | A15 EDGE CARD | A15 P1 - 56 | | A19 J15 - 56 | | 100 MS/DIV SWP SEL | | |
| | A15 EDGE CARD | A15 P1 - 57 | | A19 J15 - 57 | | 10 MS/DIV SWP SEL | | |

Table 5-2o. System Wirelist–Front-Panel Interface Board (A15) (Cont)

| 1 | 2 | 3 | 4 | 5 | 6 | 7 | 8 | 9 |
|---|---|---|---|---|---|---|---|---|
| WIRE NO. | COLOR SIZE AWG | WIRE RUNS FROM | NOTE OR VIEW | TO | NOTE OR VIEW | FUNCTION ROUTING REMARKS | APPROX LENGTH (INCHES) | USE FIND NO. |
| | A15 EDGE CARD | A15 P1 - 58 | | A19 J15 - 58 | | 1 MS/DIV SWP SEL | | |
| | A15 EDGE CARD | A15 P1 - 59 | | A19 J15 - 59 | | 100 μS/DIV SWP SEL | | |
| | A15 EDGE CARD | A15 P1 - 60 | | A19 J15 - 60 | | 10 μS/DIV SWP SEL | | |
| | A15 EDGE CARD | A15 P1 - 61 | | A19 J15 - 61 | | 1 μS/DIV SWP SEL | | |
| | A15 EDGE CARD | A15 P1 - 62 | | A19 J15 - 62 | | AF ADD BUS 0 | | |
| | A15 EDGE CARD | A15 P1 - 63 | | A19 J15 - 63 | | AF ADD BUS 1 | | |
| | A15 EDGE CARD | A15 P1 - 64 | | A19 J15 - 64 | | AF ADD BUS 2 | | |
| | A15 EDGE CARD | A15 P1 - 65 | | A19 J15 - 65 | | AF ADD BUS 3 | | |
| | A15 EDGE CARD | A15 P1 - 66 | | A19 J15 - 66 | | AF DATA BUS 3 | | |
| | A15 EDGE CARD | A15 P1 - 67 | | A19 J15 - 67 | | AF DATA BUS 2 | | |
| | A15 EDGE CARD | A15 P1 - 68 | | A19 J15 - 68 | | AF DATA BUS 1 | | |
| | A15 EDGE CARD | A15 P1 - 69 | | A19 J15 - 69 | | $\overline{\text{AF BUS EN 2}}$ | | |
| | A15 EDGE CARD | A15 P1 - 70 | | A19 J15 - 70 | | AF DATA BUS 0 | | |
| | A15 EDGE CARD | A15 P1 - 71 | | A19 J15 - 71 | | +8V OUT | | |
| | A15 EDGE CARD | A15 P1 - 72 | | A19 J15 - 72 | | −8V OUT | | |
| | A15 EDGE CARD | A15 P1 - 73 | | A19 J15 - 73 | | IMAGE HI/LO | | |
| | A15 EDGE CARD | A15 P1 - 74 | | A19 J15 - 74 | | ATTN X 0.01 | | |
| | A15 EDGE CARD | A15 P1 - 75 | | A19 J15 - 75 | | ATTN X 0.001 | | |
| | A15 EDGE CARD | A15 P1 - 76 | | A19 J15 - 76 | | OFFSET ATTEN EN | | |
| | A15 EDGE CARD | A15 P1 - 77 | | A19 J15 - 77 | | DC SELECT | | |
| | A15 EDGE CARD | A15 P1 - 78 | | A19 J15 - 78 | | MON + DSB/GEN | | |
| | A15 EDGE CARD | A15 P1 - 79 | | A19 J15 - 79 | | ATTN X 0.1 | | |
| | A15 EDGE CARD | A15 P1 - 80 | | A19 J15 - 80 | | EXT INPUT SEL | | |
| | A15 EDGE CARD | A15 P1 - 81 | | A19 J15 - 81 | | MON/GEN | | |
| | A15 EDGE CARD | A15 P1 - 82 | | A19 J15 - 82 | | ATTN X 1.0 | | |
| | A15 EDGE CARD | A15 P1 - 83 | | A19 J15 - 83 | | COLUMN 1 | | |
| | A15 EDGE CARD | A15 P1 - 84 | | A19 J15 - 84 | | COLUMN 0 | | |
| | A15 EDGE CARD | A15 P1 - 85 | | A19 J15 - 85 | | ROW 1 | | |
| | A15 EDGE CARD | A15 P1 - 86 | | A19 J15 - 86 | | ROW 2 | | |
| | A15 EDGE CARD | A15 P1 - 87 | | A19 J15 - 87 | | ROW 3 | | |
| | A15 EDGE CARD | A15 P1 - 88 | | A19 J15 - 88 | | COLUMN 3 | | |
| | A15 EDGE CARD | A15 P1 - 89 | | A19 J15 - 89 | | COLUMN 2 | | |
| | A15 EDGE CARD | A15 P1 - 90 | | A19 J15 - 90 | | KEY ROW 4 | | |
| | A15 EDGE CARD | A15 P1 - 91 | | A19 J15 - 91 | | $\overline{\text{POWER OFF}}$ | | |
| | A15 EDGE CARD | A15 P1 - 92 | | A19 J15 - 92 | | ROW 0 | | |
| | A15 EDGE CARD | A15 P1 - 93 | | A19 J15 - 93 | | OVEN LED CATH | | |
| | A15 EDGE CARD | A15 P1 - 94 | | A19 J15 - 94 | | $\overline{\text{POWER ON}}$ | | |
| | A15 EDGE CARD | A15 P1 - 95 | | A19 J15 - 95 | | DC LED CATH | | |
| | A15 EDGE CARD | A15 P1 - 96 | | A19 J15 - 96 | | OVEN LED ANODE | | |
| | A15 EDGE CARD | A15 P1 - 97 | | A19 J15 - 97 | | AC LED | | |
| | A15 EDGE CARD | A15 P1 - 98 | | A19 J15 - 98 | | DC LED | | |
| | A15 EDGE CARD | A15 P1 - 99 | | A19 J15 - 99 | | GND | | |
| | A15 EDGE CARD | A15 P1 - 100 | | A19 J15 - 100 | | GND | | |
| AF DATA | CABLE ASSEM, RIBBON | A15 J1 - 1 | | A18A1 J1 - 1 | | AF DATA BUS 0 | | 055 |
| AF DATA | CABLE ASSEM, RIBBON | A15 J1 - 2 | | A18A1 J1 - 2 | | AF DATA BUS 1 | | 055 |
| AF DATA | CABLE ASSEM, RIBBON | A15 J1 - 3 | | A18A1 J1 - 3 | | AF DATA BUS 3 | | 055 |
| AF DATA | CABLE ASSEM, RIBBON | A15 J1 - 4 | | A18A1 J1 - 4 | | AF DATA BUS 2 | | 055 |

Table 5-2o. System Wirelist – Front-Panel Interface Board (A15) (Cont)

| 1 | 2 | 3 | 4 | 5 | 6 | 7 | 8 | 9 |
|---|---|---|---|---|---|---|---|---|
| WIRE NO. | COLOR SIZE AWG | WIRE RUNS FROM | NOTE OR VIEW | TO | NOTE OR VIEW | FUNCTION ROUTING REMARKS | APPROX LENGTH (INCHES) | USE FIND NO. |
| AF DATA | CABLE ASSEM, RIBBON | A15 J1 - 5 | | A18A1 J1 - 5 | | $\overline{\text{LS 1}}$ | | 055 |
| AF DATA | CABLE ASSEM, RIBBON | A15 J1 - 6 | | A18A1 J1 - 6 | | $\overline{\text{LS 2}}$ | | 055 |
| AF DATA | CABLE ASSEM, RIBBON | A15 J1 - 7 | | A18A1 J1 - 7 | | OVEN LED ANODE | | 055 |
| AF DATA | CABLE ASSEM, RIBBON | A15 J1 - 8 | | A18A1 J1 - 8 | | OVEN LED CATHODE | | 055 |
| AF DATA | CABLE ASSEM, RIBBON | A15 J1 - 9 | | A18A1 J1 - 9 | | DC LED CATHODE | | 055 |
| AF DATA | CABLE ASSEM, RIBBON | A15 J1 - 10 | | A18A1 J1 - 10 | | DC LED ANODE | | 055 |
| AF DATA | CABLE ASSEM, RIBBON | A15 J1 - 11 | | A18A1 J1 - 11 | | AC LED | | 055 |
| AF DATA | CABLE ASSEM, RIBBON | A15 J1 - 12 | | A18A1 J1 - 12 | | $\overline{\text{LS 0}}$ | | 055 |
| AF DATA | CABLE ASSEM, RIBBON | A15 J1 - 13 | | A18A1 J1 - 13 | | +5V | | 055 |
| AF DATA | CABLE ASSEM, RIBBON | A15 J1 - 14 | | A18A1 J1 - 14 | | +5V | | 055 |
| AF DATA | CABLE ASSEM, RIBBON | A15 J1 - 15 | | A18A1 J1 - 15 | | GND | | 055 |
| AF DATA | CABLE ASSEM, RIBBON | A15 J1 - 16 | | A18A1 J1 - 16 | | GND | | 055 |
| KEY DATA | CABLE ASSEM, RIBBON | A15 J2 - 1 | | A18A1 J2 - 1 | | ROW 4 | | 055 |
| KEY DATA | CABLE ASSEM, RIBBON | A15 J2 - 2 | | A18A1 J2 - 2 | | ROW 3 | | 055 |
| KEY DATA | CABLE ASSEM, RIBBON | A15 J2 - 3 | | A18A1 J2 - 3 | | NC | | 055 |
| KEY DATA | CABLE ASSEM, RIBBON | A15 J2 - 4 | | A18A1 J2 - 4 | | COLUMN 3 | | 055 |
| KEY DATA | CABLE ASSEM, RIBBON | A15 J2 - 5 | | A18A1 J2 - 5 | | ROW 1 | | 055 |
| KEY DATA | CABLE ASSEM, RIBBON | A15 J2 - 6 | | A18A1 J2 - 6 | | ROW 2 | | 055 |
| KEY DATA | CABLE ASSEM, RIBBON | A15 J2 - 7 | | A18A1 J2 - 7 | | COLUMN 0 | | 055 |
| KEY DATA | CABLE ASSEM, RIBBON | A15 J2 - 8 | | A18A1 J2 - 8 | | COLUMN 1 | | 055 |
| KEY DATA | CABLE ASSEM, RIBBON | A15 J2 - 9 | | A18A1 J2 - 9 | | COLUMN 2 | | 055 |
| KEY DATA | CABLE ASSEM, RIBBON | A15 J2 - 10 | | A18A1 J2 - 10 | | ROW 0 | | 055 |
| KEY DATA | CABLE ASSEM, RIBBON | A15 J2 - 11 | | A18A1 J2 - 11 | | $\overline{\text{CSSG CONT}}$ | | 055 |
| KEY DATA | CABLE ASSEM, RIBBON | A15 J2 - 12 | | A18A1 J2 - 12 | | $\overline{\text{CSSG BURST}}$ | | 055 |
| KEY DATA | CABLE ASSEM, RIBBON | A15 J2 - 13 | | A18A1 J2 - 13 | | $\overline{\text{POWER OFF}}$ | | 055 |
| KEY DATA | CABLE ASSEM, RIBBON | A15 J2 - 14 | | A18A1 J2 - 14 | | $\overline{\text{POWER ON}}$ | | 055 |
| KEY DATA | CABLE ASSEM, RIBBON | A15 J2 - 15 | | A18A1 J2 - 15 | | MON/GEN | | 055 |
| KEY DATA | CABLE ASSEM, RIBBON | A15 J2 - 16 | | A18A1 J2 - 16 | | SPARE BIT | | 055 |

Table 5-2p. System Wirelist – Frequency-Standard Interface Board (A16)

| 1 | 2 | 3 | 4 | 5 | 6 | 7 | 8 | 9 |
|---|---|---|---|---|---|---|---|---|
| WIRE NO. | COLOR SIZE AWG | WIRE RUNS FROM | NOTE OR VIEW | TO | NOTE OR VIEW | FUNCTION ROUTING REMARKS | APPROX LENGTH (INCHES) | USE FIND NO. |
| A19008 | COAX ASSEMBLY | A16 J1 | | A19 E15 | | 10 MHZ REF | | 8 |
| W4 | RIBBON CABLE | A16 J2 - 1 | | A19 J16 - 1 | | FREQ STD SUPPLY | | W004 |
| W4 | RIBBON CABLE | A16 J2 - 2 | | A19 J16 - 2 | | GND | | W004 |
| W4 | RIBBON CABLE | A16 J2 - 3 | | A19 J16 - 3 | | NC | | W004 |
| W4 | RIBBON CABLE | A16 J2 - 4 | | A19 J16 - 4 | | NC | | W004 |
| W4 | RIBBON CABLE | A16 J2 - 5 | | A19 J16 - 5 | | OVEN LED ANODE | | W004 |
| W4 | RIBBON CABLE | A16 J2 - 6 | | A19 J16 - 6 | | OVEN LED CATHODE | | W004 |
| W4 | RIBBON CABLE | A16 J2 - 7 | | A19 J16 - 7 | | NC | | W004 |
| W4 | RIBBON CABLE | A16 J2 - 8 | | A19 J16 - 8 | | +12V | | W004 |
| A16W1 | COAX ASSEMBLY | A16 E18 | | J17 | | 10 MHZ IN/OUT | | W001 |
| 250 | WHT TEF 22 | A16 E1 | | TCXO - 1 | | 10 MHZ STD +9V | 2.75 | 6 |
| 250 | WHT TEF 22 | A16 E2 | | TCXO - 2 | | GND | 2.75 | 6 |
| 250 | WHT TEF 22 | A16 E3 | | TCXO - 3 | | 10 MHZ STD OUT | 2.75 | 6 |

Table 5-2q. System Wirelist – RF Input Module (A17)

| 1 | 2 | 3 | 4 | 5 | 6 | 7 | 8 | 9 |
|---|---|---|---|---|---|---|---|---|
| WIRE NO. | COLOR SIZE AWG | WIRE RUNS FROM | NOTE OR VIEW | TO | NOTE OR VIEW | FUNCTION ROUTING REMARKS | APPROX LENGTH (INCHES) | USE FIND NO. |
| RIBBON | A17 SYSTEM INTER | A17 P1 - 1 | | A19 J17 - 1 | | +5V | | W001 |
| RIBBON | A17 SYSTEM INTER | A17 P1 - 2 | | A19 J17 - 2 | | −5V | | W001 |
| RIBBON | A17 SYSTEM INTER | A17 P1 - 3 | | A19 J17 - 3 | | +33V | | W001 |
| RIBBON | A17 SYSTEM INTER | A17 P1 - 4 | | A19 J17 - 4 | | OFFSET ON/OFF | | W001 |
| RIBBON | A17 SYSTEM INTER | A17 P1 - 5 | | A19 J17 - 5 | | OFFSET ATTEN EN | | W001 |
| RIBBON | A17 SYSTEM INTER | A17 P1 - 6 | | A19 J17 - 6 | | DATA CLOCK | | W001 |
| RIBBON | A17 SYSTEM INTER | A17 P1 - 7 | | A19 J17 - 7 | | DATA LATCH | | W001 |
| RIBBON | A17 SYSTEM INTER | A17 P1 - 8 | | A19 J17 - 8 | | OFFSET DATA | | W001 |
| RIBBON | A17 SYSTEM INTER | A17 P1 - 9 | | A19 J17 - 9 | | ANT EN | | W001 |
| RIBBON | A17 SYSTEM INTER | A17 P1 - 10 | | A19 J17 - 10 | | RF INPUT PWR | | W001 |
| RIBBON | A17 SYSTEM INTER | A17 P1 - 11 | | A19 J17 - 11 | | GND | | W001 |
| RIBBON | A17 SYSTEM INTER | A17 P1 - 12 | | A19 J17 - 12 | | GND | | W001 |
| RIBBON | A17 SYSTEM INTER | A17 P1 - 13 | | A19 J17 - 13 | | 0.01 - 1 AGC | | W001 |
| RIBBON | A17 SYSTEM INTER | A17 P1 - 14 | | A19 J17 - 14 | | AM MOD + DC REF (0) | | W001 |
| RIBBON | A17 SYSTEM INTER | A17 P1 - 15 | | A19 J17 - 15 | | EXT FWD PWR | | W001 |
| RIBBON | A17 SYSTEM INTER | A17 P1 - 16 | | A19 J17 - 16 | | WB AMP LO/HI | | W001 |
| RIBBON | A17 SYSTEM INTER | A17 P1 - 17 | | A19 J17 - 17 | | EXT REF PWR | | W001 |
| RIBBON | A17 SYSTEM INTER | A17 P1 - 18 | | A19 J17 - 18 | | OFFSET MOD | | W001 |
| RIBBON | A17 SYSTEM INTER | A17 P1 - 19 | | A19 J17 - 19 | | DSBSC MOD | | W001 |
| RIBBON | A17 SYSTEM INTER | A17 P1 - 20 | | A19 J17 - 20 | | RF OVER TEMP | | W001 |
| RIBBON | A17 SYSTEM INTER | A17 P1 - 21 | | A19 J17 - 21 | | CARRIER + MOD LVL | | W001 |

Table 5-2q. System Wirelist – RF Input Module (A17) (Cont)

| 1 | 2 | 3 | 4 | 5 | 6 | 7 | 8 | 9 |
|---|---|---|---|---|---|---|---|---|
| WIRE NO. | COLOR SIZE AWG | WIRE RUNS FROM | NOTE OR VIEW | TO | NOTE OR VIEW | FUNCTION ROUTING REMARKS | APPROX LENGTH (INCHES) | USE FIND NO. |
| RIBBON | A17 SYSTEM INTER | A17 P1 - 22 | | A19 J17 - 22 | | MOD + DSB/GEN | | W001 |
| RIBBON | A17 SYSTEM INTER | A17 P1 - 23 | | A19 J17 - 23 | | +12V | | W001 |
| RIBBON | A17 SYSTEM INTER | A17 P1 - 24 | | A19 J17 - 24 | | −12V | | W001 |
| RIBBON | A17 SYSTEM INTER | A17 P1 - 25 | | A19 J17 - 25 | | NC | | W001 |
| RIBBON | A17 SYSTEM INTER | A17 P1 - 26 | | A19 J17 - 26 | | NC | | W001 |
| RIBBON | A17 SYSTEM INTER | A17 P1 - 27 | | A19 J17 - 27 | | NC | | W001 |
| RIBBON | A17 SYSTEM INTER | A17 P1 - 28 | | A19 J17 - 28 | | NC | | W001 |
| RIBBON | A17 SYSTEM INTER | A17 P1 - 29 | | A19 J17 - 29 | | NC | | W001 |
| RIBBON | A17 SYSTEM INTER | A17 P1 - 30 | | A19 J17 - 30 | | NC | | W001 |
| RIBBON | A17 SYSTEM INTER | A17 P1 - 31 | | A19 J17 - 31 | | NC | | W001 |
| RIBBON | A17 SYSTEM INTER | A17 P1 - 32 | | A19 J17 - 32 | | NC | | W001 |
| RIBBON | A17 SYSTEM INTER | A17 P1 - 33 | | A19 J17 - 33 | | NC | | W001 |
| RIBBON | A17 SYSTEM INTER | A17 P1 - 34 | | A19 J17 - 34 | | NC | | W001 |
| RIBBON | A17 SYSTEM INTER | A17 P1 - 35 | | A19 J17 - 35 | | NC | | W001 |
| RIBBON | A17 SYSTEM INTER | A17 P1 - 36 | | A19 J17 - 36 | | NC | | W001 |
| RIBBON | A17 SYSTEM INTER | A17 P1 - 37 | | A19 J17 - 37 | | NC | | W001 |
| RIBBON | A17 SYSTEM INTER | A17 P1 - 38 | | A19 J17 - 38 | | NC | | W001 |
| RIBBON | A17 SYSTEM INTER | A17 P1 - 39 | | A19 J17 - 39 | | GND | | W001 |
| RIBBON | A17 SYSTEM INTER | A17 P1 - 40 | | A19 J17 - 40 | | NC | | W001 |
| RIBBON | A17 SYSTEM INTER | A17 P1 - 41 | | A19 J17 - 41 | | NC | | W001 |
| RIBBON | A17 SYSTEM INTER | A17 P1 - 42 | | A19 J17 - 42 | | NC | | W001 |
| RIBBON | A17 SYSTEM INTER | A17 P1 - 43 | | A19 J17 - 43 | | NC | | W001 |
| RIBBON | A17 SYSTEM INTER | A17 P1 - 44 | | A19 J17 - 44 | | NC | | W001 |
| RIBBON | A17 SYSTEM INTER | A17 P1 - 45 | | A19 J17 - 45 | | NC | | W001 |
| RIBBON | A17 SYSTEM INTER | A17 P1 - 46 | | A19 J17 - 46 | | NC | | W001 |
| RIBBON | A17 SYSTEM INTER | A17 P1 - 47 | | A19 J17 - 47 | | NC | | W001 |
| RIBBON | A17 SYSTEM INTER | A17 P1 - 48 | | A19 J17 - 48 | | NC | | W001 |
| RIBBON | A17 SYSTEM INTER | A17 P1 - 49 | | A19 J17 - 49 | | NC | | W001 |
| RIBBON | A17 SYSTEM INTER | A17 P1 - 50 | | A19 J17 - 50 | | NC | | W001 |
| A17W1 | COAX ASSEMBLY | A17 J2 | | A17AT1 J1 | | STEP ATTEN IN/OUT 1 | | W001 |
| A17W2 | COAX ASSEMBLY | A17 J3 | | A17 J8 | | ANTENNA | | W002 |
| W3 | COAX ASSEMBLY | A17 J4 | | A9 J1 | | SYNTH RF | | W003 |
| W2 | COAX ASSEMBLY | A17 J5 | | A8 J1 | | 10.7 MHZ IF | | W002 |
| A17W4 | COAX ASSEMBLY | A17 J6 | | A17 J9 | | DUPLEX OUTPUT | | W004 |
| A17A2W1 | COAX ASSEMBLY | A17A2 J1 | | A17AT1 J2 | | STEP ATTEN IN/OUT 2 | | W001 |
| 520 | WHT TEF 22 | A17A4 - E1 | | S1 - 15 | | +5V | 16.15 | |
| | | A17A4 - E2 | | | | NC | | |
| 522 | WHT TEF 22 | A17A4 - E3 | | A17A3 - P5 | | +33V | 16.75 | |
| 523 | WHT TEF 22 | A17A4 - E4 | | A17 S2 - 2 | | OFFSET ON/OFF | 18.20 | |
| 524 | WHT TEF 22 | A17A4 - E5 | | A17A3 - P9 | | OFFSET ATTEN EN | 14.90 | |
| 525 | WHT TEF 22 | A17A4 - E6 | | A17A3 - P1 | | DATA CLOCK | 18.50 | |
| 526 | WHT TEF 22 | A17A4 - E7 | | A17A3 - P3 | | DATA LATCH | 17.25 | |
| 527 | WHT TEF 22 | A17A4 - E8 | | A17A3 - P2 | | OFFSET DATA | 17.10 | |
| 528 | WHT TEF 22 | A17A4 - E9 | | A17A1 - P6 | | ANT EN | 13.70 | |
| 529 | WHT TEF 22 | A17A4 - E10 | | A17A1 - P2 | | RF INPUT PWR | 16.75 | |
| 530 | WHT TEF 22 | A17A4 - E11 | | A17A1 - E1 | | GND | 14.25 | |
| 531 | WHT TEF 22 | A17A4 - E12 | | A17A1 - E1 | | GND | 14.25 | |

Table 5-2q. System Wirelist – RF Input Module (A17) (Cont)

| 1 | 2 | 3 | 4 | 5 | 6 | 7 | 8 | 9 |
|---|---|---|---|---|---|---|---|---|
| WIRE NO. | COLOR SIZE AWG | WIRE RUNS FROM | NOTE OR VIEW | TO | NOTE OR VIEW | FUNCTION ROUTING REMARKS | APPROX LENGTH (INCHES) | USE FIND NO. |
| 532 | WHT TEF 22 | A17A4 - E13 | | A17A2 - P6 | | 0.01 - 1 AGC | 3.25 | |
| 533 | WHT TEF 22 | A17A4 - E14 | | A17A2 - P7 | | AM MOD + DC REF (0) | 4.00 | |
| 534 | WHT TEF 22 | A17A4 - E15 | | A17 J7 - C6 | | EXT FWD PWR | 13.30 | |
| 535 | WHT TEF 22 | A17A4 - E16 | | A17A2 - P5 | | WB AMP HI/LO | 3.65 | |
| 536 | WHT TEF 22 | A17A4 - E17 | | A17 J7 - C7 | | EXT RFL PWR | 13.65 | |
| 537 | WHT TEF 22 | A17A4 - E18 | | A17A3 - P4 | | OFFSET MOD | 15.90 | |
| 538 | WHT TEF 22 | A17A4 - E19 | | A17A2 - P10 | | DSBSC MOD | 5.35 | |
| 539 | WHT TEF 22 | A17A4 - E20 | | A17A1 - P4 | | OVER TEMP | 16.75 | |
| 540 | WHT TEF 22 | A17A4 - E21 | | A17A2 - P8 | | CARRIER + MOD LVL | 4.50 | |
| 541 | WHT TEF 22 | A17A4 - E22 | | A17A2 - P4 | | MON + DSB/GEN | 3.50 | |
| 542 | WHT TEF 22 | A17A4 - E23 | | A17A3 - P7 | | +12V | 3.85 | |
| 543 | WHT TEF 22 | A17A4 - E24 | | A17A1 - P1 | | −12V | 5.20 | |
| 544 | WHT TEF 22 | A17A4 - E25 | | A17 S1 - 4 | | 130 DB | 15.00 | |
| 545 | WHT TEF 22 | A17A4 - E26 | | A17 S1 - 5 | | 120 DB | 15.25 | |
| 546 | WHT TEF 22 | A17A4 - E27 | | A17 S1 - 6 | | 110 DB | 15.25 | |
| 547 | WHT TEF 22 | A17A4 - E28 | | A17 S1 - 7 | | 100 DB | 15.75 | |
| 548 | WHT TEF 22 | A17A4 - E29 | | A17 S1 - 8 | | 90 DB | 16.12 | |
| 549 | WHT TEF 22 | A17A4 - E30 | | A17 S1 - 9 | | 80 DB | 16.25 | |
| 550 | WHT TEF 22 | A17A4 - E31 | | A17 S1 - 10 | | 70 DB | 14.75 | |
| 551 | WHT TEF 22 | A17A4 - E32 | | A17 S1 - 11 | | 60 DB | 14.25 | |
| 552 | WHT TEF 22 | A17A4 - E33 | | A17 S1 - 12 | | 50 DB | 13.25 | |
| 553 | WHT TEF 22 | A17A4 - E34 | | A17 S1 - 13 | | 40 DB | 13.00 | |
| 554 | WHT TEF 22 | A17A4 - E35 | | A17 S1 - 14 | | 30 DB | 12.87 | |
| 555 | WHT TEF 22 | A17A4 - E36 | | A17 S1 - 1 | | 20 DB | 13.50 | |
| 556 | WHT TEF 22 | A17A4 - E37 | | A17 S1 - 2 | | 10 DB | 13.37 | |
| 557 | WHT TEF 22 | A17A4 - E38 | | A17 S1 - 3 | | 0 DB | 13.75 | |
| 558 | WHT TEF 22 | A17A4 - E39 | | A17 E2 | | GND | 3.25 | |
| 560 | WHT TEF 22 | A17 - C10 | | A17 S1 - 15 | | +5V | 12.75 | |
| 561 | WHT TEF 22 | A17 - C9 | | A17 FL1 | | +12V | 16.45 | |
| 562 | WHT TEF 22 | A17 - C9 | | A17 C3 | | +12V | 5.00 | |
| 563 | WHT TEF 22 | A17 - FL7 | | A17 C1 | | −12V | 19.25 | |
| 564 | WHT TEF 22 | A17 - E3 | | A17 S2 - 1 | | GND | 5.80 | |

Table 5-2r. System Wirelist – Front Panel Assembly (A18)

| 1 | 2 | 3 | 4 | 5 | 6 | 7 | 8 | 9 |
|---|---|---|---|---|---|---|---|---|
| WIRE NO. | COLOR SIZE AWG | WIRE RUNS FROM | NOTE OR VIEW | TO | NOTE OR VIEW | FUNCTION ROUTING REMARKS | APPROX LENGTH (INCHES) | USE FIND NO. |
| | RIGHT FLEX, SCOPE | A18 P/O P1 - 1 | | A19 P1 - 1 | | +33V | | 034 |
| | RIGHT FLEX, SCOPE | A18 P/O P1 - 2 | | A19 P1 - 2 | | NC | | 034 |
| | RIGHT FLEX, SCOPE | A18 P/O P1 - 3 | | A19 P1 - 3 | | GND | | 034 |
| | RIGHT FLEX, SCOPE | A18 P/O P1 - 4 | | A19 P1 - 4 | | NC | | 034 |

Table 5-2r. System Wirelist – Front Panel Assembly (A18)

| 1 | 2 | 3 | 4 | 5 | 6 | 7 | 8 | 9 |
|---|---|---|---|---|---|---|---|---|
| WIRE NO. | COLOR SIZE AWG | WIRE RUNS FROM | NOTE OR VIEW | TO | NOTE OR VIEW | FUNCTION ROUTING REMARKS | APPROX LENGTH (INCHES) | USE FIND NO. |
| | RIGHT FLEX, SCOPE | A18 P/O P1 - 1 | | A19 P1 - 1 | | +33V | | 034 |
| | RIGHT FLEX, SCOPE | A18 P/O P1 - 2 | | A19 P1 - 2 | | NC | | 034 |
| | RIGHT FLEX, SCOPE | A18 P/O P1 - 3 | | A19 P1 - 3 | | GND | | 034 |
| | RIGHT FLEX, SCOPE | A18 P/O P1 - 4 | | A19 P1 - 4 | | NC | | 034 |
| | RIGHT FLEX, SCOPE | A18 P/O P1 - 5 | | A19 P1 - 5 | | $\overline{\text{ANT SEL}}$ | | 034 |
| | RIGHT FLEX, SCOPE | A18 P/O P1 - 6 | | A19 P1 - 6 | | NC | | 034 |
| | RIGHT FLEX, SCOPE | A18 P/O P1 - 7 | | A19 P1 - 7 | | GND | | 034 |
| | RIGHT FLEX, SCOPE | A18 P/O P1 - 8 | | A19 P1 - 8 | | 5 VDC + AM MOD | | 034 |
| | RIGHT FLEX, SCOPE | A18 P/O P1 - 9 | | A19 P1 - 9 | | AM MOD + DC REF (I) | | 034 |
| | RIGHT FLEX, SCOPE | A18 P/O P1 - 10 | | A19 P1 - 10 | | FOCUS LVL | | 034 |
| | RIGHT FLEX, SCOPE | A18 P/O P1 - 11 | | A19 P1 - 11 | | INTENSITY LVL | | 034 |
| | RIGHT FLEX, SCOPE | A18 P/O P1 - 12 | | A19 P1 - 12 | | −5V | | 034 |
| | RIGHT FLEX, SCOPE | A18 P/O P1 - 13 | | A19 P1 - 13 | | +5V | | 034 |
| | RIGHT FLEX, SCOPE | A18 P/O P1 - 14 | | A19 P1 - 14 | | NC | | 034 |
| | RIGHT FLEX, SCOPE | A18 P/O P1 - 15 | | A19 P1 - 15 | | +8V | | 034 |
| | RIGHT FLEX, SCOPE | A18 P/O P1 - 16 | | A19 P1 - 16 | | SWP VERNIER VOLT | | 034 |
| | RIGHT FLEX, SCOPE | A18 P/O P1 - 17 | | A19 P1 - 17 | | DISPERSION SWP RTN | | 034 |
| | RIGHT FLEX, SCOPE | A18 P/O P1 - 18 | | A19 P1 - 18 | | DISPERSION SWP RTN | | 034 |
| | RIGHT FLEX, SCOPE | A18 P/O P1 - 19 | | A19 P1 - 19 | | SYNTH SWP | | 034 |
| | RIGHT FLEX, SCOPE | A18 P/O P1 - 20 | | A19 P1 - 20 | | SYNTH SWP | | 034 |
| | RIGHT FLEX, SCOPE | A18 P/O P1 - 21 | | A19 P1 - 21 | | DISPERSION SWP | | 034 |
| | RIGHT FLEX, SCOPE | A18 P/O P1 - 22 | | A19 P1 - 22 | | DISPERSION SWP | | 034 |
| | RIGHT FLEX, SCOPE | A18 P/O P1 - 23 | | A19 P1 - 23 | | −5V | | 034 |
| | RIGHT FLEX, SCOPE | A18 P/O P1 - 24 | | A19 P1 - 24 | | −5V | | 034 |
| | RIGHT FLEX, SCOPE | A18 P/O P1 - 25 | | A19 P1 - 25 | | HORIZ POS | | 034 |
| | RIGHT FLEX, SCOPE | A18 P/O P1 - 26 | | A19 P1 - 26 | | HORIZ POS | | 034 |
| | RIGHT FLEX, SCOPE | A18 P/O P1 - 27 | | A19 P1 - 27 | | NC | | 034 |
| | RIGHT FLEX, SCOPE | A18 P/O P1 - 28 | | A19 P1 - 28 | | NC | | 034 |
| | RIGHT FLEX, SCOPE | A18 P/O P1 - 29 | | A19 P1 - 29 | | +5V | | 034 |
| | RIGHT FLEX, SCOPE | A18 P/O P1 - 30 | | A19 P1 - 30 | | +5V | | 034 |
| | RIGHT FLEX, SCOPE | A18 P/O P1 - 31 | | A19 P1 - 31 | | GND | | 034 |
| | RIGHT FLEX, SCOPE | A18 P/O P1 - 32 | | A19 P1 - 32 | | GND | | 034 |
| | RIGHT FLEX, SCOPE | A18 P/O P1 - 33 | | A19 P1 - 33 | | NC | | 034 |
| | RIGHT FLEX, SCOPE | A18 P/O P1 - 34 | | A19 P1 - 34 | | AUTO/NORM TRIG | | 034 |
| | RIGHT FLEX, SCOPE | A18 P/O P1 - 35 | | A19 P1 - 35 | | −5V | | 034 |
| | RIGHT FLEX, SCOPE | A18 P/O P1 - 36 | | A19 P1 - 36 | | −5V | | 034 |
| | RIGHT FLEX, SCOPE | A18 P/O P1 - 37 | | A19 P1 - 37 | | TRIG LVL | | 034 |
| | RIGHT FLEX, SCOPE | A18 P/O P1 - 38 | | A19 P1 - 38 | | TRIG LVL | | 034 |
| | RIGHT FLEX, SCOPE | A18 P/O P1 - 39 | | A19 P1 - 39 | | VERT POS | | 034 |
| | RIGHT FLEX, SCOPE | A18 P/O P1 - 40 | | A19 P1 - 40 | | VERT POS | | 034 |
| | RIGHT FLEX, SCOPE | A18 P/O P1 - 41 | | A19 P1 - 41 | | VERT GAIN | | 034 |
| | RIGHT FLEX, SCOPE | A18 P/O P1 - 42 | | A19 P1 - 42 | | VERT GAIN | | 034 |
| | RIGHT FLEX, SCOPE | A18 P/O P1 - 43 | | A19 P1 - 43 | | VERT GAIN RTN | | 034 |
| | RIGHT FLEX, SCOPE | A18 P/O P1 - 44 | | A19 P1 - 44 | | VERT GAIN RTN | | 034 |
| | RIGHT FLEX, SCOPE | A18 P/O P1 - 45 | | A19 P1 - 45 | | OPTICAL ENC A | | 034 |

Table 5-2r. System Wirelist – Front Panel Assembly (A18) (Cont)

| 1 | 2 | 3 | 4 | 5 | 6 | 7 | 8 | 9 |
|---|---|---|---|---|---|---|---|---|
| WIRE NO. | COLOR SIZE AWG | WIRE RUNS FROM | NOTE OR VIEW | TO | NOTE OR VIEW | FUNCTION ROUTING REMARKS | APPROX LENGTH (INCHES) | USE FIND NO. |
| | RIGHT FLEX, SCOPE | A18 P/O P1 - 46 | | A19 P1 - 46 | | NC | | 034 |
| | RIGHT FLEX, SCOPE | A18 P/O P1 - 47 | | A19 P1 - 47 | | OPTICAL ENC B | | 034 |
| | RIGHT FLEX, SCOPE | A18 P/O P1 - 48 | | A19 P1 - 48 | | NC | | 034 |
| | RIGHT FLEX, SCOPE | A18 P/O P1 - 49 | | A19 P1 - 49 | | 10V/DIV RNG SEL | | 034 |
| | RIGHT FLEX, SCOPE | A18 P/O P1 - 50 | | A19 P1 - 50 | | 10V/DIV RNG SEL | | 034 |
| | RIGHT FLEX, SCOPE | A18 P/O P1 - 51 | | A19 P1 - 51 | | 1V/DIV RNG SEL | | 034 |
| | RIGHT FLEX, SCOPE | A18 P/O P1 - 52 | | A19 P1 - 52 | | 1V/DIV RNG SEL | | 034 |
| | RIGHT FLEX, SCOPE | A18 P/O P1 - 53 | | A19 P1 - 53 | | 0.1V/DIV RNG SEL | | 034 |
| | RIGHT FLEX, SCOPE | A18 P/O P1 - 54 | | A19 P1 - 54 | | 0.1V/DIV RNG SEL | | 034 |
| | RIGHT FLEX, SCOPE | A18 P/O P1 - 55 | | A19 P1 - 55 | | GND | | 034 |
| | RIGHT FLEX, SCOPE | A18 P/O P1 - 56 | | A19 P1 - 56 | | GND | | 034 |
| | RIGHT FLEX, SCOPE | A18 P/O P1 - 57 | | A19 P1 - 57 | | 0.01V/DIV RNG SEL | | 034 |
| | RIGHT FLEX, SCOPE | A18 P/O P1 - 58 | | A19 P1 - 58 | | 0.01V/DIV RNG SEL | | 034 |
| | RIGHT FLEX, SCOPE | A18 P/O P1 - 59 | | A19 P1 - 59 | | HORIZ INPUT | | 034 |
| | RIGHT FLEX, SCOPE | A18 P/O P1 - 60 | | A19 P1 - 60 | | HORIZ INPUT | | 034 |
| | LEFT FLEX, DISPLAY | A18 P/O P2 - 1 | | A19 P2 - 1 | | +12V | | 033 |
| | LEFT FLEX, DISPLAY | A18 P/O P2 - 2 | | A19 P2 - 2 | | SQUELCH LVL | | 033 |
| | LEFT FLEX, DISPLAY | A18 P/O P2 - 3 | | A19 P2 - 3 | | VOL CNTL AUDIO RTN | | 033 |
| | LEFT FLEX, DISPLAY | A18 P/O P2 - 4 | | A19 P2 - 4 | | VOL CNTL AUDIO | | 033 |
| | LEFT FLEX, DISPLAY | A18 P/O P2 - 5 | | A19 P2 - 5 | | WB/NB | | 033 |
| | LEFT FLEX, DISPLAY | A18 P/O P2 - 6 | | A19 P2 - 6 | | NC | | 033 |
| | LEFT FLEX, DISPLAY | A18 P/O P2 - 7 | | A19 P2 - 7 | | EXT HORIZ SEL | | 033 |
| | LEFT FLEX, DISPLAY | A18 P/O P2 - 8 | | A19 P2 - 8 | | 100 MS/DIV SWP SEL | | 033 |
| | LEFT FLEX, DISPLAY | A18 P/O P2 - 9 | | A19 P2 - 9 | | 10 MS/DIV SWP SEL | | 033 |
| | LEFT FLEX, DISPLAY | A18 P/O P2 - 10 | | A18 P2 - 10 | | 1 MS/DIV SWP SEL | | 033 |
| | LEFT FLEX, DISPLAY | A18 P/O P2 - 11 | | A19 P2 - 11 | | 100 µS/DIV SWP SEL | | 033 |
| | LEFT FLEX, DISPLAY | A18 P/O P2 - 12 | | A19 P2 - 12 | | 10 µS/DIV SWP SEL | | 033 |
| | LEFT FLEX, DISPLAY | A18 P/O P2 - 13 | | A19 P2 - 13 | | 1 µS/DIV SWP SEL | | 033 |
| | LEFT FLEX, DISPLAY | A18 P/O P2 - 14 | | A19 P2 - 14 | | NC | | 033 |
| | LEFT FLEX, DISPLAY | A18 P/O P2 - 15 | | A19 P2 - 15 | | +5V | | 033 |
| | LEFT FLEX, DISPLAY | A18 P/O P2 - 16 | | A19 P2 - 16 | | GND | | 033 |
| | LEFT FLEX, DISPLAY | A18 P/O P2 - 17 | | A19 P2 - 17 | | SIG PRES LED | | 033 |
| | LEFT FLEX, DISPLAY | A18 P/O P2 - 18 | | A19 P2 - 18 | | BFO FREQ CNTL | | 033 |
| | LEFT FLEX, DISPLAY | A18 P/O P2 - 19 | | A19 P2 - 19 | | GND | | 033 |
| | LEFT FLEX, DISPLAY | A18 P/O P2 - 20 | | A19 P2 - 20 | | GND | | 033 |
| | LEFT FLEX, DISPLAY | A18 P/O P2 - 21 | | A19 P2 - 21 | | MON/GEN | | 033 |
| | LEFT FLEX, DISPLAY | A18 P/O P2 - 22 | | A19 P2 - 22 | | NC | | 033 |
| | LEFT FLEX, DISPLAY | A18 P/O P2 - 23 | | A19 P2 - 23 | | IMAGE HI/LO | | 033 |
| | LEFT FLEX, DISPLAY | A18 P/O P2 - 24 | | A19 P2 - 24 | | NC | | 033 |
| | LEFT FLEX, DISPLAY | A18 P/O P2 - 25 | | A19 P2 - 25 | | NC | | 033 |
| | LEFT FLEX, DISPLAY | A18 P/O P2 - 26 | | A19 P2 - 26 | | NC | | 033 |
| | LEFT FLEX, DISPLAY | A18 P/O P2 - 27 | | A19 P2 - 27 | | HDST AUDIO | | 033 |
| | LEFT FLEX, DISPLAY | A18 P/O P2 - 28 | | A19 P2 - 28 | | NC | | 033 |
| | LEFT FLEX, DISPLAY | A18 P/O P2 - 29 | | A19 P2 - 29 | | MIC INPUT | | 033 |
| | LEFT FLEX, DISPLAY | A18 P/O P2 - 30 | | A19 P2 - 30 | | NC | | 033 |
| | LEFT FLEX, DISPLAY | A18 P/O P2 - 31 | | A19 P2 - 31 | | NC | | 033 |
| | LEFT FLEX, DISPLAY | A18 P/O P2 - 32 | | A19 P2 - 32 | | NC | | 033 |

Table 5-2r. System Wirelist – Front Panel Assembly (A18) (Cont)

| 1 | 2 | 3 | 4 | 5 | 6 | 7 | 8 | 9 |
|---|---|---|---|---|---|---|---|---|
| WIRE NO. | COLOR SIZE AWG | WIRE RUNS FROM | NOTE OR VIEW | TO | NOTE OR VIEW | FUNCTION ROUTING REMARKS | APPROX LENGTH (INCHES) | USE FIND NO. |
| | LEFT FLEX, DISPLAY | A18 P/O P2 - 33 | | A19 P2 - 33 | | NC | | 033 |
| | LEFT FLEX, DISPLAY | A18 P/O P2 - 34 | | A19 P2 - 34 | | NC | | 033 |
| | LEFT FLEX, DISPLAY | A18 P/O P2 - 35 | | A19 P2 - 35 | | NC | | 033 |
| | LEFT FLEX, DISPLAY | A18 P/O P2 - 36 | | A19 P2 - 36 | | NC | | 033 |
| | LEFT FLEX, DISPLAY | A18 P/O P2 - 37 | | A19 P2 - 37 | | NC | | 033 |
| | LEFT FLEX, DISPLAY | A18 P/O P2 - 38 | | A19 P2 - 38 | | NC | | 033 |
| | LEFT FLEX, DISPLAY | A18 P/O P2 - 39 | | A19 P2 - 39 | | NC | | 033 |
| | LEFT FLEX, DISPLAY | A18 P/O P2 - 40 | | A19 P2 - 40 | | NC | | 033 |
| | LEFT FLEX, DISPLAY | A18 P/O P2 - 41 | | A19 P2 - 41 | | NC | | 033 |
| | LEFT FLEX, DISPLAY | A18 P/O P2 - 42 | | A19 P2 - 42 | | NC | | 033 |
| | LEFT FLEX, DISPLAY | A18 P/O P2 - 43 | | A19 P2 - 43 | | NC | | 033 |
| | LEFT FLEX, DISPLAY | A18 P/O P2 - 44 | | A19 P2 - 44 | | NC | | 033 |
| | LEFT FLEX, DISPLAY | A18 P/O P2 - 45 | | A19 P2 - 45 | | NC | | 033 |
| | LEFT FLEX, DISPLAY | A18 P/O P2 - 46 | | A19 P2 - 46 | | NC | | 033 |
| | LEFT FLEX, DISPLAY | A18 P/O P2 - 47 | | A19 P2 - 47 | | INT MOD (I) | | 033 |
| | LEFT FLEX, DISPLAY | A18 P/O P2 - 48 | | A19 P2 - 48 | | INT MOD (I) | | 033 |
| | LEFT FLEX, DISPLAY | A18 P/O P2 - 49 | | A19 P2 - 49 | | INT MOD RTN (I) | | 033 |
| | LEFT FLEX, DISPLAY | A18 P/O P2 - 50 | | A19 P2 - 50 | | INT MOD RTN (I) | | 033 |
| | LEFT FLEX, DISPLAY | A18 P/O P2 - 51 | | A19 P2 - 51 | | GND | | 033 |
| | LEFT FLEX, DISPLAY | A18 P/O P2 - 52 | | A19 P2 - 52 | | GND | | 033 |
| | LEFT FLEX, DISPLAY | A18 P/O P2 - 53 | | A19 P2 - 53 | | 1 KHZ SINE RTN (I) | | 033 |
| | LEFT FLEX, DISPLAY | A18 P/O P2 - 54 | | A19 P2 - 54 | | 1 KHZ SINE RTN (I) | | 033 |
| | LEFT FLEX, DISPLAY | A18 P/O P2 - 55 | | A19 P2 - 55 | | 1 KHZ SINE (I) | | 033 |
| | LEFT FLEX, DISPLAY | A18 P/O P2 - 56 | | A19 P2 - 56 | | EXT MOD RTN (I) | | 033 |
| | LEFT FLEX, DISPLAY | A18 P/O P2 - 57 | | A19 P2 - 57 | | +5V | | 033 |
| | LEFT FLEX, DISPLAY | A18 P/O P2 - 58 | | A19 P2 - 58 | | EXT MOD (I) | | 033 |
| | LEFT FLEX, DISPLAY | A18 P/O P2 - 59 | | A19 P2 - 59 | | GND | | 033 |
| | LEFT FLEX, DISPLAY | A18 P/O P2 - 60 | | A19 P2 - 60 | | GND | | 033 |
| A18055 | RIBBON CABLE | A18A1 J1 - 1 | | A15 J1 - 1 | | AF DATA BUS 0 | | 055 |
| A18055 | RIBBON CABLE | A18A1 J1 - 2 | | A15 J1 - 2 | | AF DATA BUS 1 | | 055 |
| A18055 | RIBBON CABLE | A18A1 J1 - 3 | | A15 J1 - 3 | | AF DATA BUS 3 | | 055 |
| A18055 | RIBBON CABLE | A18A1 J1 - 4 | | A15 J1 - 4 | | AF DATA BUS 2 | | 055 |
| A18055 | RIBBON CABLE | A18A1 J1 - 5 | | A15 J1 - 5 | | $\overline{\text{LS 1}}$ | | 055 |
| A18055 | RIBBON CABLE | A18A1 J1 - 6 | | A15 J1 - 6 | | $\overline{\text{LS 2}}$ | | 055 |
| A18055 | RIBBON CABLE | A18A1 J1 - 7 | | A15 J1 - 7 | | OVEN LED ANODE | | 055 |
| A18055 | RIBBON CABLE | A18A1 J1 - 8 | | A15 J1 - 8 | | OVEN LED CATHODE | | 055 |
| A18055 | RIBBON CABLE | A18A1 J1 - 9 | | A15 J1 - 9 | | DC LED CATHODE | | 055 |
| A18055 | RIBBON CABLE | A18A1 J1 - 10 | | A15 J1 - 10 | | DC LED ANODE | | 055 |
| A18055 | RIBBON CABLE | A18A1 J1 - 11 | | A15 J1 - 11 | | AC LED | | 055 |
| A18055 | RIBBON CABLE | A18A1 J1 - 12 | | A15 J1 - 12 | | $\overline{\text{LS 0}}$ | | 055 |
| A18055 | RIBBON CABLE | A18A1 J1 - 13 | | A15 J1 - 13 | | +5V | | 055 |
| A18055 | RIBBON CABLE | A18A1 J1 - 14 | | A15 J1 - 14 | | +5V | | 055 |
| A18055 | RIBBON CABLE | A18A1 J1 - 15 | | A15 J1 - 15 | | GND | | 055 |
| A18055 | RIBBON CABLE | A18A1 J1 - 16 | | A15 J1 - 16 | | GND | | 055 |
| A18055 | RIBBON CABLE | A18A1 J2 - 1 | | A15 J2 - 1 | | ROW 4 | | 055 |
| A18055 | RIBBON CABLE | A18A1 J2 - 2 | | A15 J2 - 2 | | ROW 3 | | 055 |
| A18055 | RIBBON CABLE | A18A1 J2 - 3 | | A15 J2 - 3 | | NC | | 055 |

Table 5-2r. System Wirelist – Front Panel Assembly (A18) (Cont)

| 1 | 2 | | 3 | 4 | 5 | 6 | 7 | 8 | 9 |
|---|---|---|---|---|---|---|---|---|---|
| WIRE NO. | COLOR | SIZE AWG | WIRE RUNS FROM | NOTE OR VIEW | TO | NOTE OR VIEW | FUNCTION ROUTING REMARKS | APPROX LENGTH (INCHES) | USE FIND NO. |
| A18055 | RIBBON CABLE | | A18A1 J2 - 4 | | A15 J2 - 4 | | COLUMN 3 | | 055 |
| A18055 | RIBBON CABLE | | A18A1 J2 - 5 | | A15 J2 - 5 | | ROW 1 | | 055 |
| A18055 | RIBBON CABLE | | A18A1 J2 - 6 | | A15 J2 - 6 | | ROW 2 | | 055 |
| A18055 | RIBBON CABLE | | A18A1 J2 - 7 | | A15 J2 - 7 | | COLUMN 0 | | 055 |
| A18055 | RIBBON CABLE | | A18A1 J2 - 8 | | A15 J2 - 8 | | COLUMN 1 | | 055 |
| A18055 | RIBBON CABLE | | A18A1 J2 - 9 | | A15 J2 - 9 | | COLUMN 2 | | 055 |
| A18055 | RIBBON CABLE | | A18A1 J2 - 10 | | A15 J2 - 10 | | ROW 0 | | 055 |
| A18055 | RIBBON CABLE | | A18A1 J2 - 11 | | A15 J2 - 11 | | $\overline{\text{CSSG CONT}}$ | | 055 |
| A18055 | RIBBON CABLE | | A18A1 J2 - 12 | | A15 J2 - 12 | | $\overline{\text{CSSG BURST}}$ | | 055 |
| A18055 | RIBBON CABLE | | A18A1 J2 - 13 | | A15 J2 - 13 | | $\overline{\text{POWER OFF}}$ | | 055 |
| A18055 | RIBBON CABLE | | A18A1 J2 - 14 | | A15 J2 - 14 | | $\overline{\text{POWER ON}}$ | | 055 |
| A18055 | RIBBON CABLE | | A18A1 J2 - 15 | | A15 J2 - 15 | | MON/GEN | | 055 |
| A18055 | RIBBON CABLE | | A18A1 J2 - 16 | | A15 J2 - 16 | | SPARE BIT | | 055 |
| W5 | RIBBON CABLE | | A18A1 J4 - 1 | | A18A2 J3 - 1 | | $\overline{\text{CSSG BURST EN}}$ | | 052 |
| W5 | RIBBON CABLE | | A18A1 J4 - 2 | | A18A2 J3 - 2 | | GND | | 052 |
| W5 | RIBBON CABLE | | A18A1 J4 - 3 | | A18A2 J3 - 3 | | GND | | 052 |
| W5 | RIBBON CABLE | | A18A1 J4 - 4 | | A18A2 J3 - 4 | | NC | | 052 |
| W5 | RIBBON CABLE | | A18A1 J4 - 5 | | A18A2 J3 - 5 | | MON/GEN | | 052 |
| W5 | RIBBON CABLE | | A18A1 J4 - 6 | | A18A2 J3 - 6 | | $\overline{\text{POWER ON EN}}$ | | 052 |
| W5 | RIBBON CABLE | | A18A1 J4 - 7 | | A18A2 J3 - 7 | | $\overline{\text{POWER OFF EN}}$ | | 052 |
| W5 | RIBBON CABLE | | A18A1 J4 - 8 | | A18A2 J3 - 8 | | $\overline{\text{CSSG CONT EN}}$ | | 052 |
| | COAX CABLE | | A18 J3 | | A19 E1 | | EXT MOD IN | | 005 |
| | COAX CABLE | | A18 J4 | | A19 E2 | | MOD OUT | | 005 |
| | COAX CABLE | | A18 J6 | | A19 E3 | | DEMOD OUT | | 006 |
| | COAX CABLE | | A18 J7 | | A19 E8 | | EXT INPUT | | 005 |

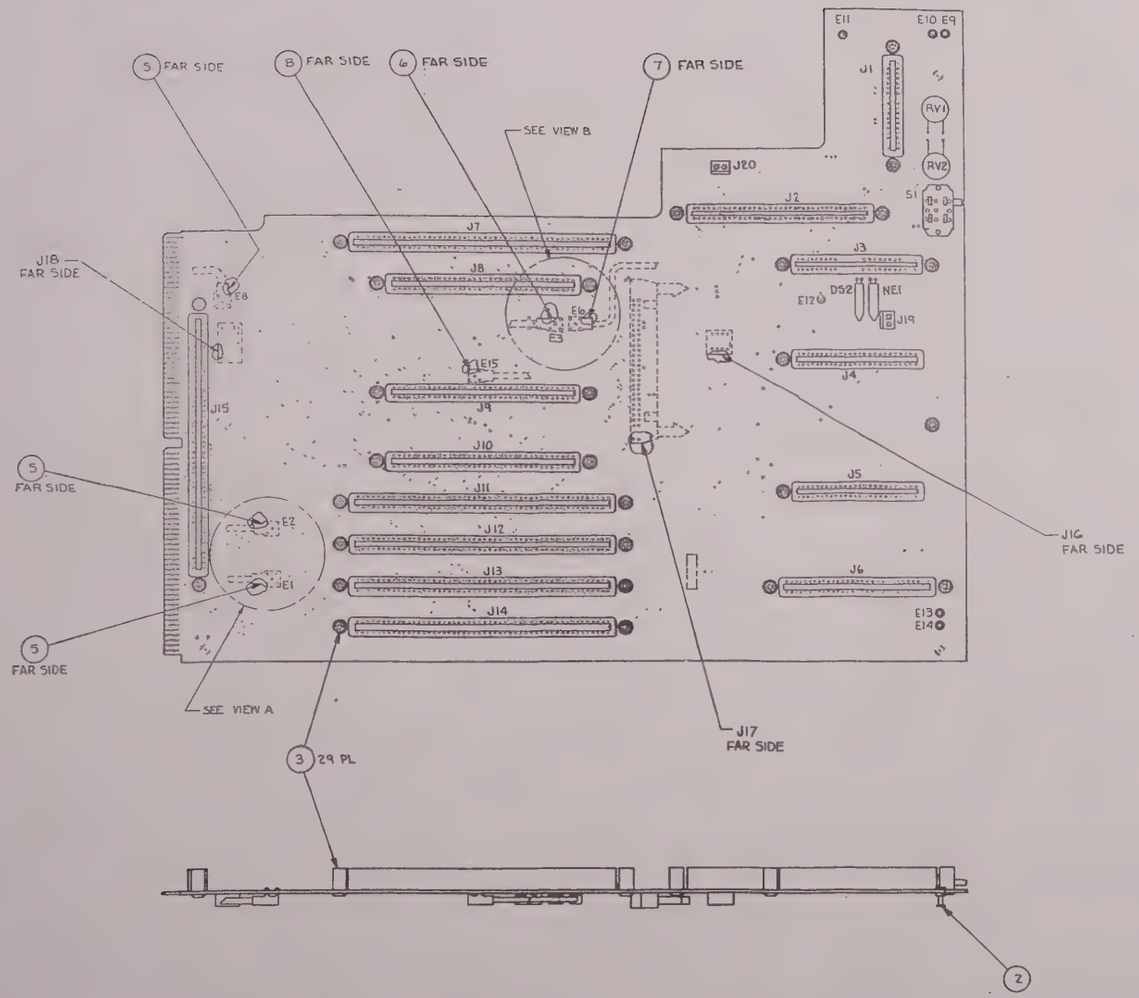


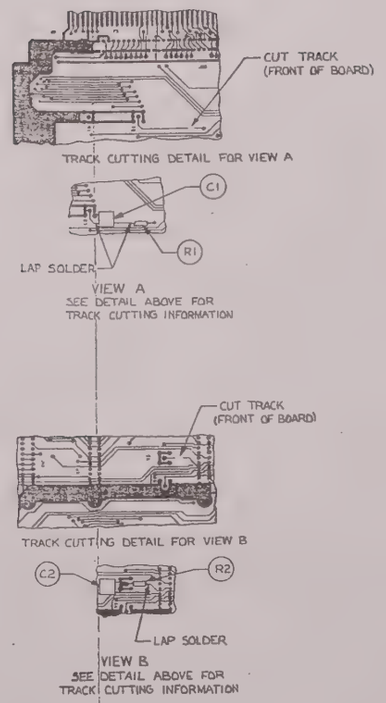


## SYSTEM MOTHERBOARD (A19)

| Find No. | Qty. Req. | Part No. | Nomenclature | Part Value |
|---|---|---|---|---|
| 002 | 6 | 29-80375B41 | TERMINAL | |
| 003 | 29 | 43-80375B30 | STANDOFF | |
| 005 | 3 | 30-80343B97 | CABLE ASSEMBLY | A18/A19 |
| 006 | 1 | 30-80343B98 | CABLE ASSEMBLY | A18J24/A19E3 |
| 007 | 1 | 30-80343B99 | CABLE ASSEMBLY | A19E9/SPEAKER |
| 008 | 1 | 30-80344B01 | CABLE ASSEMBLY | A19E15/A18J1 |
| C 001 | 1 | 21-80344B38 | CAPACITOR | .047UF-10-100 |
| C 002 | 1 | 21-80344B38 | CAPACITOR | .047UF-10-100 |
| DS001 | 1 | 65-80339B07 | LAMP, NEON | |
| DS002 | 1 | 65-80339B07 | LAMP, NEON | |
| J 001 | 1 | 09-80340B38 | CONNECTOR | |
| J 002 | 1 | 09-80340B41 | CONNECTOR | |
| J 003 | 1 | 09-80340B39 | CONNECTOR | |
| J 004 | 1 | 09-80340B39 | CONNECTOR | |
| J 005 | 1 | 09-80340B39 | CONNECTOR | |
| J 006 | 1 | 09-80340B40 | CONNECTOR | |
| J 007 | 1 | 09-80340B43 | CONNECTOR | |
| J 008 | 1 | 09-80340B41 | CONNECTOR | |
| J 009 | 1 | 09-80340B41 | CONNECTOR | |
| J 010 | 1 | 09-80340B41 | CONNECTOR | |
| J 011 | 1 | 09-80340B43 | CONNECTOR | |
| J 012 | 1 | 09-80340B43 | CONNECTOR | |
| J 013 | 1 | 09-80340B43 | CONNECTOR | |
| J 014 | 1 | 09-80340B43 | CONNECTOR | |
| J 015 | 1 | 09-80340B43 | CONNECTOR | |
| J 016 | 1 | 09-80331A95 | SOCKET, SOLDER DIP | 8 PIN |
| J 017 | 1 | 28-80343B55 | CONNECTOR | |
| J 018 | 1 | 09-80331A96 | SOCKET, SOLDER DIP | 14 PIN |
| J 019 | 1 | 09-80372B68 | 2-PIN CONNECTOR | |
| J 020 | 1 | 09-80372B66 | 2-PIN CONNECTOR | |
| NE 001 | 1 | 65-80339B07 | NEON LAMP | |
| R 001 | 1 | 06-00124A11 | RESISTOR | 27-5-1/4 |
| R 002 | 1 | 06-00124A11 | RESISTOR | 27-5-1/4 |
| RV001 | 1 | 05-80339B83 | VARISTOR | |
| RV002 | 1 | 06-80339B83 | VARISTOR | |
| S 001 | 1 | 40-80339B84 | SWITCH | |

### Cable Assembly (A18/A19) 30-80343B97

| | | | |
|---|---|---|---|
| 005 | | | |
| | 1 | 28-80342B90 | CONNECTOR, BNC |

### Cable Assembly (A18J24/A19E3) 30-80343B98

| | | | |
|---|---|---|---|
| 006 | | | |
| | 1 | 28-80342B90 | CONNECTOR, BNC |

**SYSTEM MOTHERBOARD (A19)**

*Figure 5-1a. Printed Wiring Board Assembly and Parts List (Sheet 1 of 2)*

## SYSTEM MOTHERBOARD (A19)

*Figure 5-1b. Printed Wiring Board Assembly and Parts List (Sheet 2 of 2)*

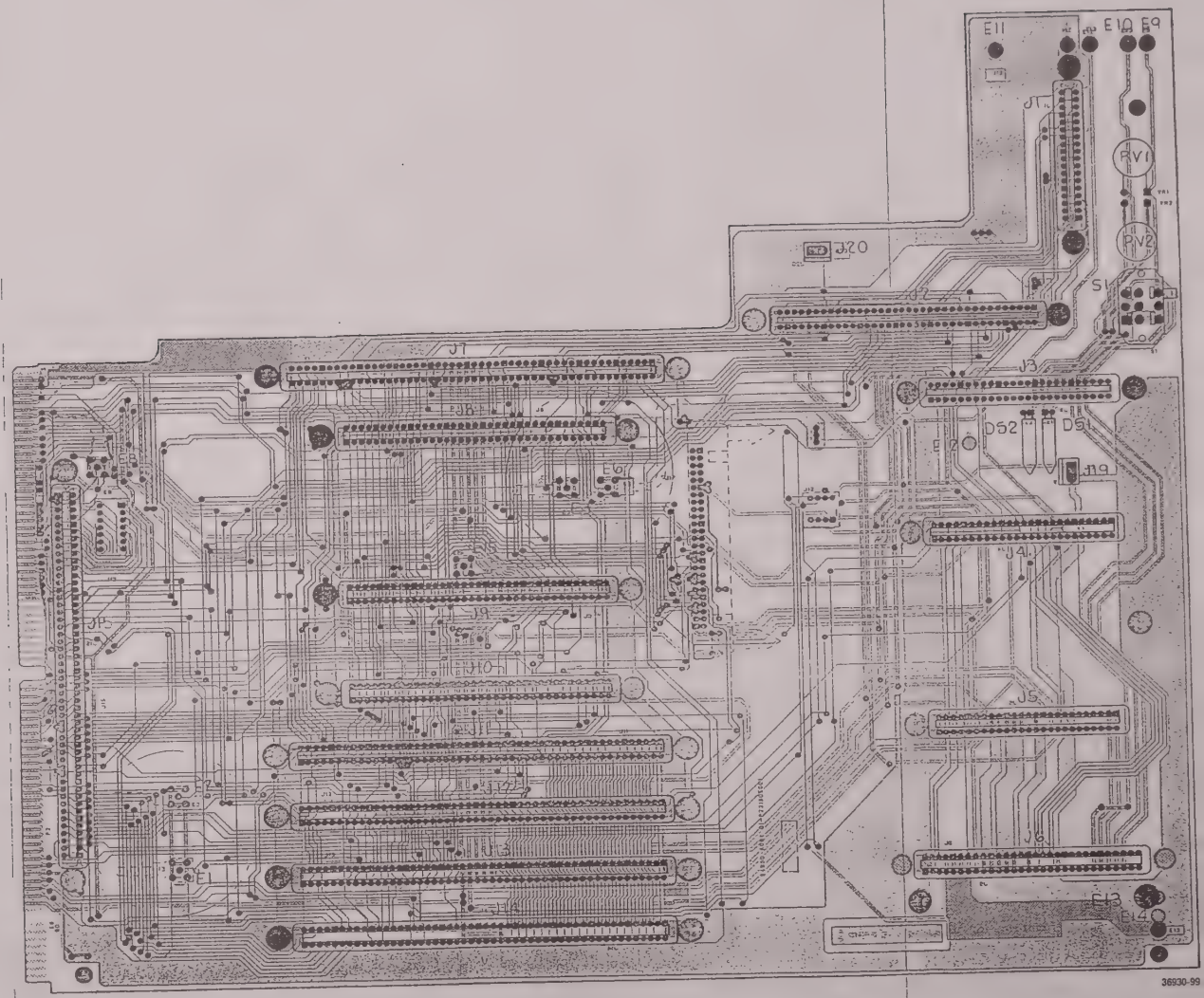


COMPONENTS AND COMPONENT SIDE TRACK SHOWN IN BLACK.

SOLDER-SIDE TRACK SHOWN IN ORANGE

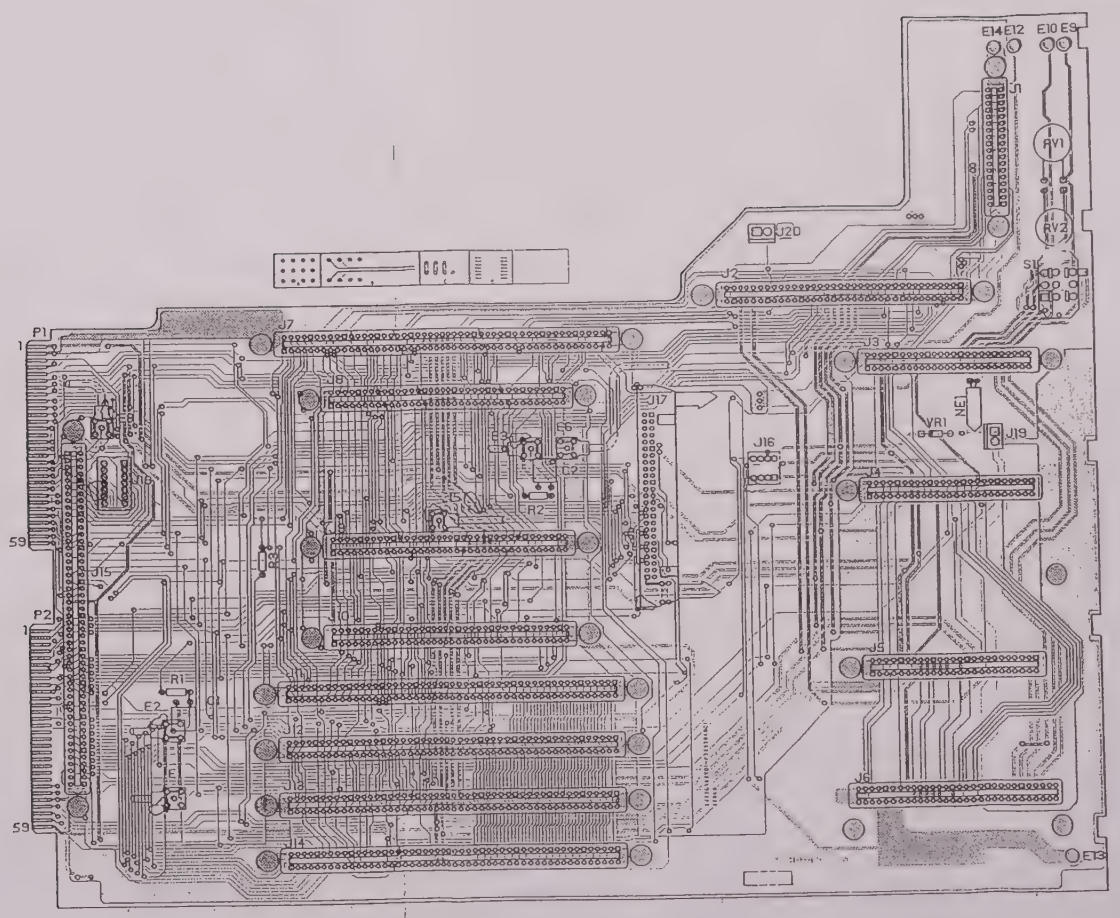


COMPONENTS AND COMPONENT SIDE TRACK SHOWN IN BLACK. SOLDER-SIDE TRACK SHOWN IN ORANGE.

5-96
(2 of 2)

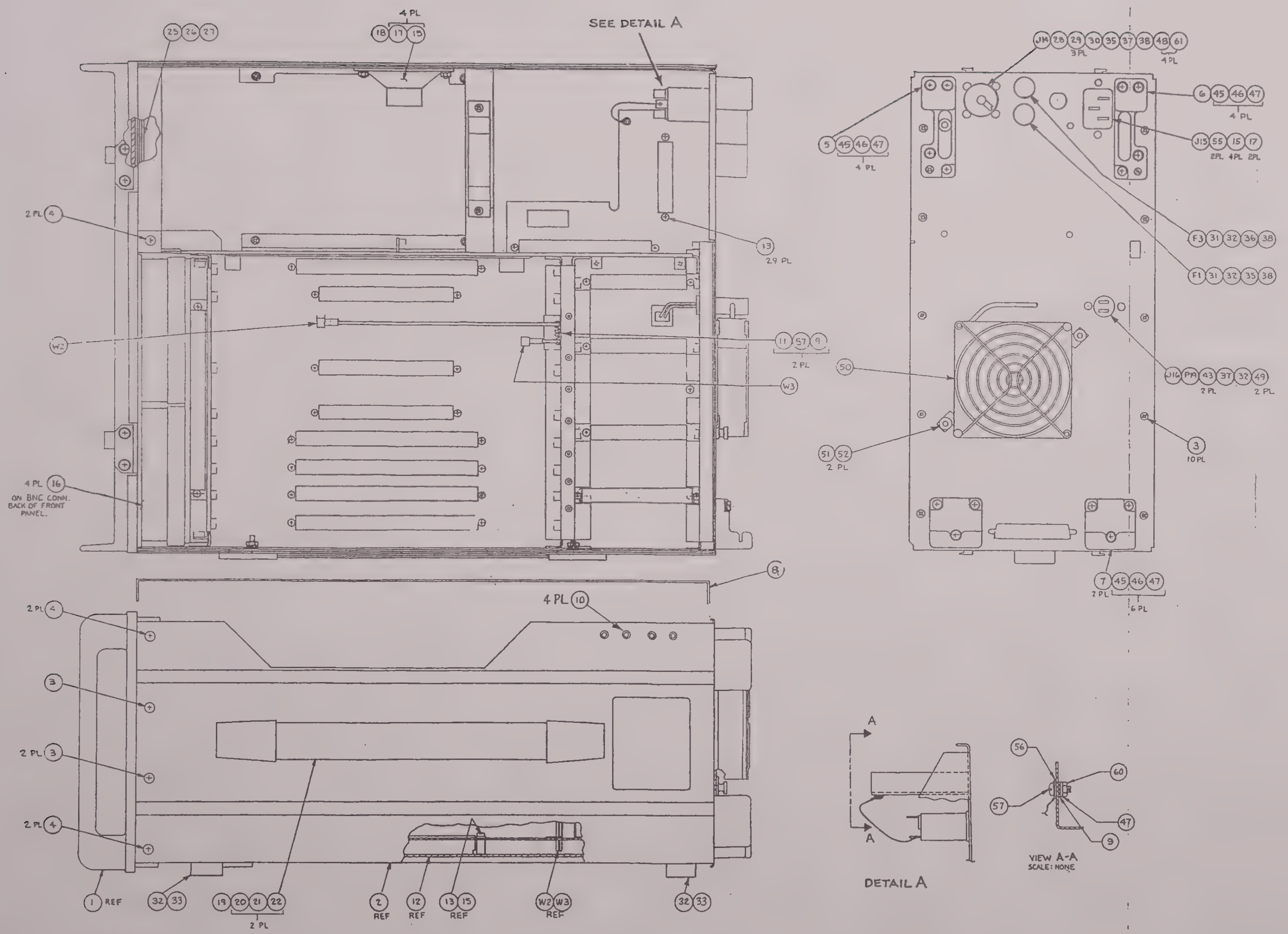


## CHASSIS ASSEMBLY

| Find No. | Qty. Req. | Part No. | Nomenclature | Part Value |
|---|---|---|---|---|
| 003 | 13 | 03-80341B37 | PH W/ASSEMBLED WASHER | 6-32X.312 |
| 004 | 6 | 03-138722 | SCREW | .138-32X.187 |
| 005 | 1 | 75-80343B05 | FOOT,TOP | |
| 006 | 1 | 75-80343B06 | FOOT,BOTTOM | |
| 007 | 2 | 75-80343B07 | FOOT,BATTERY HOLDER,LG | |
| 008 | 1 | 01-80341B34 | COVER, TOP | |
| 009 | 3 | 04-2645 | WASHER, EXTERNAL LOCK #6 | .138 |
| 010 | 4 | 03-139461 | SCREW | .112-40X.250 |
| 011 | 2 | 42-80343B08 | RETAINER | |
| 013 | 29 | 03-129841 | SCREW, PH W/CAPT LOCK WASHER | 4-40X.250 |
| 015 | 8 | 04-7667 | WASHER, LOCK | .112 |
| 016 | 4 | 04-2635 | WASHER, LOCK | .500 |
| 017 | 8 | 02-115547 | NUT | .112-40 |
| 018 | 1 | 50-83205B03 | SPEAKER | |
| 019 | 1 | 55-80343B3[illegible] | HANDLE | |
| 020 | 2 | 04-80341B98 | WASHER | |
| 021 | 2 | 04-400368 | WASHER, LOCK | .190 |
| 022 | 2 | 02-115692 | NUT | .190-32 |
| 025 | 1 | 61-80331A44 | WINDOW,EMI | |
| 026 | 1 | 61-80381A42 | CRT GRATICLE | |
| 027 | 1 | 26-P08059V1 | SHIELD, FRONT CRT | |
| 028 | 1 | 38-80370A52 | SEALING CAP | |
| 029 | 3 | 39-80375B25 | CONTACT, PIN | |
| 030 | 1 | 39-80375B25 | CONTACT, PIN | |
| 031 | 2 | 09-80344B34 | FUSE HOLDER, 250 VOLT | |
| 032 | 1 | 55-80340B44 | BAIL STAND W/CLIPS | |
| 033 | 6 | 05-80375B45 | RIVET | .125X.375 |
| 043 | 2 | 39-80375B24 | CONTACT | |
| 045 | 14 | 03-139779 | SCREW | .138-32X.438 |
| 046 | 14 | 04-9795 | WASHER, LOCK | .138 |
| 047 | 15 | 04-80335A99 | WASHER | .156 |
| 048 | 4 | 05-80375B43 | POP RIVET, DOMED HD, OPEN END | |
| 049 | 2 | 05-80375B42 | POP RIVET, DOMED HD, OPEN END | |
| 050 | 1 | 01-80341B33 | FAN ASSEMBLY | |
| 051 | 2 | 02-80375B29 | NUT, THUMB, ROUND HEAD | |
| 052 | 2 | 42-80343B20 | CLIP | MOUNTING |
| 055 | 2 | 03-136787 | SCREW | .112-40X.375 |
| 056 | 1 | 29-80375B50 | TERMINAL | |
| 057 | 3 | 03-139820 | SCREW | .138-32X.312 |
| 060 | 1 | 02-114704 | NUT | .138-32 |
| 061 | 4 | 04-118786 | WASHER | .138 |
| F 001 | 1 | 65-00010266 | FUSE | 250V-10A |
| F 003 | 1 | 65-00020404 | FUSE | 250V-3A |
| J014 | 1 | 15-10811A07 | CONNECTOR, BATTERY | 4-PIN, MALE |
| J015 | 1 | 09-80339B05 | CONNECTOR, POWER INPUT | |
| J016 | 1 | 09-80340B74 | SOCKET, BLOWER CONNECTOR | |
| P019 | 1 | 39-80375B23 | HOUSING, CONTACT | |
| W002 | 1 | 30-80344B11 | CABLE ASSEMBLY | A17J5 TO A8 |
| W003 | 1 | 30-80344B12 | CABLE ASSEMBLY | A17J4 TO A9 |
| P 001 | 1 | 09-80343B67 | CONNECTOR | |

## FAN ASSEMBLY
01-80341B33

| Find No. | Qty. Req. | Part No. | Nomenclature | Part Value |
|---|---|---|---|---|
| 001 | 1 | 59-80339B02 | FAN | |
| 002 | 1 | 35-80341B39 | GUARD, FINGER | |
| 008 | 1 | 30-80344B20 | POWER CORD | |
| 010 | 1 | 28-80343B77 | CONNECTOR, PLUG | |

*Figure 5-3. Assembly and Parts List*

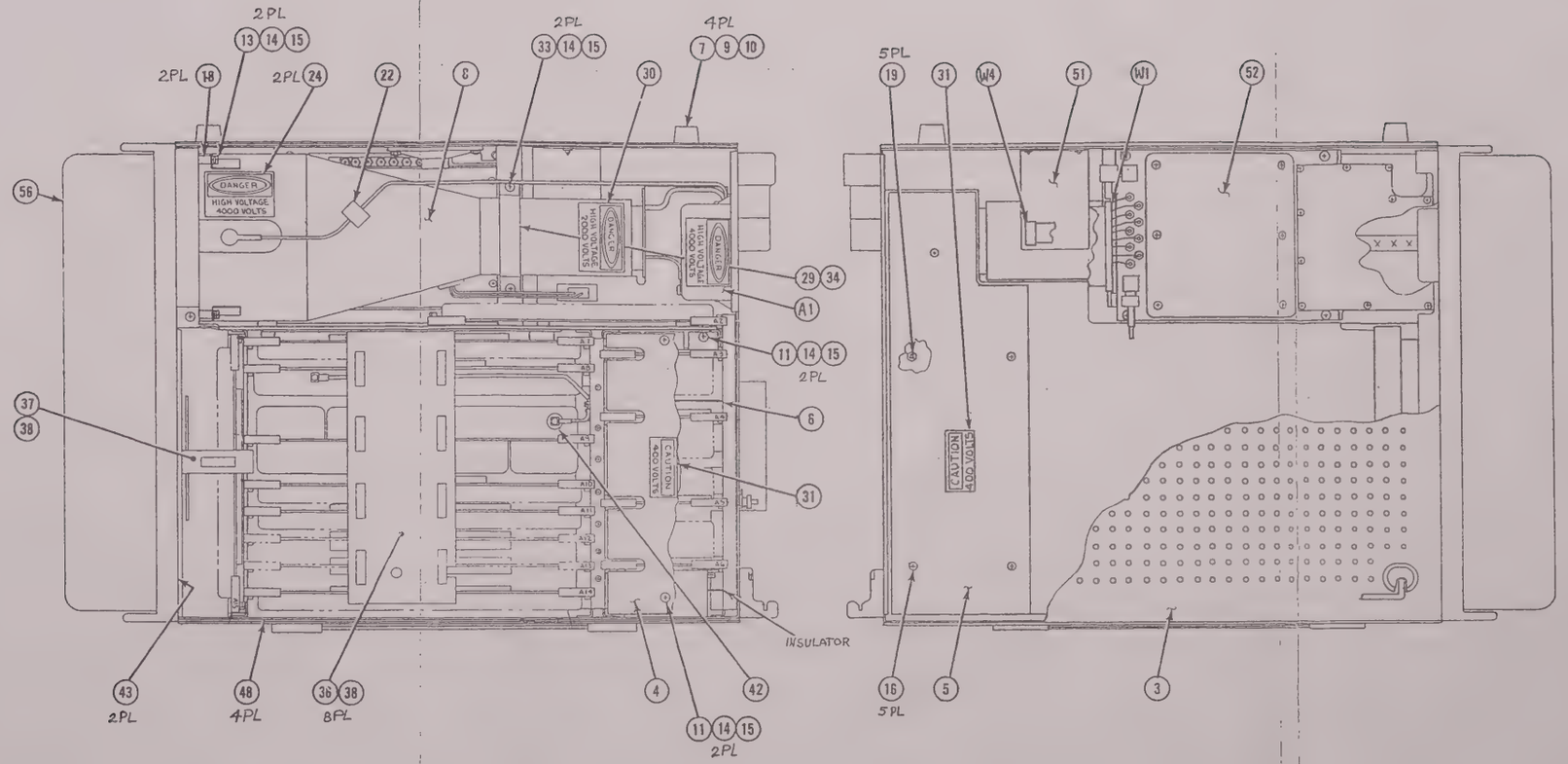


| Find No. | Qty. Req. | Part No. | Nomenclature | Part Value |
|---|---|---|---|---|
| 002 | 1 | 01-80341B34 | COVER ASSEMBLY,TOP | |
| 003 | 1 | 01-80341B29 | COVER ASSEMBLY,BOTTOM | |
| 004 | 1 | 15-803708A98 | COVER, LOW VOLTAGE | |
| 005 | 1 | 26-P22206E1 | SHIELD, MOTHERBOARD | |
| 006 | 1 | 14-80370A87 | INSULATOR | |
| 007 | 4 | 75-80342B26 | FOOT | |
| 008 | 1 | 01-80375B01 | CRT ASSEMBLY | |
| 009 | 4 | 05-80375B44 | RIVET | |
| 010 | 4 | 04-7507 | WASHER | |
| 011 | 4 | 03-139749 | SCREW | .138-32X.250 |
| 012 | 10 | 03-80341B37 | SCREW,PH ASSEMBLED WASHER | |
| 013 | 2 | 03-136172 | SCREW | .138-32X.750 |
| 014 | 8 | 04-114441 | WASHER | .156 |
| 015 | 8 | 04-80375B47 | WASHER, LOCK #8 | .138 |
| 016 | 5 | 03-138374 | SCREW | .112-40X.187 |
| 017 | 4 | 03-139461 | SCREW | .112-40X.250 |
| 018 | 2 | 43-80343B73 | SPACER | |
| 019 | 5 | 03-80343B76 | STANDOFF | |
| 022 | AR | 11-14348A06 | INSULATION TAPE 1" YELLOW | |
| 024 | 2 | 33-P22377E1 | LABEL | |
| 029 | 1 | 42-80375B17 | CLAMP, CRT | |
| 030 | 1 | 33-P22378E1 | LABEL | |
| 031 | 1 | 33-P22379E1 | LABEL | |
| 033 | 2 | 03-139784 | SCREW | .138-32X.438 |
| 034 | 1 | 42-80375B12 | PAD, CRT CLAMP | |
| 036 | 1 | 42-80375B18 | RETAINER, CARD | |
| 037 | 1 | 42-80375B19 | RETAINER, FRTPNL INT | |
| 038 | 9 | 75-80375B28 | CUSHION, CARD RETAINER | |
| 040 | 4 | 04-80335A99 | WASHER | .156 |
| 042 | AR | 32-80344B89 | GASKET, CONNECTOR | |
| 043 | AR | 32-8J344B91 | GASKET, MESH | |
| 048 | AR | 32-80344B90 | GASKET, MESH | |
| 051 | 1 | 67-P22036E1 | KIT, TCXO TIMEBASE | |
| 052 | 1 | 67-P22047E1 | KIT, STD RF INPUT | |
| A 001 | 1 | RTP-1007A | HI VOLT PWR SPLY ASSY(A1) | |
| A 002 | 1 | RTC-1005A | SCOPE AMPL.BD ASSY(A2) | |
| A 003 | 1 | RTP-1008A | BATTERY CHARGER ASSY(A3) | |
| A 004 | 1 | RTP-1009A | PWB ASSY,CONTROL BD(A4) | |
| A 005 | 1 | RTP-1010A | PWB ASSY,OUTPUT BD(A5) | |
| A 006 | 1 | RTP-1011A | SWITCHER ASSY(A6) | |
| A 007 | 1 | RTC-1006A | SCOPE/DVM CON.BD ASSY(A7) | |
| A 008 | 1 | RTL-1019A | RECEIVER ASSY(A8) | |
| A 009 | 1 | RTC-1007A | SYNTHESIZER ASSY(A9) | |
| A 010 | 1 | RTC-1008A | AUDIO SYNTH ASSY(A10) | |
| A 011 | 1 | RTC-1009A | PROC.INTERFC BD ASSY(A11) | |
| A 014 | 1 | RTC-1010A | MICROPRESSOR ASSY(A14) | |
| A 015 | 1 | RTC-1011A | FR.PANEL INTRFC ASSY(A15) | |
| P 001 | 1 | 09-80343B57 | CONNECTOR | |
| P 002 | 1 | 09-80343B56 | CONNECTOR | |
| P 003 | 1 | 28-80343B47 | CONNECTOR | |
| W 001 | 1 | 30-80344B15 | CABLE ASSEMBLY | |
| W 004 | 1 | 30-80344B15 | CABLE ASSEMBLY | A16J16 TO A19J16 |

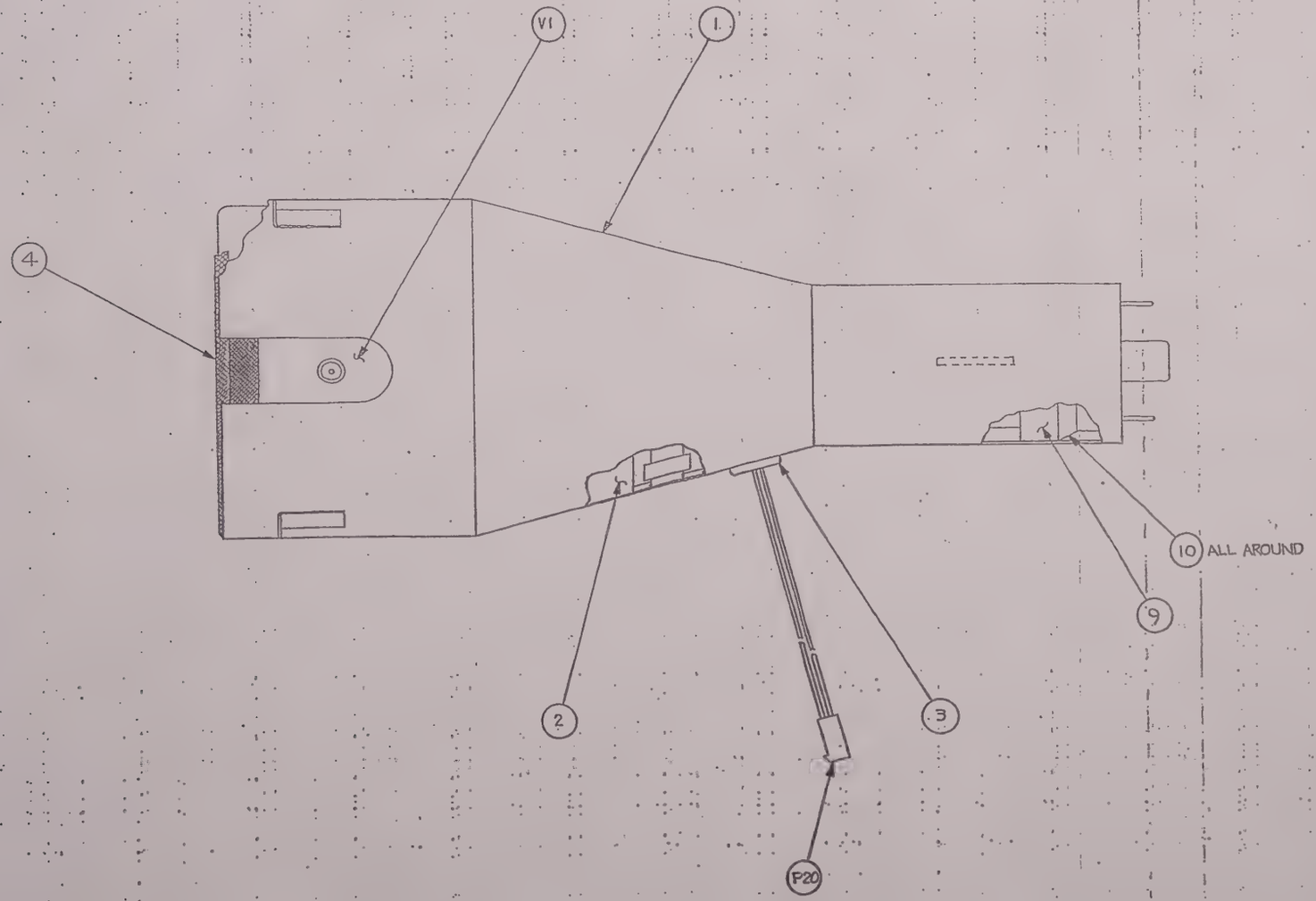


## CRT ASSEMBLY

| Find No. | Qty. Req. | Part No. | Nomenclature | Part Value |
|---|---|---|---|---|
| 001 | 1 | 25-P0796V1 | SHIELD, CRT | |
| 002 | 1 | 75-80335A51 | ISOLATOR, FRONT CRT | |
| 003 | 1 | 05-10375B49 | GROMMET | |
| 004 | AR | 30-80370A49 | WIRE MESH, KNITTED | |
| 009 | 1 | 75-80335A51 | ISOLATOR, REAR CRT | |
| 010 | AR | 11-14348A08 | INSULATION TAPE 1" YELLOW | |
| P 020 | 1 | 33-80375B23 | HOUSING, CONTACT | |
| V 001 | 1 | 95-80396A98 | CATHODE RAY TUBE | |

*Figure 5-4. Assembly and Parts*

*Figure 5-5. Assembly and Parts List*

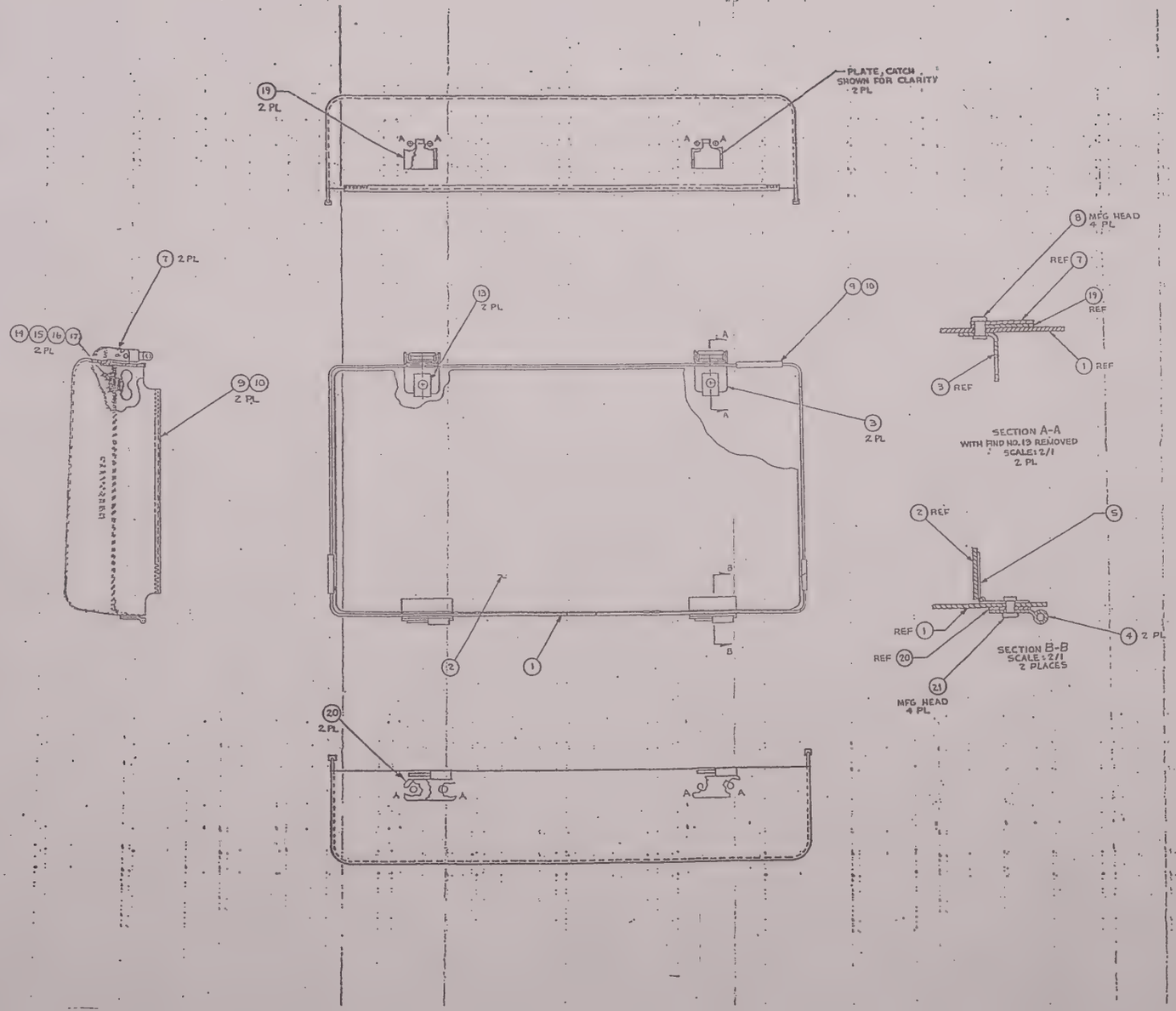


FRONT COVER

| Find No. | Qty. Req. | Part No. | Nomenclature | Part Value |
|---|---|---|---|---|
| 001 | 1 | 15-80344867 | COVER, FRONT | |
| 002 | 1 | 15-80375807 | PARTITION | |
| 003 | 2 | 07-80375808 | BRACKET | |
| 004 | 2 | 55-80335A90 | STOCKER, TAKE-APART HINGE | |
| 005 | AR | 55-80340849 | HINGE, BUTT | |
| 007 | 2 | 55-80340876 | CATCH, ONLY | |
| 008 | 4 | 05-80375846 | RIVET | .156X.438 |
| 009 | AR | 05-80375839 | GROMMET, NYLON BLACK | |
| 013 | 2 | 55-80343869 | RECEPTACLE, CLIP-ON | |
| 014 | 2 | 55-80343866 | STUD | |
| 015 | 2 | 04-80343868 | WASHER | |
| 016 | 2 | 41-80375820 | SPRING, EJECTOR | |
| 017 | 2 | 42-80343867 | RETAINER, SPLIT RING | |
| 019 | 2 | 43-80342828 | SPACER, CATCH | |
| 020 | 2 | 43-80342829 | SPACER, HINGE | |
| 021 | 4 | 05-80375845 | RIVET | .125X.375 |

# SECTION 6.
# HIGH-VOLTAGE POWER SUPPLY (A1)

## 6.1 DESCRIPTION

The High-Voltage Power Supply provides the CRT with bias and drive voltages. The power supply converts a nominal input voltage of 12.4 Vdc to output voltages of +4 kV and −2 kV. This power supply also contains control circuits for the CRT focus and intensity grids.

**WARNING**

The System Analyzer uses voltages of +4 kV and −2 kV in the High-Voltage Power Supply (A1) and near the cathode ray tube (CRT). Handle this monitor with extreme care to avoid electrical shock.

A wirelist of the High-Voltage Power Supply is shown at the end of this section in Table 6-1, a block diagram in Figure 6-1, a schematic in Figure 6-2, the printed wiring board assembly and parts list in Figure 6-3, and the assembly and parts list in Figure 6-4.

## 6.2 THEORY OF OPERATION

### 6.2.1 VOLTAGE REGULATION CIRCUIT

At the center tap of the high-voltage transformer, the chopper switches 9 Vdc through the transformer primary winding at the rate of 20 kHz. The drive signals for the chopper originate in the Low-Voltage Power Supply's Control board (A4). One secondary transformer winding provides a CRT-heater voltage of 6.3 Vac. The other transformer winding provides 1 kV, which is then doubled to 2 kV. This voltage is regulated by comparing a reference voltage of 6.3V to a voltage divider placed across the 2-kV output. The resultant signal controls the level of the dc input at the center tap of the high-voltage transformer.

### 6.2.2 MULTIPLIERS

The 1-kV secondary winding is multiplied by 4 and by 2. The output of the ×4 multiplier, a nominal +4.25 kV, is the CRT-anode voltage. The output of the ×2 multiplier, a nominal −2 kV, provides the cathode voltage and is applied to the intensity and focus modulators.

### 6.2.3 INTENSITY MODULATOR

The intensity modulator controls the grid voltage, with the control range set by VR1. The intensity modulator has two paths: one for low frequency and one for high frequency. The low-frequency path is the INTENSITY TRACKING VOLTAGE (TV), which drives the grid via an opto-isolator. This INTENSITY TV signal results from the comparison of the intensity sample signal and the high-voltage reference on the Scope Amplifier board (A2). The high-frequency path is the CRT Z-axis, which is capacitively coupled to the CRT grid.

### 6.2.4 FOCUS MODULATOR

In response to the focus TV input signal, the focus modulator controls the focus voltage. The control range is set by resistor R5 in the bias divider. The focus TV signal drives the focus grid via an opto-isolator.

### 6.2.5 TRANSIENT PROTECTOR (A1A2)

The Transient Protector provides over-voltage protection for the CRT's vertical and horizontal deflection plates. Figure 6-5 at the end of the section shows the assembly and parts list of the Transient Protector.

Table 6-1. Wirelist for the High-Voltage Power Supply

| 1 | 2 | | 3 | 4 | 5 | 6 | 7 | 8 | 9 |
|---|---|---|---|---|---|---|---|---|---|
| WIRE NO. | COLOR | SIZE AWG | WIRE RUNS FROM | NOTE OR VIEW | TO | NOTE OR VIEW | FUNCTION ROUTING REMARKS | APPROX LENGTH INCHES | USE FIND NO. |
| | White | | A1A2 P2-1 | | A1A1 T1-4 | | | 10.5 | 4 |
| | White | | A1A2 P2-2 | | A1A1 P2-2 | | | 10.5 | 4 |
| | White | | A1A2 P2-3 | | A1A1 P2-3 | | | 11 | 4 |
| | White | | A1A2 P2-4 | | A1A1 P2-4 | | | 11.5 | 4 |
| | White | 24 | A1A2 P2-5 | | A1A1 P2-5 | | | 12.5 | 5 |
| | White | 24 | A1A2 P2-6 | | A1A1 P2-6 | | | 13 | 5 |
| | White | 24 | A1A2 P2-7 | | A1A1 P2-7 | | | 13 | 5 |
| | White | 22 | A1A2 P2-8 | | A1A2 8 | | | 1 | 2 |
| | White | 22 | A1A2 P2-9 | | A1A2 9 | | | 1 | 2 |
| | White | 22 | A1A2 P2-10 | | A1A2 10 | | | 1 | 2 |
| | White | 22 | A1A2 P2-11 | | A1A2 11 | | | 1 | 2 |
| | White | | A1A2 P2-14 | | A1A1 T1-5 | | | 10.5 | 4 |
| | White | 24 | A1A2 P2-1 | | A1A2 P2-2 | | | 1.5 | 5 |
| | White | 22 | A1A2 2 | | P3-2 | | | 11 | 2 |
| | White | 22 | A1A2 3 | | P3-3 | | | 12 | 2 |
| | White | 22 | A1A2 4 | | P3-4 | | | 11.75 | 2 |
| | White | 22 | A1A2 5 | | P3-5 | | | 13 | 2 |
| | White | 16 | A1A2 7 | | | | | 4 | 3 |

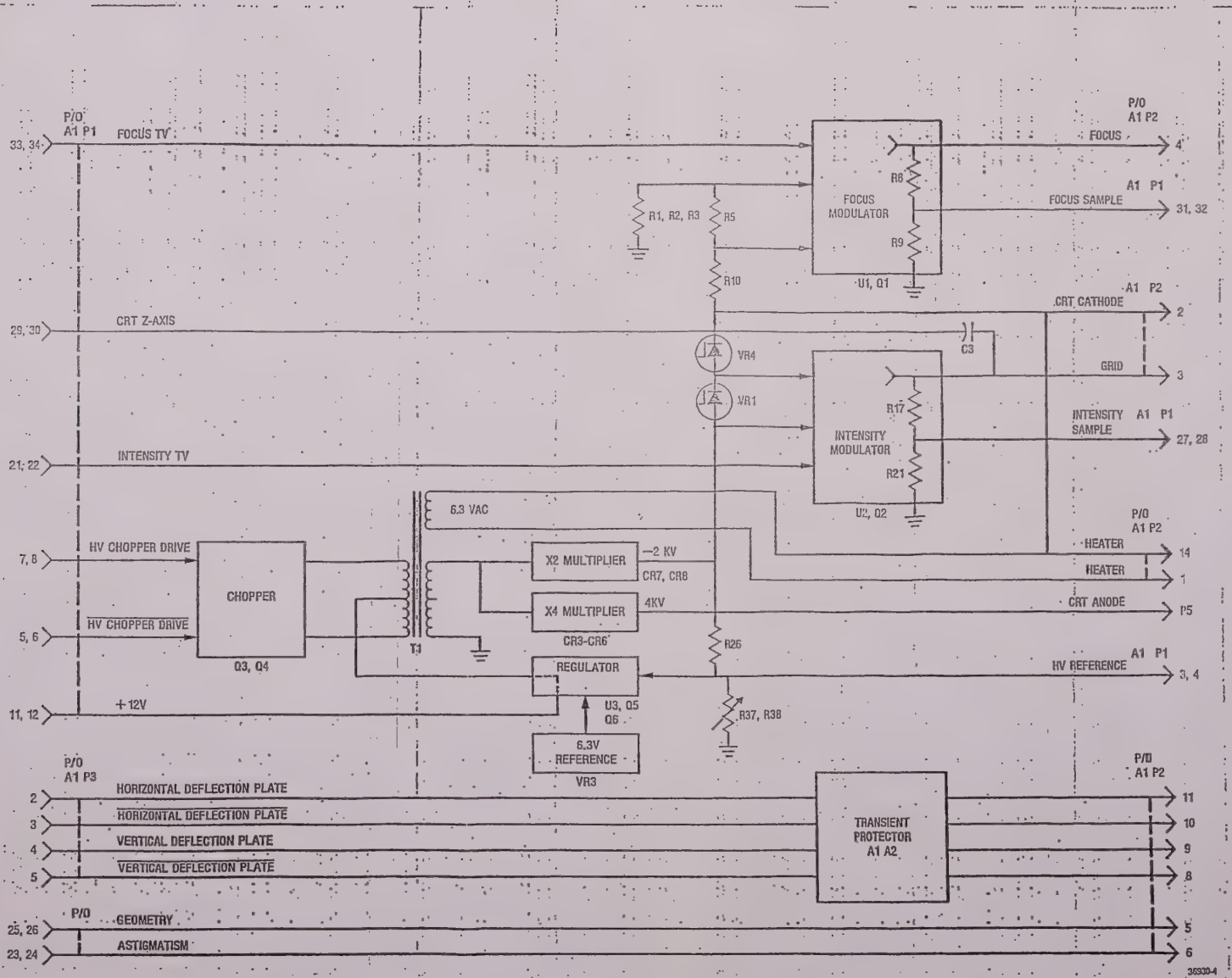


**HIGH-VOLTAGE POWER SUPPLY (A1)**
(RTP-1007A)
*Figure 6-1. Block Diagram*

# HIGH-VOLTAGE POWER SUPPLY (A1)

(RTP-1007A)

*Figure 6-2. Schematic*

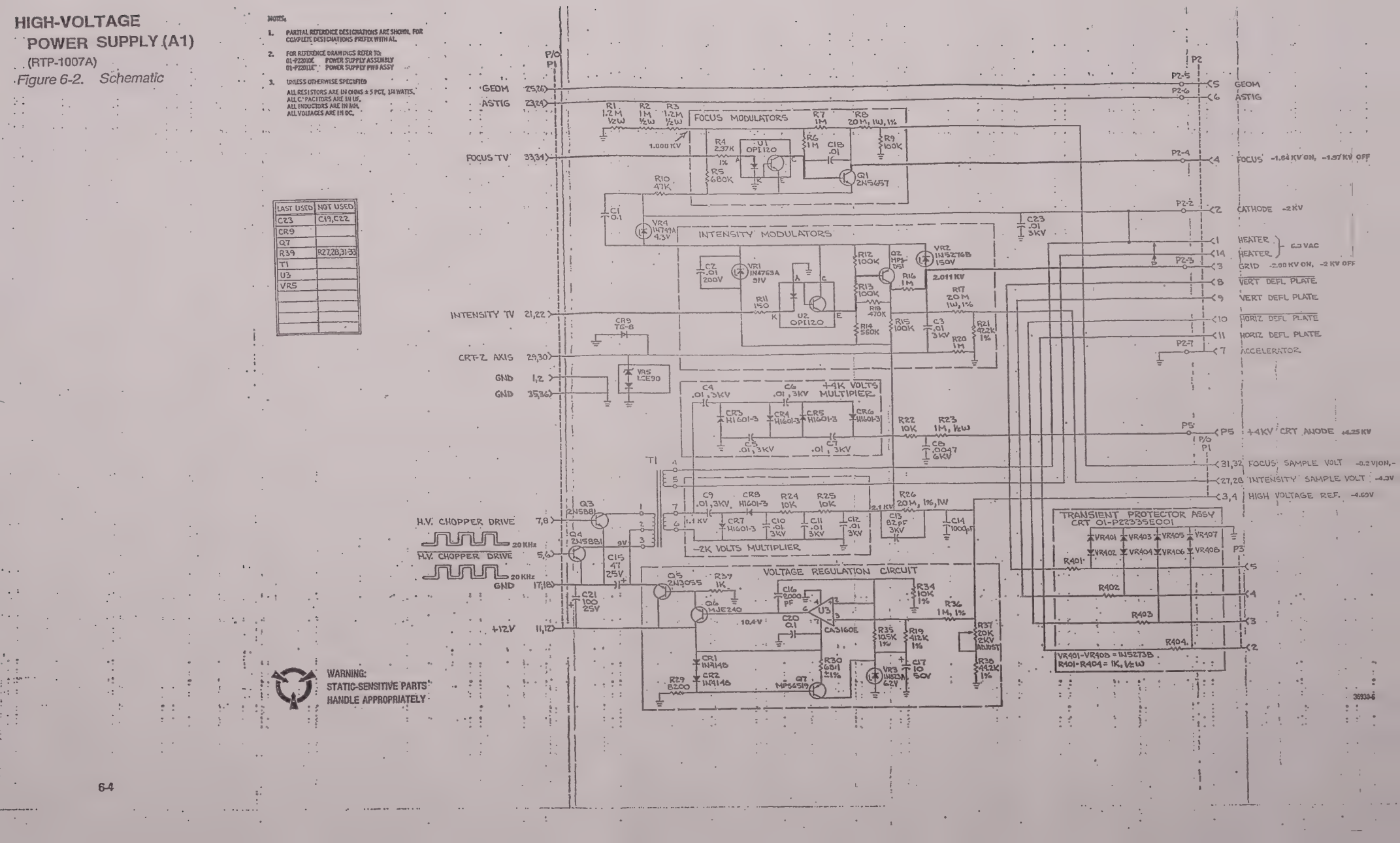

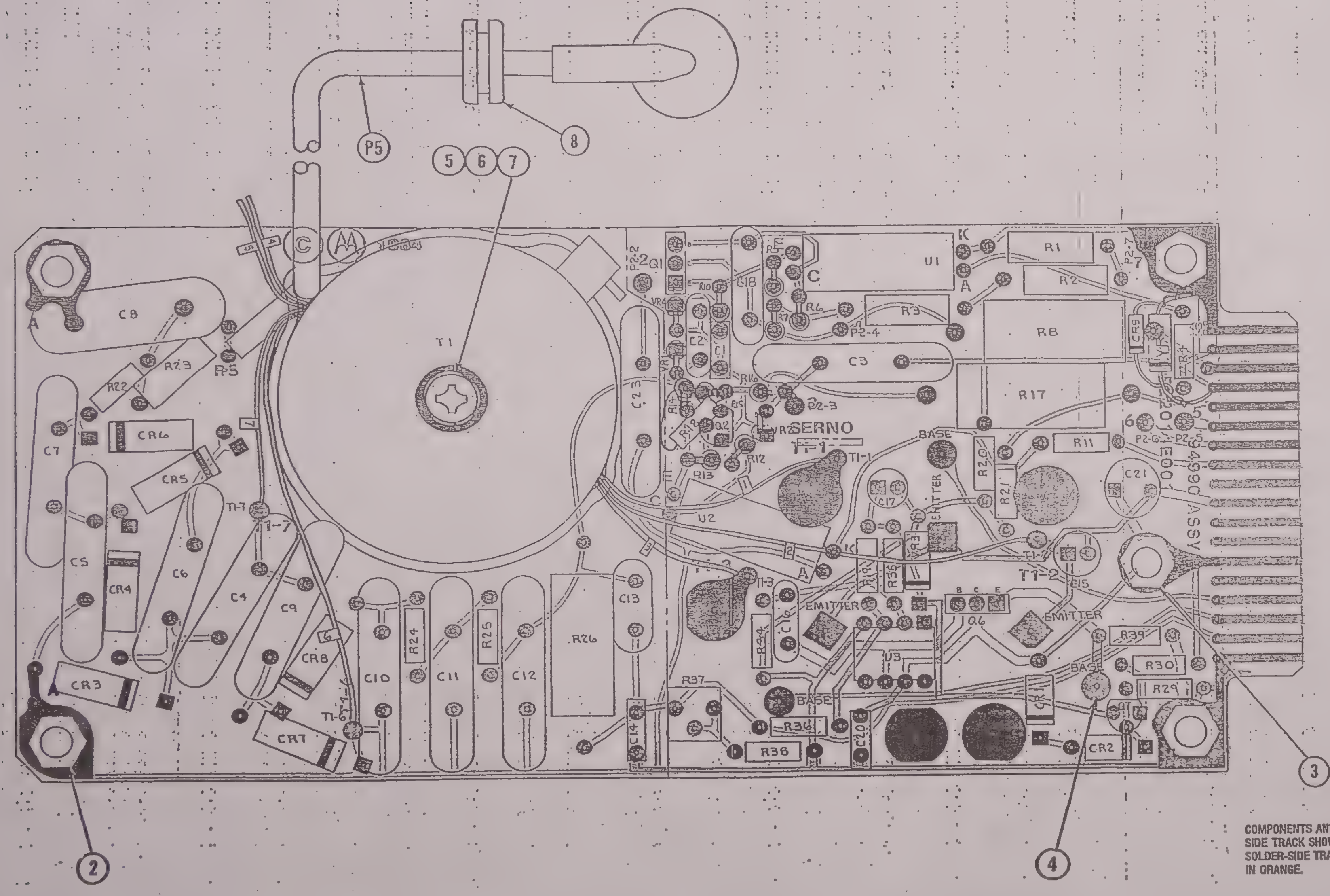


COMPONENTS AND COMPONENT-SIDE TRACK SHOWN IN BLACK; SOLDER-SIDE TRACK SHOWN IN ORANGE.

## HIGH-VOLTAGE POWER SUPPLY (A1A1)
RTP-1007A

| Find No. | Qty. Reg. | Part No. | Nomenclature | Part Value |
|---|---|---|---|---|
| 002 | 1 | 02-14048A02 | NUT (HOUSING) | |
| 003 | 6 | 43-80375B32 | SPACER, SWAGE | |
| 004 | 6 | 09-80375B22 | RECEPTACLE, COMPONENT | |
| 005 | 1 | 03-124805 | SCREW | .138-32X1.375 |
| 006 | 1 | 04-114441 | WASHER | .156 |
| 007 | 1 | 02-80340B72 | NUT, CLINCH | 6-32 |
| 008 | 1 | 05-80375B48 | GROMMET, RUBBER | |
| C001 | 1 | 21-80342B10 | CAPACITOR | .1UF-20-50 |
| C002 | 1 | 21-80396A52 | CAPACITOR, CERAMIC DISC | .01UF-20+80-200 |
| C003 | 1 | 21-80343B45 | CAPACITOR | .01UF+80-20-3KV |
| C004 | 1 | 21-80343B45 | CAPACITOR | .01UF+80-20-3KV |
| C005 | 1 | 21-80343B45 | CAPACITOR | .01UF+80-20-3KV |
| C006 | 1 | 21-80343B45 | CAPACITOR | .01UF+80-20-3KV |
| C007 | 1 | 21-80343B45 | CAPACITOR | .01UF+80-20-3KV |
| C008 | 1 | 21-80369A80 | CAPACITOR | .0047-6000 |
| C009 | 1 | 21-80343B45 | CAPACITOR | .01UF+80-20-3KV |
| C010 | 1 | 21-80343B45 | CAPACITOR | .01UF+80-20-3KV |
| C011 | 1 | 21-80343B45 | CAPACITOR | .01UF+80-20-3KV |
| C012 | 1 | 21-80343B45 | CAPACITOR | .01UF+80-20-3KV |
| C013 | 1 | 21-80343B44 | CAPACITOR | 82PF-3KV |
| C014 | 1 | 21-80341B92 | CAPACITOR | 1000PF-10-100 |
| C015 | 1 | 23-80341B13 | CAPACITOR | 47UF-20-25 |
| C016 | 1 | 21-82428B36 | CAPACITOR | 2000PF-10-200 |
| C017 | 1 | 23-80341B15 | CAPACITOR | 10UF-20-50 |
| C018 | 1 | 21-82428B19 | CAPACITOR | .01UF-10-500 |
| C020 | 1 | 21-80342B10 | CAPACITOR | .1UF-20-50 |
| C021 | 1 | 23-84665F03 | CAPACITOR | 100UF-20-25 |
| C023 | 1 | 21-80343B45 | CAPACITOR | .01UF+80-20-3KV |
| CR001 | 1 | 48-84463K02 | DIODE | |
| CR002 | 1 | 48-84463K02 | DIODE | |
| CR003 | 1 | 48-80339B90 | DIODE | |
| CR004 | 1 | 48-80339B90 | DIODE | |
| CR005 | 1 | 48-80339B90 | DIODE | |
| CR006 | 1 | 48-80339B90 | DIODE | |
| CR007 | 1 | 48-80339B90 | DIODE | |
| CR008 | 1 | 48-80339B90 | DIODE | |
| CR009 | 1 | MUR180 | DIODE | 800V, FAST RECOVERY |
| P005 | 1 | 30-80343B89 | CABLE | HIGH VOLTAGE |
| Q001 | 1 | 48-00869747 | TRANSISTOR | |
| Q002 | 1 | 48-80340B88 | TRANSISTOR | MPSD51 |
| Q006 | 1 | 48-80368A87 | TRANSISTOR | |
| Q007 | 1 | 48-80340B85 | TRANSISTOR | MPS6519 |
| R001 | 1 | 06-00125B24 | RESISTOR | 1.2M-5 1/2 |
| R002 | 1 | 06-11045B22 | RESISTOR | 1M-5 1/2 |
| R003 | 1 | 06-00125B24 | RESISTOR | 1.2M-5 1/2 |
| R004 | 1 | 06-10621C31 | RESISTOR | 2.37K-1-1/4 |
| R005 | 1 | 06-11009D18 | RESISTOR | 680K-5-1/4 |
| R006 | 1 | 06-11009D22 | RESISTOR | 1M-5-1/4 |
| R007 | 1 | 06-11009D22 | RESISTOR | 1M-5-1/4 |
| R008 | 1 | 06-80331A37 | RESISTOR | 20M-1-1 |
| R009 | 1 | 06-11009C97 | RESISTOR | 100K-5-1/4 |
| R010 | 1 | 06-11009C89 | RESISTOR | 47K-5-1/4 |
| R011 | 1 | 06-11009C29 | RESISTOR | 150-5-1/4 |
| R012 | 1 | 06-11009C97 | RESISTOR | 100K-5-1/4 |
| R013 | 1 | 06-11009C97 | RESISTOR | 100K-5-1/4 |
| R014 | 1 | 06-11009D16 | RESISTOR | 560K-5-1/4 |
| R015 | 1 | 06-11009C97 | RESISTOR | 100K-5-1/4 |
| R016 | 1 | 06-11009D22 | RESISTOR | 1M-5-1/4 |
| R017 | 1 | 06-80331A37 | RESISTOR | 20M-1-1 |
| R018 | 1 | 5043CX470K0J | RESISTOR | 470K-5-1/4 |
| R019 | 1 | 06-10621E48 | RESISTOR | 412K-1-1/4 |
| R020 | 1 | 06-11009D22 | RESISTOR | 1M-5-1/4 |
| R021 | 1 | 06-10621D52 | RESISTOR | 42.2K-1-1/4 |
| R022 | 1 | 06-11009C73 | RESISTOR | 10K-5-1/4 |
| R023 | 1 | 06-11045B22 | RESISTOR | 1M-5-1/2 |
| R024 | 1 | 06-11009C73 | RESISTOR | 10K-5-1/4 |
| R025 | 1 | 06-11009C73 | RESISTOR | 10K-5-1/4 |
| R026 | 1 | 06-80331A37 | RESISTOR | 20M-1-1 |
| R029 | 1 | 06-11009C71 | RESISTOR | 8.2K-5-1/4 |
| R030 | 1 | 06-10621D72 | RESISTOR | 68.1-1-1/4 |
| R034 | 1 | 06-10621C91 | RESISTOR | 10K-1-1/4 |
| R035 | 1 | 06-10621C93 | RESISTOR | 10.5K-1-1/4 |
| R036 | 1 | 06-10621E85 | RESISTOR | 1M-1-1/4 |
| R037 | 1 | 18-83452F16 | RESISTOR, VARIABLE | 20K |
| R038 | 1 | 06-10621D54 | RESISTOR | 44.2K-1-1/4 |
| R039 | 1 | 06-11009C49 | RESISTOR | 1K-5-1/4 |
| T001 | 1 | 25-80342B54 | TRANSFORMER | |
| U001 | 1 | 51-80396A14 | INTEGRATED CIRCUIT | OPI120 SCREENED |
| U002 | 1 | 51-80396A14 | INTEGRATED CIRCUIT | OPI120 SCREENED |
| U003 | 1 | 51-80345A02 | INTEGRATED CIRCUIT | CA3160E SCREENED |
| VR001 | 1 | 48-80372B63 | DIODE | 91V-5-1 |
| VR002 | 1 | 48-80345A87 | DIODE, ZENER | 150V-5-5 |
| VR003 | 1 | 48-80368A98 | DIODE, ZENER | 6.2V-5-4 |
| VR004 | 1 | 48-83461E13 | DIODE, ZENER | 4.3V-5-5 |
| VR005 | 1 | LCE90 | DIODE, ZENER | 90V-1W |

## HIGH-VOLTAGE POWER SUPPLY (A1A1)
(RTP-1007A)

*Figure 6-3. Printed Wiring Board Assem and Parts List*

GH-VOLTAGE
POWER SUPPLY (A1)
(RTP-1007A)

*Figure 6-4. Assembly and Parts List*

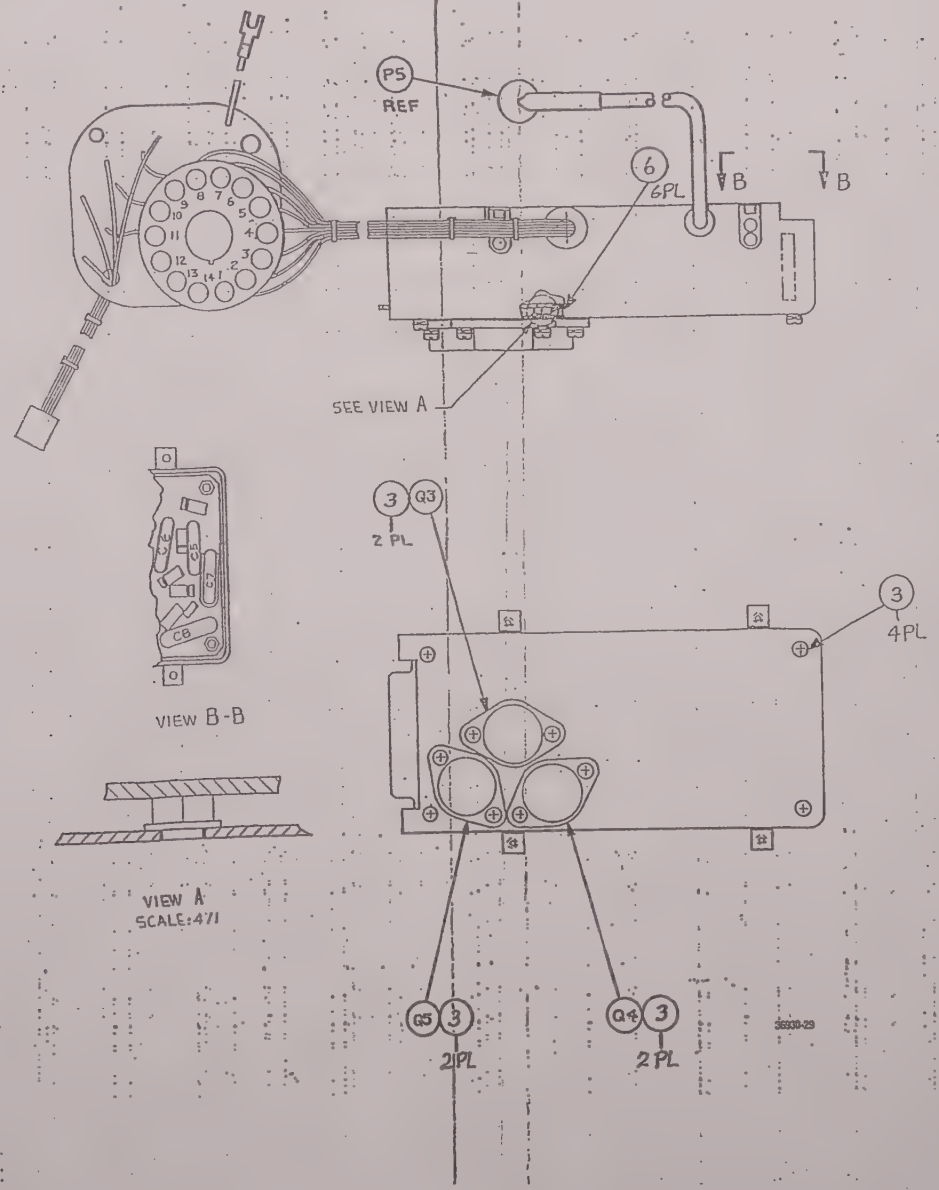


**HIGH-VOLTAGE POWER SUPPLY (A1)**
**RTP-1007A**

| Find No. | Qty. Req. | Part No. | Nomenclature | Part Value |
|---|---|---|---|---|
| 003 | 10 | 03-138148 | SCREW, PH W/CAPT LOCK WASHER | 4-40X.375 |
| 005 | 6 | 03-80375B11 | WASHER, NYLON SHOULDER | |
| Q 003 | 1 | 48-80396A25 | TRANSISTOR | |
| Q 004 | 1 | 48-80396A25 | TRANSISTOR | |
| Q 005 | 1 | 48-00869302 | TRANSISTOR | |

*Figure 6-5. Assembly and Parts List*

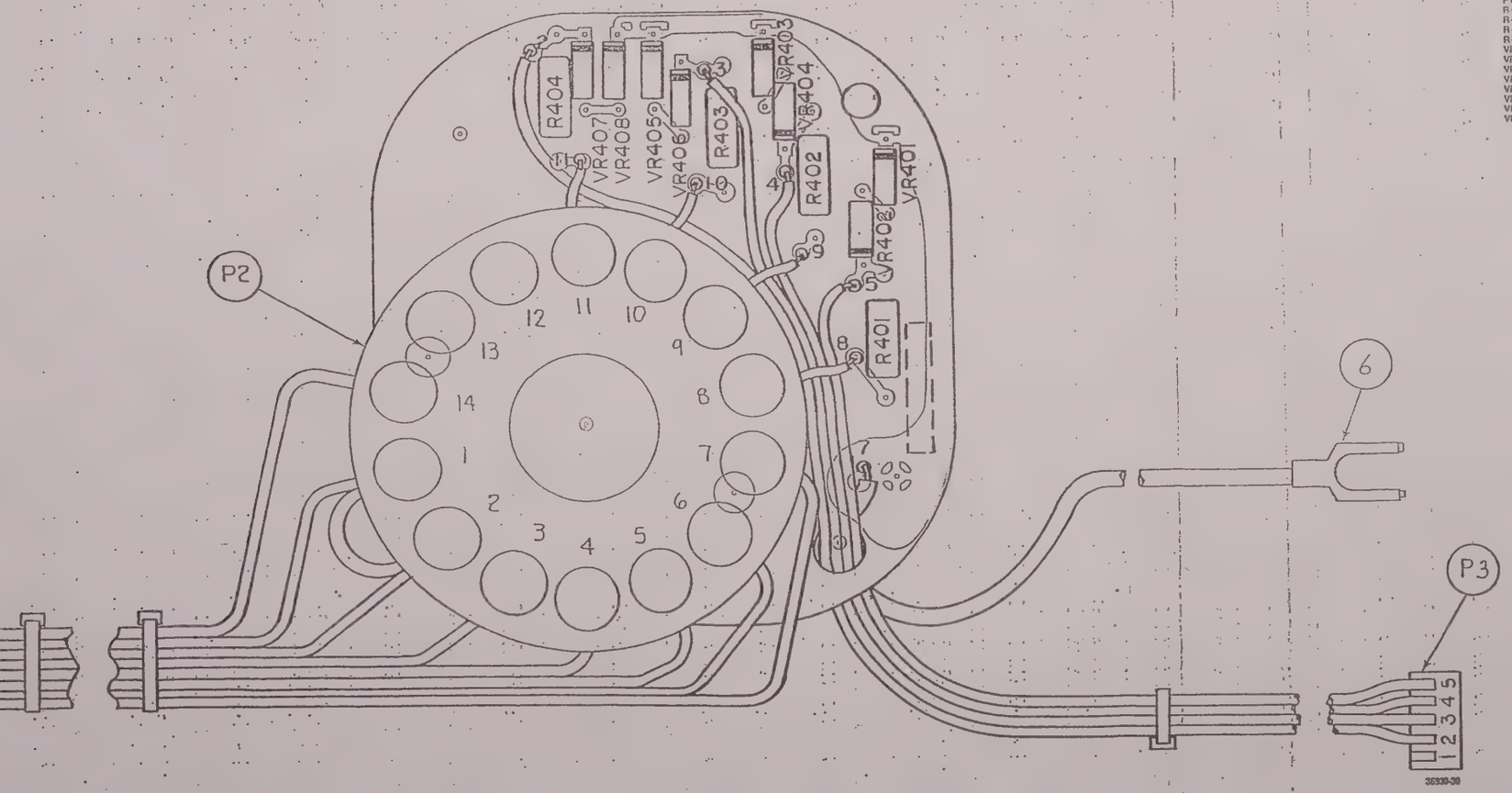


**TRANSIENT PROTECTOR (A1 A2)**

| Find No. | Qty. Req. | Part No. | Nomenclature | Part Value |
|---|---|---|---|---|
| 005 | 1 | 29-80375B14 | TERMINAL, LUG | |
| P 002 | 1 | 09-80343B74 | CONNECTOR, CRT | |
| P 003 | 1 | 09-80344B57 | CONNECTOR, FEMALE | |
| R 401 | 1 | 06-11045A49 | RESISTOR | 1000-5-1/2 |
| R 402 | 1 | 06-11045A49 | RESISTOR | 1000-5-1/2 |
| R 403 | 1 | 06-11045A49 | RESISTOR | 1000-5-1/2 |
| R 404 | 1 | 06-11045A49 | RESISTOR | 1000-5-1/2 |
| VR401 | 1 | 48-80368A95 | DIODE, ZENER | 120V-5-5 |
| VR402 | 1 | 48-80368A95 | DIODE, ZENER | 120V-5-5 |
| VR403 | 1 | 48-80368A95 | DIODE, ZENER | 120V-5-5 |
| VR404 | 1 | 48-80368A95 | DIODE, ZENER | 120V-5-5 |
| VR405 | 1 | 48-80368A95 | DIODE, ZENER | 120V-5-5 |
| VR406 | 1 | 48-80368A95 | DIODE, ZENER | 120V-5-5 |
| VR407 | 1 | 48-80368A95 | DIODE, ZENER | 120V-5-5 |
| VR408 | 1 | 48-80368A95 | DIODE, ZENER | 120V-5-5 |

# SECTION 7.
# SCOPE AMPLIFIER BOARD (A2)

## 7.1 DESCRIPTION

The Scope Amplifier board contains the horizontal and vertical deflection amplifiers, the horizontal timebase generator, control circuitry for focus and intensity, and miscellaneous CRT bias adjustments.

The Scope Amplifier operates in an auto or normal mode. When a triggerable vertical signal is present, a sweep is developed in both auto and normal modes. When a triggerable signal is not present, the sweep is blanked in the normal mode and free-running in the auto mode. An external horizontal input is available at the front panel.

A block diagram of the Scope Amplifier board is shown in Figure 7-1, a schematic in Figure 7-2, and the printed wiring board assembly and parts list in Figure 7-3.

## 7.2 THEORY OF OPERATION

### 7.2.1 DEFLECTION AMPLIFIERS

The vertical and horizontal deflection amplifiers are identical. The input signal is initially amplified and split into two signals, 180 degrees out of phase. Each of these signals is then further amplified to become a CRT deflection-plate signal. The amplifiers provide 200V peak-to-peak signal capability with a frequency bandwidth of 1 MHz.

### 7.2.2 HORIZONTAL TIMEBASE GENERATOR

#### 7.2.2.1 General

The horizontal timebase generator provides calibrated sweep rates over a six-decade range from 1 µsec to 100 msec per division. Sweep-rate selection originates from the processor via the signal lines for the SCOPE SWEEP CONTROL 0-3. Vernier control over the sweep rate is generated by the sweep-vernier voltage input from the front panel.

#### 7.2.2.2 Ramp Generator

The ramp signal is developed using an integrator (U3) with a constant voltage. The sweep rate is determined by R5, R6, R7 and C3, C4, and C5. The combination of the RC network produces the six sweep rates.

#### 7.2.2.3 Blanking and Trigger Hold-Off Circuitry

When the ramp voltage reaches +2.7V, the output of U11B produces a blanking pulse which is used to short-circuit the ramp integrator and trigger the hold-off integrator (U5). The hold-off rate is determined by R19, C14, and C15. The combination of the RC network produces two hold-off times, one for msec and one for µsec. When the hold-off ramp reaches +2.7V, the output of U11A short-circuits the hold-off integrator, and the sweep generator awaits a sweep trigger.

Sweep trigger is either in auto or normal mode as selected by the AUTO/NORMAL trigger-select via the front panel. In the normal mode, U11B is always disabled, thus keeping the blanking signal high and preventing the ramp from starting until a trigger pulse is present. In the auto mode, if the SYNC PRESENT input is high, indicating no sync, the scope sweep is self-triggered. If there is a sync, the sweep will wait for a pulse on the TRIG PULSE line to start the sweep.

*NOTE*

The entry of a scope trigger delay will prevent operation of scope triggering as long as the unit is set on "MODULATION, Tone Seq."

### 7.2.3 HORIZONTAL SWITCHING

The input to the horizontal deflection amplifier is selected between two sources. The first source is the INT HORIZ IN signal line, which provides the horizontal character sweep and the horizontal spectrum-analyzer sweep. The other source is the scope-mode signal path from the horizontal positioning-summing amplifier. The scope-mode signal is the output of either the horizontal timebase generator or the EXT HORIZ INPUT from the front panel. The SCOPE MODE EN line from the processor selects either internal horizontal or scope-mode horizontal inputs. The EXT HORIZ EN line selects one of the two scope-mode signals.

### 7.2.4 Z-AXIS MODULATOR

A crossover network provides CRT Z-AXIS modulation from dc to 1 MHz. A high-pass and low-pass network on the High-Voltage Power Supply board (A1) produces a crossover frequency of 16 Hz. The Z-AXIS modulator circuit is the high-frequency modulation path, 16 Hz to 1 MHz.

The resulting CRT Z-AXIS signal is capacitively coupled on the High-Voltage Power Supply board (A1) to the CRT grid. The low-frequency path, dc to 16 Hz, is through the intensity-control circuit.

### 7.2.5 INTENSITY CONTROL

The INTENSITY LEVEL signal from the front panel control is gated with the SCOPE Z-AXIS signal by the intensity-level gate (Q6). The gated signal is summed (U25) with the HIGH VOLTAGE REF and INTENSITY SAMPLE VOLTAGE signals, to provide the INTENSITY TRACKING VOLTAGE (TV) signal. The INTENSITY TV is the low-frequency control path which drives the intensity opto-isolator in the High-Voltage Supply.

### 7.2.6 FOCUS CONTROL

The FOCUS TRACKING VOLTAGE (TV) signal is obtained by comparing the FOCUS LEVEL control line to the FOCUS SAMPLE VOLT signal. The TV signal drives an opto-isolator circuit in the High-Voltage Supply which controls the CRT focus voltage.

### 7.2.7 ASTIGMATISM, GEOMETRY, AND TRACE ROTATION

The CRT alignment controls for astigmatism, geometry and trace rotation are obtained from the respective wipers of three potentiometers. Each potentiometer is connected between supply voltages equal to the required adjustment range.

## SCOPE AMPLIFIER BOARD (A2)

(RTC-1005A)

*Figure 7-1. Block Diagram*

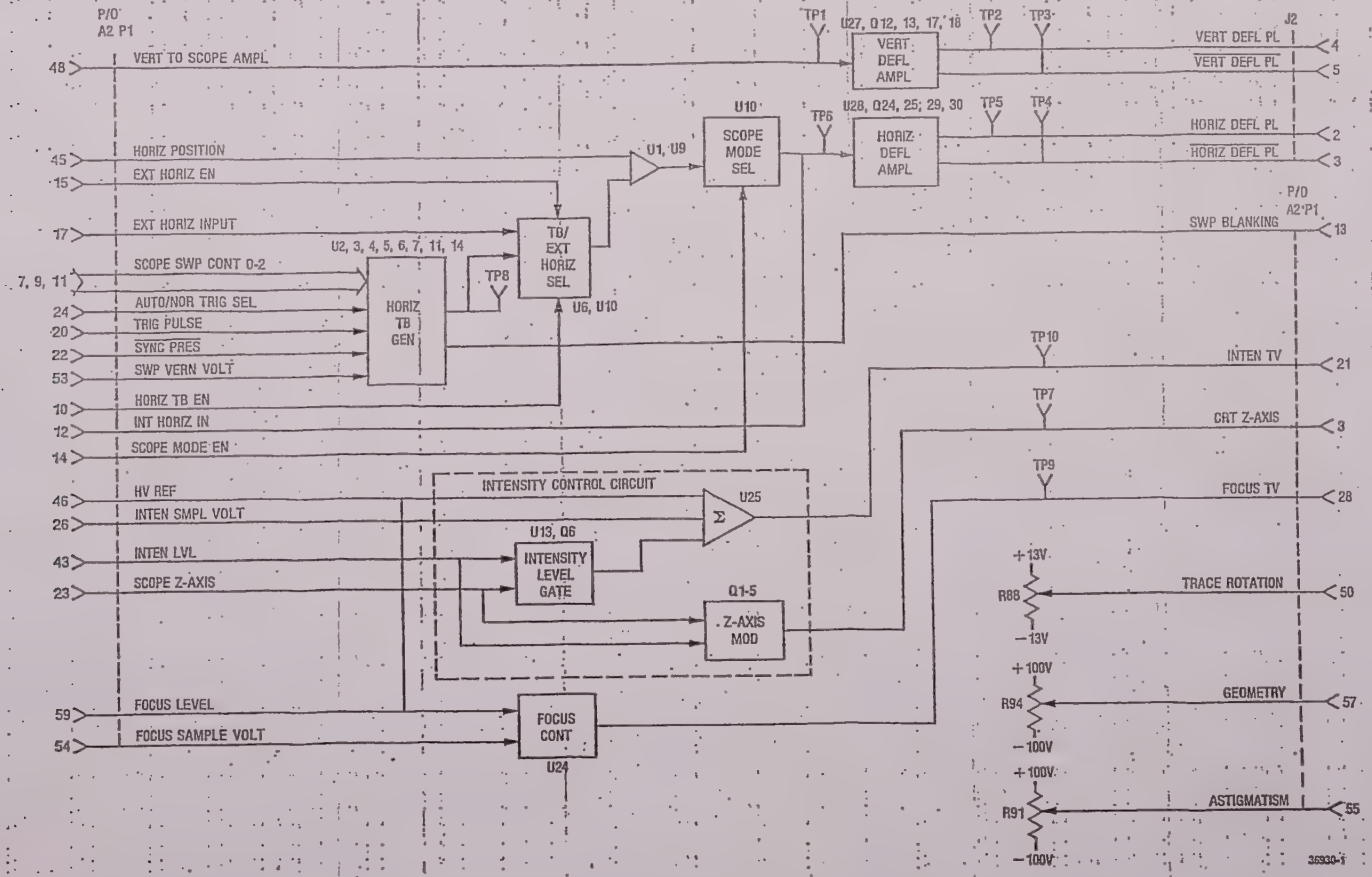

# SCOPE AMPLIFIER BOARD (A2)

(RTC-1005A)

*Figure 7-2a. Schematic (Sheet 1 of 2)*

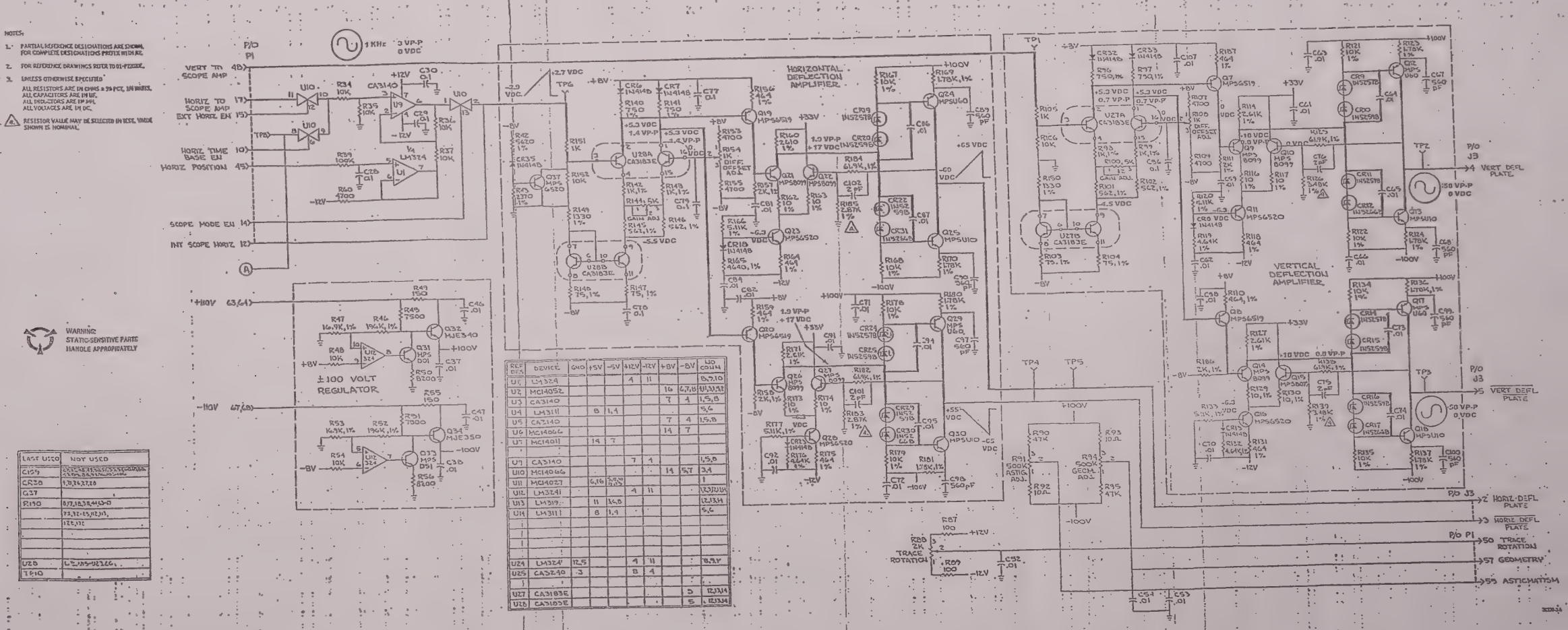


| LAST USED | NOT USED |
|---|---|
| C129 | |
| CR38 | |
| Q37 | |
| R190 | |
| | |
| | |
| | |
| | |
| U28 | |
| TP10 | |

| REF DES | DEVICE | GND | +5V | -5V | +12V | -12V | +8V | -8V | I/O COUNT |
|---|---|---|---|---|---|---|---|---|---|
| U1 | LM324 | | | | 4 | 11 | | | 8,9,10 |
| U2 | MC14052 | | | | | | 16 | 4,7,8 | 11,12,13 |
| U3 | CA3140 | | | | | | 7 | 4 | 1,5,8 |
| U4 | LM311 | | 8 | 1,4 | | | | | 5,6 |
| U5 | CA3140 | | | | | | 7 | 4 | 1,5,8 |
| U6 | MC14066 | | | | | | 14 | 7 | |
| U7 | MC14011 | | 14 | 7 | | | | | |
| U9 | CA3140 | | | | 7 | 4 | | | 1,5,8 |
| U10 | MC14066 | | | | | | 14 | 5,7 | 3,4 |
| U11 | MC14027 | | 4,16 | 8,15 | | | | | 1 |
| U12 | LM324 | | | | 4 | 11 | | | 12,13,14 |
| U13 | LM319 | | 11 | 14,8 | | | | | 12,13,14 |
| U14 | LM311 | | 8 | 1,4 | | | | | 5,6 |
| U24 | LM324 | 12,5 | | | 4 | 11 | | | 8,9,10 |
| U25 | CA3240 | 3 | | | 8 | 4 | | | |
| U27 | CA3183E | | | | | | | 5 | 12,13,14 |
| U28 | CA3183E | | | | | | | 5 | 12,13,14 |



7-4

## SCOPE AMPLIFIER BOARD (A2)

(RTC-1005A)

*Figure 7-2b. Schematic (Sheet 2 of 2)*

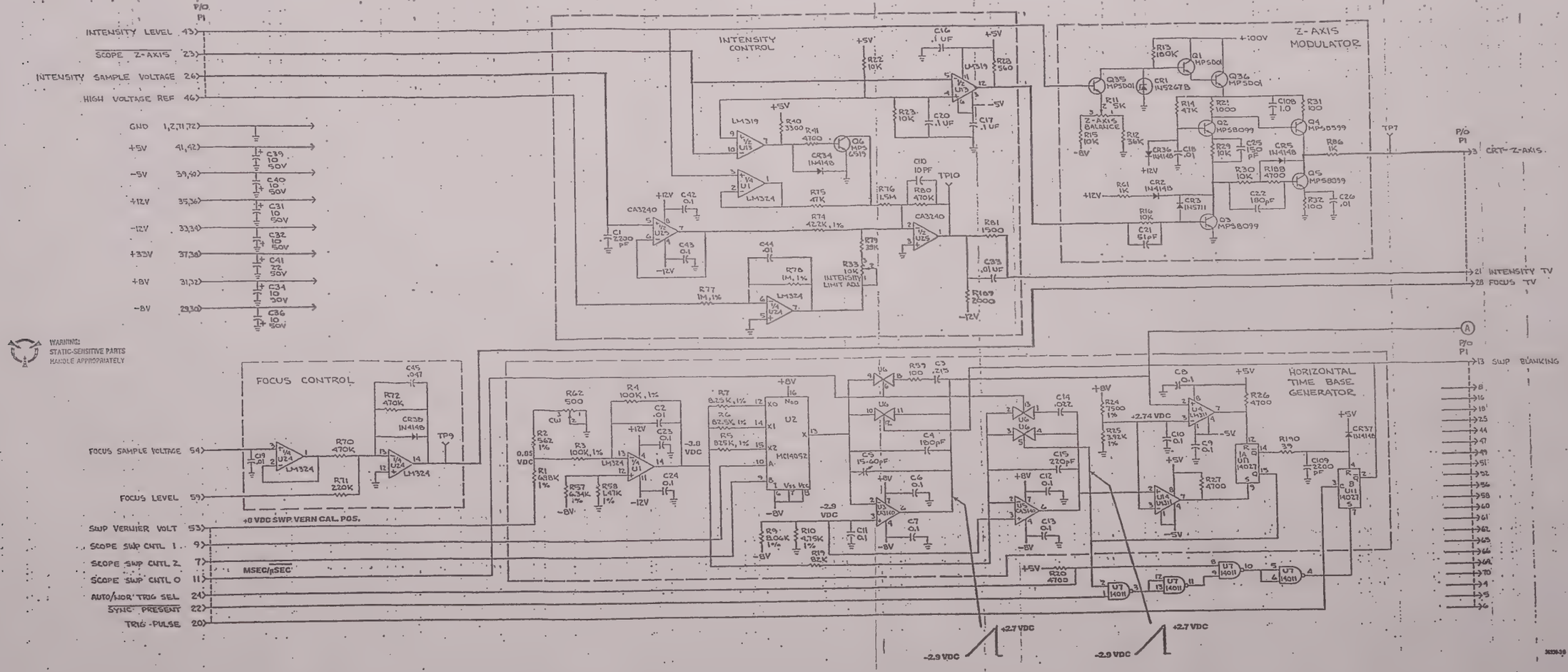


T-5/4

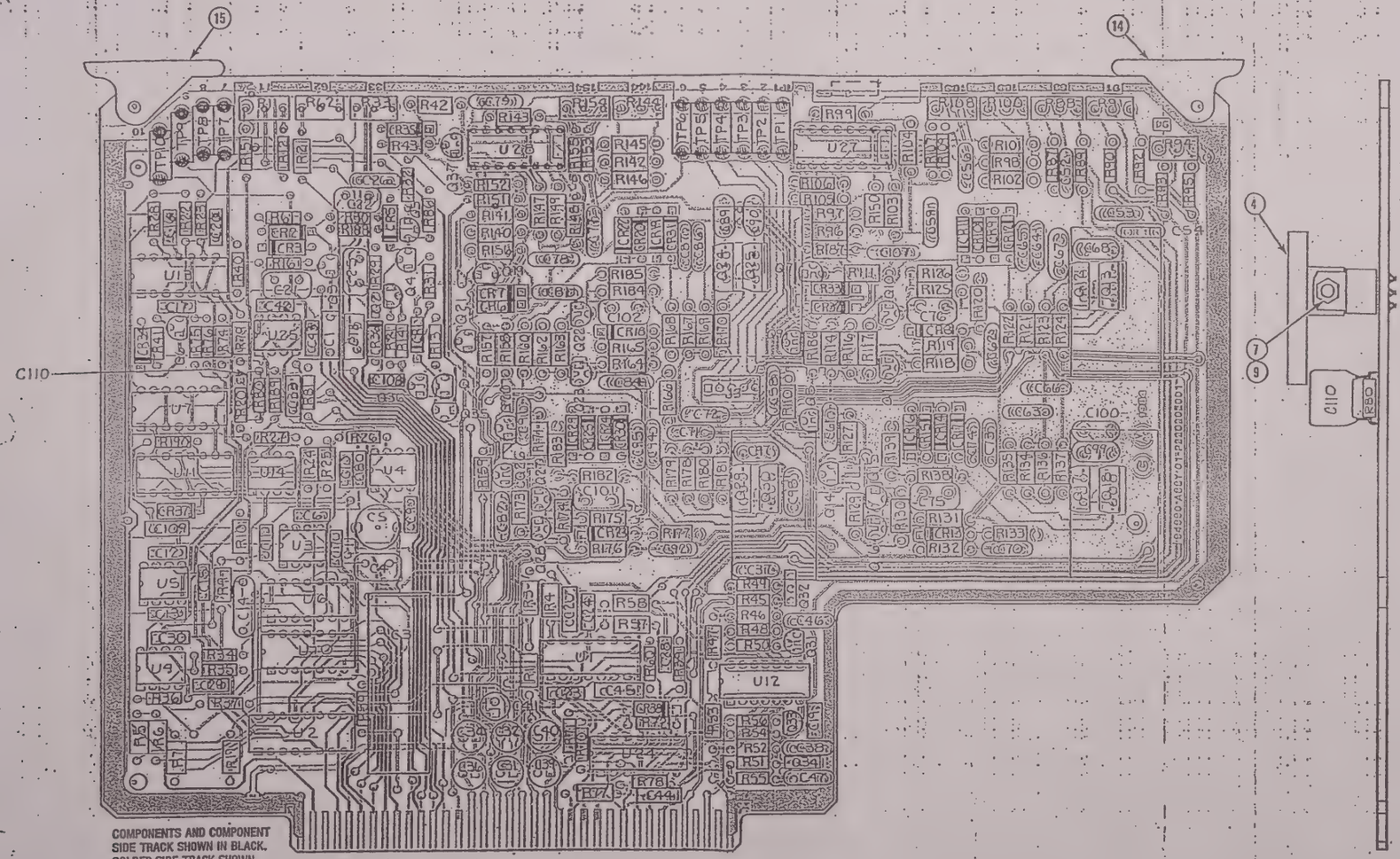


## SCOPE AMPLIFIER BOARD (A2)
RTC-1005A

| Find No. | Qty. Req. | Part No. | Nomenclature | Part Value |
|---|---|---|---|---|
| 004 | 4 | 26-80344B68 | HEATSINK | |
| 007 | 4 | 03-138148 | SCREW, PH W/CAPT LOCK WASHER | 4-40X.375 |
| 009 | 4 | 02-140125 | NUT, LIGHT HEX | .112-40 |
| 014 | 1 | 45-80339B28 | CARD EJECTOR | |
| 015 | 1 | 45-80339B35 | CARD EJECTOR | MARKED |
| C001 | 1 | 21-80372B62 | CAPACITOR | .0022UF-5-630 |
| C002 | 1 | 21-80342B09 | CAPACITOR | .01UF-20-50 |
| C003 | 1 | 08-83445B69 | CAPACITOR | .215UF-1 |
| C004 | 1 | 21-80359A95 | CAPACITOR | 180PF-5-500 |
| C005 | 1 | 23-82399D07 | CAPACITOR, VARIABLE | 15-60PF |
| C006 | 1 | 21-80342B10 | CAPACITOR | .1UF-20-50 |
| C007 | 1 | 21-80342B10 | CAPACITOR | .1UF-20-50 |
| C008 | 1 | 21-80342B10 | CAPACITOR | .1UF-20-50 |
| C009 | 1 | 21-80342B10 | CAPACITOR | .1UF-20-50 |
| C010 | 1 | 21-80342B10 | CAPACITOR | .1UF-20-50 |
| C011 | 1 | 21-80342B10 | CAPACITOR | .1UF-20-50 |
| C012 | 1 | 21-80342B10 | CAPACITOR | .1UF-20-50 |
| C013 | 1 | 21-80342B10 | CAPACITOR | .1UF-20-50 |
| C014 | 1 | 08-82096A88 | CAPACITOR | .022UF-10-250 |
| C015 | 1 | 21-80339B26 | CAPACITOR | 220PF-5-500 |
| C016 | 1 | 21-80342B10 | CAPACITOR | .1UF-20-50 |
| C017 | 1 | 21-80342B10 | CAPACITOR | .1UF-20-50 |
| C018 | 1 | 21-80342B09 | CAPACITOR | .01UF-20-50 |
| C019 | 1 | 21-80342B09 | CAPACITOR | .01UF-20-50 |
| C020 | 1 | 21-80342B10 | CAPACITOR | .1UF-20-50 |
| C021 | 1 | 21-80339B16 | CAPACITOR | 51PF-5-500 |
| C022 | 1 | 21-80359A95 | CAPACITOR | 180PF-5-500 |
| C023 | 1 | 21-80342B10 | CAPACITOR | .1UF-20-50 |
| C024 | 1 | 21-80342B10 | CAPACITOR | .1UF-20-50 |
| C025 | 1 | 21-80359A94 | CAPACITOR | 150PF-5-500 |
| C026 | 1 | 21-80396A52 | CAPACITOR,CERAMIC DISC | .01UF-20+80-200 |
| C028 | 1 | 21-80342B10 | CAPACITOR | .1UF-20-50 |
| C029 | 1 | 21-80342B10 | CAPACITOR | .1UF-20-50 |
| C030 | 1 | 21-80342B10 | CAPACITOR | .1UF-20-50 |
| C031 | 1 | 23-80341B15 | CAPACITOR | 10UF-20-50 |
| C032 | 1 | 23-80341B15 | CAPACITOR | 10UF-20-50 |
| C033 | 1 | 21-80342B09 | CAPACITOR | .01UF-20-50 |
| C034 | 1 | 23-80341B15 | CAPACITOR | 10UF-20-50 |
| C035 | 1 | 23-80341B15 | CAPACITOR | 10UF-20-50 |
| C037 | 1 | 21-80396A52 | CAPACITOR,CERAMIC DISC | .01UF-20+80-200 |
| C038 | 1 | 21-80396A52 | CAPACITOR,CERAMIC DISC | .01UF-20+80-200 |
| C039 | 1 | 23-80341B15 | CAPACITOR | 10UF-20-50 |
| C040 | 1 | 23-80341B15 | CAPACITOR | 10UF-20-50 |
| C041 | 1 | 23-80341B17 | CAPACITOR | 22UF-20-50 |
| C042 | 1 | 21-80342B10 | CAPACITOR | .1UF-20-50 |
| C043 | 1 | 21-80342B10 | CAPACITOR | .1UF-20-50 |
| C044 | 1 | 21-80342B09 | CAPACITOR | .01UF-20-50 |
| C045 | 1 | 21-80372B13 | CAPACITOR | .047UF-20-50 |
| C046 | 1 | 21-80396A52 | CAPACITOR,CERAMIC DISC | .01UF-20+80-200 |
| C047 | 1 | 21-80396A52 | CAPACITOR,CERAMIC DISC | .01UF-20+80-200 |
| C052 | 1 | 21-80342B09 | CAPACITOR | .01UF-20-50 |
| C053 | 1 | 21-80396A52 | CAPACITOR,CERAMIC DISC | .01UF-20+80-200 |
| C054 | 1 | 21-80396A52 | CAPACITOR,CERAMIC DISC | .01UF-20+80-200 |
| C056 | 1 | 21-80342B10 | CAPACITOR | .1UF-20-50 |
| C058 | 1 | 21-80342B09 | CAPACITOR | .01UF-20-50 |
| C059 | 1 | 21-80342B09 | CAPACITOR | .01UF-20-50 |
| C061 | 1 | 21-80311B95 | CAPACITOR | .01UF-20-100 |
| C062 | 1 | 21-80342B09 | CAPACITOR | .01UF-20-50 |
| C063 | 1 | 21-80396A52 | CAPACITOR,CERAMIC DISC | .01UF-20+80-200 |
| C064 | 1 | 21-80396A52 | CAPACITOR,CERAMIC DISC | .01UF-20+80-200 |
| C065 | 1 | 21-80396A52 | CAPACITOR,CERAMIC DISC | .01UF-20+80-200 |
| C066 | 1 | 21-80396A52 | CAPACITOR,CERAMIC DISC | .01UF-20+80-200 |
| C067 | 1 | 21-80396A50 | CAPACITOR, MODIFIED | 560PF-10-500 |
| C068 | 1 | 21-80396A50 | CAPACITOR, MODIFIED | 560PF-10-500 |
| C070 | 1 | 21-80342B09 | CAPACITOR | .01UF-20-50 |
| C071 | 1 | 21-80396A52 | CAPACITOR,CERAMIC DISC | .01UF-20+80-200 |
| C072 | 1 | 21-80396A52 | CAPACITOR,CERAMIC DISC | .01UF-20+80-200 |
| C073 | 1 | 21-80396A52 | CAPACITOR,CERAMIC DISC | .01UF-20+80-200 |
| C074 | 1 | 21-80396A52 | CAPACITOR,CERAMIC DISC | .01UF-20+80-200 |
| C075 | 1 | 21-80339B10 | CAPACITOR | 2PF-.5PF-500 |
| C076 | 1 | 21-80339B10 | CAPACITOR | 2PF-.5PF-500 |
| C077 | 1 | 21-80342B10 | CAPACITOR | .1UF-20-50 |
| C078 | 1 | 21-80342B10 | CAPACITOR | .1UF-20-50 |
| C079 | 1 | 21-80342B10 | CAPACITOR | .1UF-20-50 |
| C081 | 1 | 21-80342B09 | CAPACITOR | .01UF-20-50 |
| C082 | 1 | 21-80342B09 | CAPACITOR | .01UF-20-50 |
| C084 | 1 | 21-80342B09 | CAPACITOR | .01UF-20-50 |
| C086 | 1 | 21-80396A52 | CAPACITOR,CERAMIC DISC | .01UF-20+80-200 |
| C087 | 1 | 21-80396A52 | CAPACITOR,CERAMIC DISC | .01UF-20+80-200 |
| C089 | 1 | 21-80396A50 | CAPACITOR, MODIFIED | 560PF-10-500 |
| C090 | 1 | 21-80396A50 | CAPACITOR, MODIFIED | 560PF-10-500 |
| C091 | 1 | 21-80311B95 | CAPACITOR | .01UF-20-100 |

## SCOPE AMPLIFIER BOARD (A2)
(RTC-1005A)

*Figure 7-3. Printed Wiring Board Assembly and Parts List*

## SCOPE AMPLIFIER BOARD (A2) (Cont)
## RTC-1005A

| Find No. | Qty. Req. | Part No. | Nomenclature | Part Value |
|---|---|---|---|---|
| C092 | 1 | 21-80342B09 | CAPACITOR | .01UF-20-50 |
| C094 | 1 | 21-80396A52 | CAPACITOR,CERAMIC DISC | .01UF-20+80-200 |
| C095 | 1 | 21-80396A52 | CAPACITOR,CERAMIC DISC | .01UF-20+80-200 |
| C097 | 1 | 21-80396A50 | CAPACITOR, MODIFIED | 560PF-10-500 |
| C098 | 1 | 21-80396A50 | CAPACITOR, MODIFIED | 560PF-10-500 |
| C099 | 1 | 21-80396A50 | CAPACITOR, MODIFIED | 560PF-10-500 |
| C100 | 1 | 21-80396A50 | CAPACITOR, MODIFIED | 560PF-10-500 |
| C101 | 1 | 21-80339B10 | CAPACITOR | 2PF-.5PF-500 |
| C102 | 1 | 21-80339B10 | CAPACITOR | 2PF-.5PF-500 |
| C107 | 1 | 21-80342B09 | CAPACITOR | .01UF-20-50 |
| C108 | 1 | 21-80342B91 | CAPACITOR | 1UF-20-100 |
| C109 | 1 | 21-80341B59 | CAPACITOR | 2200PF-20-100 |
| C110 | 1 | 21-80659934 | CAPACITOR | 10PF-.5PF-500 |
| CR001 | 1 | 48-80345A85 | DIODE, ZENER | 75V-5-.5 |
| CR002 | 1 | 48-84463K02 | DIODE | |
| CR003 | 1 | 48-80372B54 | DIODE | |
| CR005 | 1 | 48-84463K02 | DIODE | |
| CR006 | 1 | 48-84463K02 | DIODE | |
| CR007 | 1 | 48-84463K02 | DIODE | |
| CR008 | 1 | 48-84463K02 | DIODE | |
| CR009 | 1 | 48-80345A82 | DIODE, ZENER | 33V-5-.5 |
| CR010 | 1 | 48-80345A83 | DIODE, ZENER | 39V-5-.5 |
| CR011 | 1 | 48-80345A83 | DIODE, ZENER | 39V-5-.5 |
| CR012 | 1 | 48-80345A84 | DIODE, ZENER | 68V-5-.5 |
| CR013 | 1 | 48-84463K02 | DIODE | |
| CR014 | 1 | 48-80345A82 | DIODE, ZENER | 33V-5-.5 |
| CR015 | 1 | 48-80345A83 | DIODE, ZENER | 39V-5-.5 |
| CR016 | 1 | 48-80345A83 | DIODE, ZENER | 39V-5-.5 |
| CR017 | 1 | 48-80345A84 | DIODE, ZENER | 68V-5-.5 |
| CR018 | 1 | 48-84463K02 | DIODE | |
| CR019 | 1 | 48-80345A82 | DIODE, ZENER | 33V-5-.5 |
| CR020 | 1 | 48-80345A83 | DIODE, ZENER | 39V-5-.5 |
| CR022 | 1 | 48-80345A83 | DIODE, ZENER | 39V-5-.5 |
| CR023 | 1 | 48-84463K02 | DIODE | |
| CR024 | 1 | 48-80345A82 | DIODE, ZENER | 33V-5-.5 |
| CR025 | 1 | 48-80345A83 | DIODE, ZENER | 39V-5-.5 |
| CR029 | 1 | 48-80345A83 | DIODE, ZENER | 39V-5-.5 |
| CR030 | 1 | 48-80345A84 | DIODE, ZENER | 68V-5-.5 |
| CR031 | 1 | 48-80345A84 | DIODE, ZENER | 68V-5-.5 |
| CR032 | 1 | 48-84463K02 | DIODE | |
| CR033 | 1 | 48-84463K02 | DIODE | |
| CR034 | 1 | 48-84463K02 | DIODE | |
| CR035 | 1 | 48-84463K02 | DIODE | |
| CR036 | 1 | 48-84463K02 | DIODE | |
| CR037 | 1 | 48-84463K02 | DIODE | |
| CR038 | 1 | 48-84463K02 | DIODE | |
| J003 | 1 | 09-80372B59 | CONNECTOR | |
| Q001 | 1 | 48-80340B87 | TRANSISTOR | MPSD01 |
| Q002 | 1 | 48-80345A51 | TRANSISTOR | |
| Q003 | 1 | 48-80345A51 | TRANSISTOR | |
| Q004 | 1 | 48-80345A52 | TRANSISTOR | |
| Q005 | 1 | 48-80345A51 | TRANSISTOR | |
| Q006 | 1 | 48-80340B85 | TRANSISTOR | MPS6519 |
| Q007 | 1 | 48-80340B85 | TRANSISTOR | MPS6519 |
| Q008 | 1 | 48-80340B85 | TRANSISTOR | MPS6519 |
| Q009 | 1 | 48-80345A51 | TRANSISTOR | |
| Q010 | 1 | 48-80345A51 | TRANSISTOR | |
| Q011 | 1 | 48-80340B86 | TRANSISTOR | MPS6520 |
| Q012 | 1 | 48-80341A48 | TRANSISTOR | MPS-U60 SCREENED |
| Q013 | 1 | 48-80341A47 | TRANSISTOR | MPS-U10 SCREENED |
| Q014 | 1 | 48-80345A51 | TRANSISTOR | |
| Q015 | 1 | 48-80345A51 | TRANSISTOR | |
| Q016 | 1 | 48-80340B86 | TRANSISTOR | MPS6520 |
| Q017 | 1 | 48-80341A48 | TRANSISTOR | MPS-U60 SCREENED |
| Q018 | 1 | 48-80341A47 | TRANSISTOR | MPS-U10 SCREENED |
| Q019 | 1 | 48-80340B85 | TRANSISTOR | MPS6519 |
| Q020 | 1 | 48-80340B85 | TRANSISTOR | MPS6519 |
| Q021 | 1 | 48-80345A51 | TRANSISTOR | |
| Q022 | 1 | 48-80345A51 | TRANSISTOR | |
| Q023 | 1 | 48-80340B86 | TRANSISTOR | MPS6520 |
| Q024 | 1 | 48-80341A48 | TRANSISTOR | MPS-U60 SCREENED |
| Q025 | 1 | 48-80341A47 | TRANSISTOR | MPS-U10 SCREENED |
| Q026 | 1 | 48-80345A51 | TRANSISTOR | |
| Q027 | 1 | 48-80345A51 | TRANSISTOR | |
| Q028 | 1 | 48-80340B86 | TRANSISTOR | MPS6520 |
| Q029 | 1 | 48-80341A48 | TRANSISTOR | MPS-U60 SCREENED |
| Q030 | 1 | 48-80341A47 | TRANSISTOR | MPS-U10 SCREENED |
| Q031 | 1 | 48-80340B87 | TRANSISTOR | MPSD01 |
| Q032 | 1 | 48-80345A14 | TRANSISTOR | |
| Q033 | 1 | 48-80340B88 | TRANSISTOR | MPSD51 |
| Q034 | 1 | 48-80345A15 | TRANSISTOR | |
| Q035 | 1 | 48-80340B87 | TRANSISTOR | MPSD01 |
| Q036 | 1 | 48-80340B87 | TRANSISTOR | MPSD01 |
| Q037 | 1 | 48-80340B85 | TRANSISTOR | MPS6520 |
| R001 | 1 | 05-10621C76 | RESISTOR | 6.98K-1-1/4 |
| R002 | 1 | 05-10621B70 | RESISTOR | 562-1-1/4 |
| R003 | 1 | 05-10621D88 | RESISTOR | 100K-1-1/4 |
| R004 | 1 | 05-10621D83 | RESISTOR | 100K-1-1/4 |
| R005 | 1 | 05-10621E77 | RESISTOR | 825K-1-1/4 |
| R006 | 1 | 05-10621D80 | RESISTOR | 62.5K-1-1/4 |
| R007 | 1 | 05-10621C83 | RESISTOR | 8.25K-1-1/4 |
| R009 | 1 | 05-10621C82 | RESISTOR | 8.06K-1-1/4 |
| R010 | 1 | 05-10621C60 | RESISTOR | 4.75K-1-1/4 |
| R011 | 1 | 18-83452F11 | RESISTOR,VARIABLE | 5K |
| R012 | 1 | 05-11009C86 | RESISTOR | 36K-5-1/4 |
| R013 | 1 | 05-11009D04 | RESISTOR | 180K-5-1/4 |
| R014 | 1 | 05-11009C89 | RESISTOR | 47K-5-1/4 |
| R015 | 1 | 05-11009C73 | RESISTOR | 10K-5-1/4 |
| R016 | 1 | 05-11009C73 | RESISTOR | 10K-5-1/4 |
| R019 | 1 | 05-11009C95 | RESISTOR | 82K-5-1/4 |
| R020 | 1 | 05-11009C65 | RESISTOR | 4.7K-5-1/4 |
| R021 | 1 | 05-11009C49 | RESISTOR | 1K-5-1/4 |
| R022 | 1 | 05-11009C73 | RESISTOR | 10K-5-1/4 |
| R023 | 1 | 05-11009C73 | RESISTOR | 10K-5-1/4 |
| R024 | 1 | 05-10621C79 | RESISTOR | 7.5K-1-1/4 |
| R025 | 1 | 05-10621C52 | RESISTOR | 3.92K-1-1/4 |
| R026 | 1 | 05-11009C65 | RESISTOR | 4.7K-5-1/4 |
| R027 | 1 | 05-11009C65 | RESISTOR | 4.7K-5-1/4 |
| R028 | 1 | 05-11009C43 | RESISTOR | 560-5-1/4 |
| R029 | 1 | 05-11009C73 | RESISTOR | 10K-5-1/4 |
| R030 | 1 | 05-11009C73 | RESISTOR | 10K-5-1/4 |
| R031 | 1 | 05-11009C25 | RESISTOR | 100-5-1/4 |
| R032 | 1 | 05-11009C25 | RESISTOR | 100-5-1/4 |
| R033 | 1 | 18-80342B96 | RESISTOR NETWORK | 10K SIP |
| R034 | 1 | 05-11009C73 | RESISTOR | 10K-5-1/4 |
| R035 | 1 | 05-11009C73 | RESISTOR | 10K-5-1/4 |
| R036 | 1 | 05-11009C73 | RESISTOR | 10K-5-1/4 |
| R037 | 1 | 05-11009C73 | RESISTOR | 10K-5-1/4 |
| R039 | 1 | 05-11009C97 | RESISTOR | 100K-5-1/4 |
| R040 | 1 | 05-11009C61 | RESISTOR | 3.3K-5-1/4 |
| R041 | 1 | 05-11009C65 | RESISTOR | 4.7K-5-1/4 |
| R042 | 1 | 05-10621C77 | RESISTOR | 5.62K-1-1/4 |
| R043 | 1 | 05-10621C31 | RESISTOR | 2.37K-1-1/4 |
| R045 | 1 | 05-11009C70 | RESISTOR | 7.5K-5-1/4 |
| R046 | 1 | 05-10621E17 | RESISTOR | 196K-1-1/4 |
| R047 | 1 | 05-10621D14 | RESISTOR | 16.9K-1-1/4 |
| R048 | 1 | 05-11009C73 | RESISTOR | 10K-5-1/4 |
| R049 | 1 | 05-11009C29 | RESISTOR | 150-5-1/4 |
| R050 | 1 | 05-11009C71 | RESISTOR | 8.2K-5-1/4 |
| R051 | 1 | 05-11009C70 | RESISTOR | 7.5K-5-1/4 |
| R052 | 1 | 05-10621E17 | RESISTOR | 196K-1-1/4 |
| R053 | 1 | 05-10621D14 | RESISTOR | 16.9K-1-1/4 |
| R054 | 1 | 05-11009C73 | RESISTOR | 10K-5-1/4 |
| R055 | 1 | 05-11009C29 | RESISTOR | 150-5-1/4 |
| R056 | 1 | 05-11009C71 | RESISTOR | 8.2K-5-1/4 |
| R057 | 1 | 05-10621C72 | RESISTOR | 6.34K-1-1/4 |
| R058 | 1 | 05-10621C11 | RESISTOR | 1.47K-1-1/4 |
| R059 | 1 | 05-11009C25 | RESISTOR | 100-5-1/4 |
| R060 | 1 | 05-11009C65 | RESISTOR | 4.7K-5-1/4 |
| R061 | 1 | 05-11009C49 | RESISTOR | 1K-5-1/4 |
| R062 | 1 | 18-83452F07 | RESISTOR,VARIABLE | 500 |
| R070 | 1 | 05-11009D14 | RESISTOR | 470K-5-1/4 |
| R071 | 1 | 05-11009D06 | RESISTOR | 220K-5-1/4 |
| R072 | 1 | 05-11009D14 | RESISTOR | 470K-5-1/4 |
| R074 | 1 | 05-10621D52 | RESISTOR | 42.2K-1-1/4 |
| R075 | 1 | 05-11009C89 | RESISTOR | 47K-5-1/4 |
| R076 | 1 | 05-00124B26 | RESISTOR | 1.5M-5-1/4 |
| R077 | 1 | 05-10621E05 | RESISTOR | 1M-1-1/4 |
| R078 | 1 | 05-10621E85 | RESISTOR | 1M-1-1/4 |
| R079 | 1 | 05-00124A67 | RESISTOR | 39K-5-1/4 |
| R080 | 1 | 05-11009D14 | RESISTOR | 470K-5-1/4 |
| R081 | 1 | 05-11009C53 | RESISTOR | 1.5K-5-1/4 |
| R086 | 1 | 05-11009C49 | RESISTOR | 1K-5-1/4 |
| R087 | 1 | 05-11009C25 | RESISTOR | 100-5-1/4 |
| R088 | 1 | 18-83452F01 | RESISTOR,VARIABLE | 2K |
| R089 | 1 | 05-11009C25 | RESISTOR | 100-5-1/4 |
| R090 | 1 | 05-11009C89 | RESISTOR | 47K-5-1/4 |
| R091 | 1 | 18-83452F23 | RESISTOR,VARIABLE | 500K |
| R092 | 1 | 05-10621A01 | RESISTOR | 10-1-1/4 |
| R093 | 1 | 05-10621A01 | RESISTOR | 10-1-1/4 |
| R094 | 1 | 18-83452F23 | RESISTOR,VARIABLE | 500K |
| R095 | 1 | 05-11009C89 | RESISTOR | 47K-5-1/4 |
| R096 | 1 | 05-10621B82 | RESISTOR | 750-1-1/4 |
| R097 | 1 | 05-10621B82 | RESISTOR | 750-1-1/4 |
| R098 | 1 | 05-10621B94 | RESISTOR | 1K-1-1/4 |
| R099 | 1 | 05-10621B94 | RESISTOR | 1K-1-1/4 |
| R100 | 1 | 18-83452F11 | RESISTOR,VARIABLE | 5K |
| R101 | 1 | 05-10621B70 | RESISTOR | 562-1-1/4 |
| R102 | 1 | 05-10621B70 | RESISTOR | 562-1-1/4 |
| R103 | 1 | 05-10621A85 | RESISTOR | 75-1-1/4 |
| R104 | 1 | 05-10621A85 | RESISTOR | 75-1-1/4 |
| R105 | 1 | 05-11009C49 | RESISTOR | 1K-5-1/4 |
| R106 | 1 | 05-11009C73 | RESISTOR | 10K-5-1/4 |
| R107 | 1 | 05-11009C65 | RESISTOR | 4.7K-5-1/4 |
| R108 | 1 | 18-83452F09 | RESISTOR,VARIABLE | 1K |
| R109 | 1 | 05-11009C65 | RESISTOR | 4.7K-5-1/4 |
| R110 | 1 | 05-10621B82 | RESISTOR | 464-1-1/4 |
| R111 | 1 | 05-10621C24 | RESISTOR | 2K-1-1/4 |
| R114 | 1 | 05-10621C35 | RESISTOR | 2.61K-1-1/4 |
| R116 | 1 | 05-10621A01 | RESISTOR | 10-1-1/4 |
| R117 | 1 | 05-10621A01 | RESISTOR | 10-1-1/4 |
| R118 | 1 | 05-10621B82 | RESISTOR | 464-1-1/4 |
| R119 | 1 | 05-10621C59 | RESISTOR | 4.64K-1-1/4 |
| R120 | 1 | 05-10621C63 | RESISTOR | 5.11K-1-1/4 |
| R121 | 1 | 05-10621C91 | RESISTOR | 10K-1-1/4 |
| R122 | 1 | 05-10621C91 | RESISTOR | 10K-1-1/4 |
| R123 | 1 | 05-10621C19 | RESISTOR | 1.78K-1-1/4 |
| R124 | 1 | 05-10621C19 | RESISTOR | 1.78K-1-1/4 |
| R125 | 1 | 05-10621D68 | RESISTOR | 61.9K-1-1/4 |
| R126 | S01 | 05-10621C55 | RESISTOR | 4.22K-1-1/4 |
| R126 | S01 | 05-10621C31 | RESISTOR | 2.37K-1-1/4 |
| R126 | S01 | 05-10621C35 | RESISTOR | 2.61K-1-1/4 |
| R126 | S01 | 05-10621C39 | RESISTOR | 2.87K-1-1/4 |
| R126 | S01 | 05-10621C42 | RESISTOR | 3.09K-1-1/4 |
| R126 | S01 | 05-10621C43 | RESISTOR | 3.16K-1-1/4 |
| R126 | 1 | 05-10621C47 | RESISTOR | 3.48K-1-1/4 |
| R126 | S01 | 05-10621C51 | RESISTOR | 3.83K-1-1/4 |
| R126 | S01 | 05-10621C55 | RESISTOR | 4.02K-1-1/4 |
| R126 | S01 | 05-10621C59 | RESISTOR | 4.64K-1-1/4 |
| R126 | S01 | 05-10621C63 | RESISTOR | 5.11K-1-1/4 |
| R127 | 1 | 05-10621C35 | RESISTOR | 2.61K-1-1/4 |
| R129 | 1 | 05-10621A01 | RESISTOR | 10-1-1/4 |
| R130 | 1 | 05-10621A01 | RESISTOR | 10-1-1/4 |
| R131 | 1 | 05-10621B82 | RESISTOR | 464-1-1/4 |
| R132 | 1 | 05-10621C59 | RESISTOR | 4.64K-1-1/4 |
| R133 | 1 | 05-10621C63 | RESISTOR | 5.11K-1-1/4 |
| R134 | 1 | 05-10621C91 | RESISTOR | 10K-1-1/4 |
| R135 | 1 | 05-10621C91 | RESISTOR | 10K1-1-1/4 |
| R136 | 1 | 05-10621C19 | RESISTOR | 1.78K-1-1/4 |
| R137 | 1 | 05-10621C19 | RESISTOR | 1.78K-1-1/4 |
| R138 | 1 | 05-10621D68 | RESISTOR | 61.9K-1-1/4 |
| R139 | S01 | 05-10621C55 | RESISTOR | 4.22K-1-1/4 |
| R139 | S01 | 05-10621C31 | RESISTOR | 2.37K-1-1/4 |
| R139 | S01 | 05-10621C35 | RESISTOR | 2.61K-1-1/4 |
| R139 | S01 | 05-10621C39 | RESISTOR | 2.87K-1-1/4 |
| R139 | S01 | 05-10621C42 | RESISTOR | 3.09K-1-1/4 |
| R139 | S01 | 05-10621C43 | RESISTOR | 3.16K-1-1/4 |
| R139 | 1 | 05-10621C47 | RESISTOR | 3.48K-1-1/4 |
| R139 | S01 | 05-10621C51 | RESISTOR | 3.83K-1-1/4 |
| R139 | S01 | 05-10621C55 | RESISTOR | 4.02K-1-1/4 |
| R139 | S01 | 05-10621C59 | RESISTOR | 4.64K-1-1/4 |
| R139 | S01 | 05-10621C63 | RESISTOR | 5.11K-1-1/4 |
| R140 | 1 | 05-10621B82 | RESISTOR | 750-1-1/4 |
| R141 | 1 | 05-10621B82 | RESISTOR | 750-1-1/4 |
| R142 | 1 | 05-10621B94 | RESISTOR | 1K-1-1/4 |
| R143 | 1 | 05-10621B94 | RESISTOR | 1K-1-1/4 |
| R144 | 1 | 18-83452F11 | RESISTOR,VARIABLE | 5K |
| R145 | 1 | 05-10621B70 | RESISTOR | 562-1-1/4 |
| R146 | 1 | 05-10621B70 | RESISTOR | 562-1-1/4 |
| R147 | 1 | 05-10621A85 | RESISTOR | 75-1-1/4 |
| R148 | 1 | 05-10621A85 | RESISTOR | 75-1-1/4 |
| R149 | 1 | 05-10621C07 | RESISTOR | 1330-1-1/4 |
| R150 | 1 | 05-10621C07 | RESISTOR | 1330-1-1/4 |
| R151 | 1 | 05-11009C49 | RESISTOR | 1K-5-1/4 |
| R152 | 1 | 05-11009C73 | RESISTOR | 10K-5-1/4 |
| R153 | 1 | 05-11009C65 | RESISTOR | 4.7K-5-1/4 |
| R154 | 1 | 18-83452F09 | RESISTOR,VARIABLE | 1K |
| R155 | 1 | 05-11009C65 | RESISTOR | 4.7K-5-1/4 |
| R156 | 1 | 05-10621B82 | RESISTOR | 464-1-1/4 |
| R157 | 1 | 05-10621C24 | RESISTOR | 2K-1-1/4 |
| R158 | 1 | 05-10621C24 | RESISTOR | 2K-1-1/4 |
| R159 | 1 | 05-10621B82 | RESISTOR | 464-1-1/4 |
| R160 | 1 | 05-10621C35 | RESISTOR | 2.61K-1-1/4 |
| R162 | 1 | 05-10621A01 | RESISTOR | 10-1-1/4 |
| R163 | 1 | 05-10621A01 | RESISTOR | 10-1-1/4 |
| R164 | 1 | 05-10621B62 | RESISTOR | 464-1-1/4 |
| R165 | 1 | 05-10621C59 | RESISTOR | 4.64K-1-1/4 |
| R166 | 1 | 05-10621C63 | RESISTOR | 5.11K-1-1/4 |
| R167 | 1 | 05-10621C91 | RESISTOR | 10K-1-1/4 |
| R168 | 1 | 05-10621C91 | RESISTOR | 10K-1-1/4 |
| R169 | 1 | 05-10621C19 | RESISTOR | 1.78K-1-1/4 |
| R170 | 1 | 05-10621C19 | RESISTOR | 1.78K-1-1/4 |
| R171 | 1 | 05-10621C35 | RESISTOR | 2.61K-1-1/4 |
| R173 | 1 | 05-10621A01 | RESISTOR | 10-1-1/4 |
| R174 | 1 | 05-10621A01 | RESISTOR | 10-1-1/4 |
| R175 | 1 | 05-10621B62 | RESISTOR | 464-1-1/4 |
| R176 | 1 | 05-10621C59 | RESISTOR | 4.64K-1-1/4 |
| R177 | 1 | 05-10621C63 | RESISTOR | 5.11K-1-1/4 |
| R178 | 1 | 05-10621C91 | RESISTOR | 10K-1-1/4 |
| R179 | 1 | 05-10621C91 | RESISTOR | 10K-1-1/4 |
| R180 | 1 | 05-10621C19 | RESISTOR | 1.78K-1-1/4 |
| R181 | 1 | 05-10621C19 | RESISTOR | 1.78K-1-1/4 |
| R182 | 1 | 05-10621D68 | RESISTOR | 61.9K-1-1/4 |
| R183 | 1 | 5043ED2K670F | RESISTOR | 2.67K-1-1/4 NOMINAL |
| R183 | 1 | 5043ED2K370F | RESISTOR | 2.37K-1-1/4 |
| R183 | S01 | 5043ED2K610F | RESISTOR | 2.61K-1-1/4 |
| R183 | S01 | 5043ED3K090F | RESISTOR | 3.09K-1-1/4 |
| R183 | S01 | 5043ED3K160F | RESISTOR | 3.16K-1-1/4 |
| R183 | S01 | 5043ED3K480F | RESISTOR | 3.48K-1-1/4 |
| R184 | 1 | 05-10621D68 | RESISTOR | 61.9K-1-1/4 |
| R185 | 1 | 5043ED2K670F | RESISTOR | 2.67K-1-1/4 NOMINAL |
| R185 | S01 | 5043ED2K370F | RESISTOR | 2.37K-1-1/4 |
| R185 | S01 | 5043ED2K610F | RESISTOR | 2.61K-1-1/4 |
| R185 | S01 | 5043ED3K090F | RESISTOR | 3.09K-1-1/4 |
| R185 | S01 | 5043ED3K160F | RESISTOR | 3.16K-1-1/4 |
| R185 | S01 | 5043ED3K480F | RESISTOR | 3.48K-1-1/4 |
| R186 | 1 | 05-10621C24 | RESISTOR | 2K-1-1/4 |
| R187 | 1 | 05-10621B62 | RESISTOR | 464-1-1/4 |
| R188 | 1 | 05-11009C65 | RESISTOR | 4.7K-5-1/4 |
| R189 | 1 | 05-11009C55 | RESISTOR | 2K-5-1/4 |
| R190 | 1 | 05-11009C15 | RESISTOR | 39-5-1/4 |
| TP001 | 1 | 09-80331A88 | JACK | WHITE |
| TP002 | 1 | 09-80331A88 | JACK | WHITE |
| TP003 | 1 | 09-80331A88 | JACK | WHITE |
| TP004 | 1 | 09-80331A88 | JACK | WHITE |
| TP005 | 1 | 09-80331A88 | JACK | WHITE |
| TP006 | 1 | 09-80331A88 | JACK | WHITE |
| TP007 | 1 | 09-80331A88 | JACK | WHITE |
| TP008 | 1 | 09-80331A88 | JACK | WHITE |
| TP009 | 1 | 09-80331A88 | JACK | WHITE |
| TP010 | 1 | 09-80331A88 | JACK | WHITE |
| U001 | 1 | 51-80396A16 | INTEGRATED CIRCUIT | LM324N SCREENED |
| U002 | 1 | 51-82884L59 | INTEGRATED CIRCUIT | |
| U003 | 1 | 51-80345A01 | INTEGRATED CIRCUIT | CA3140E SCREENED |
| U004 | 1 | 51-80347A38 | INTEGRATED CIRCUIT | |
| U005 | 1 | 51-80345A01 | INTEGRATED CIRCUIT | CA3140E SCREENED |
| U006 | 1 | 51-82884J71 | INTEGRATED CIRCUIT | |
| U007 | 1 | 51-05596E46 | INTEGRATED CIRCUIT | |
| U009 | 1 | 51-80345A01 | INTEGRATED CIRCUIT | CA3140E SCREENED |
| U010 | 1 | 51-82884L71 | INTEGRATED CIRCUIT | |
| U011 | 1 | 51-82884L10 | INTEGRATED CIRCUIT | |
| U012 | 1 | 51-80396A16 | INTEGRATED CIRCUIT | LM324N SCREENED |
| U013 | 1 | 51-80345A06 | INTEGRATED CIRCUIT | LM319N SCREENED |
| U014 | 1 | 51-80347A38 | INTEGRATED CIRCUIT | |
| U024 | 1 | 51-80396A16 | INTEGRATED CIRCUIT | LM324N SCREENED |
| U025 | 1 | 51-80345A04 | INTEGRATED CIRCUIT | CA3240E SCREENED |
| U027 | 1 | 51-80343B25 | INTEGRATED CIRCUIT | CA3183E SCREENED |
| U028 | 1 | 51-80343B25 | INTEGRATED CIRCUIT | CA3183E SCREENED |


7-8

## POWER SUPPLY (A3-A6)

*Figure 8-1. Block Diagram*

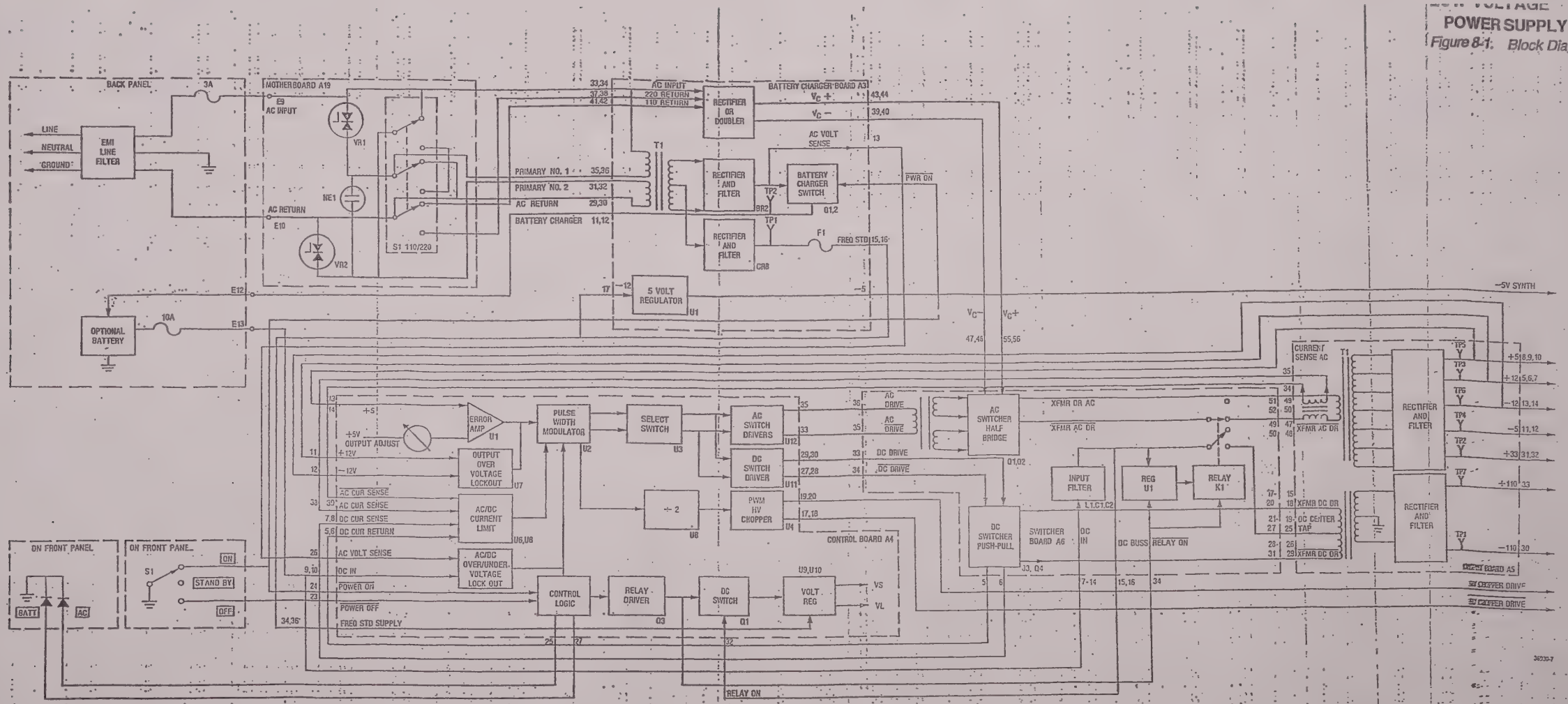

**BATTERY CHARGER BOARD (A3)**
(RTP-1008A)
*Figure 8-2. Schematic*

NOTES:

1. PARTIAL REFERENCE DESIGNATIONS ARE SHOWN. FOR COMPLETE DESIGNATIONS PREFIX WITH 1A3.
2. UNLESS OTHERWISE SPECIFIED:
   ALL RESISTORS ARE IN OHMS ± 5 PCT, 1/4 WATT.
   ALL CAPACITORS ARE IN UF.
   ALL INDUCTORS ARE IN UH.:
   ALL VOLTAGES ARE IN DC.

| LAST USED | NOT USED |
|---|---|
| BR2 | |
| C6 | |
| F1 | |
| R8 | |
| T1 | |
| VR3 | |
| CR7 | CR2 |
| Q2 | |
| RT2 | |
| TP2 | |
| U1 | |

WARNING:
STATIC-SENSITIVE PARTS
HANDLE APPROPRIATELY

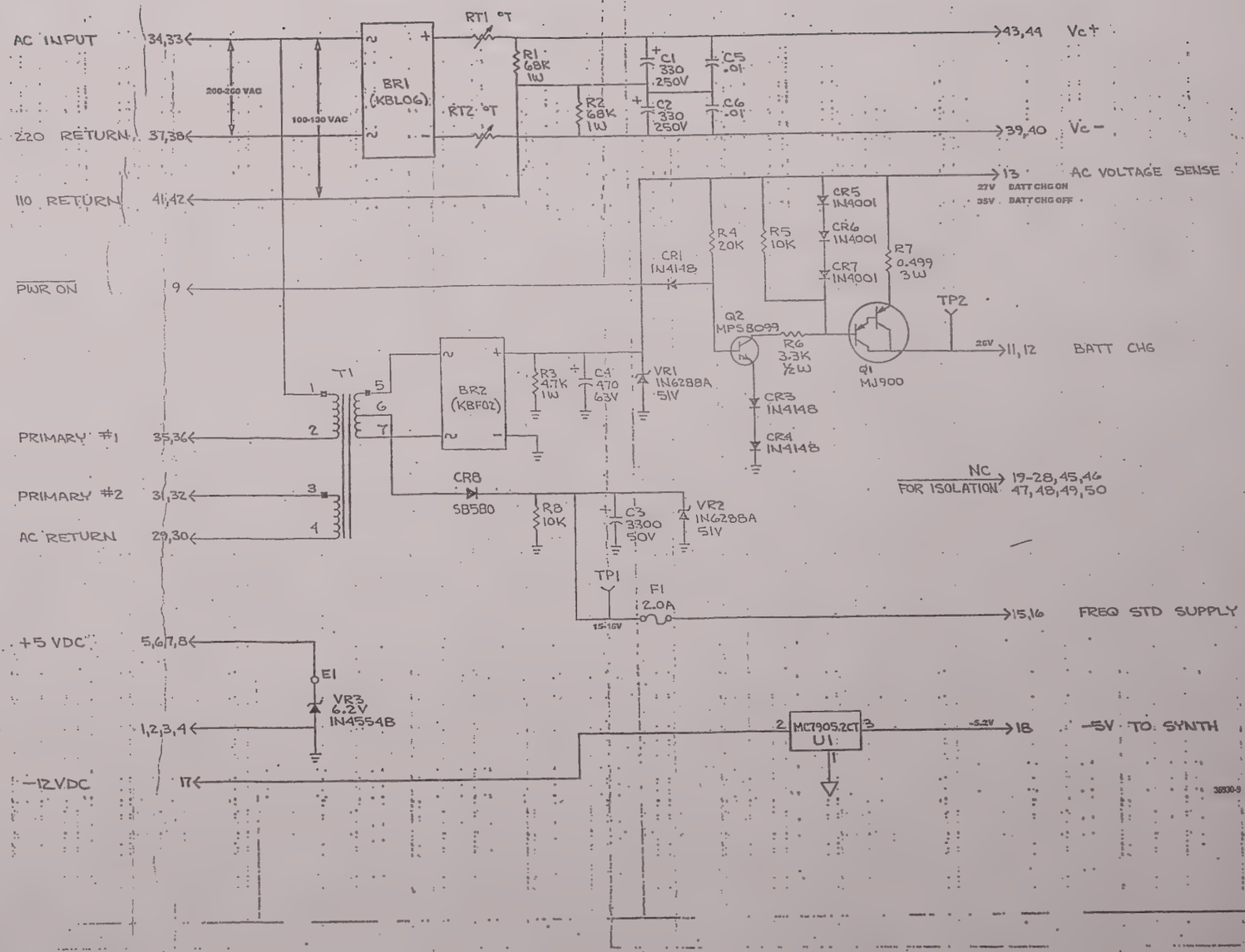

# SECTION 8.
# LOW-VOLTAGE POWER SUPPLY (A3-A6)

## 8.1 DESCRIPTION

The Low-Voltage Power Supply consists of four boards: 1) Battery Charger board (A3), 2) Control board (A4), 3) Output board (A5), and 4) Switcher board (A6). This power supply converts an ac or a dc voltage input to the dc voltages required to power the System Analyzer. In ac mode, the power supply operates as an off-line, half-bridge converter for inputs of 100 to 130 Vac or 200 to 260 Vac at 50 to 400 Hz. In dc mode, the power supply operates as a push-pull converter for inputs of 11 to 19 Vdc.

When connected to an ac power source, the unit automatically switches to the ac operating mode. The Battery Charger is included in this power supply for charging the optional external battery pack. A standby mode allows the operator to shut off power to all modules in the System Analyzer except the OCXO/TCXO and the Battery Charger.

The Low-Voltage Power Supply contains protection circuitry that will shut down or lock out the power supply for the following conditions: 1) a power-supply short circuit, 2) high and low input voltages, and 3) high internal temperatures.

A block diagram of the Low-Voltage Power Supply is shown at the end of this section in Figure 8-1.

## 8.2 THEORY OF OPERATION

### 8.2.1 BATTERY CHARGER BOARD (A3)

#### 8.2.1.1 General

The Battery Charger board contains the rectifier circuitry for the ac off-line switching power supply and part of the input filtering. A line transformer supplies the external battery pack with charging voltage, supplies bias voltage to the control circuitry for the power supply, and powers the 10-MHz Frequency-Standard Interface board (A16). A separate −5V regulator for the RF Synthesizer module (A9) is also included, along with a 6.2V zener diode (VR3) that provides an outer voltage clamp on the +5V output line of the Low-Voltage Power Supply.

A schematic of the Battery Charger board is shown at the end of this section in Figure 8-2, the printed wiring board and parts list in Figure 8-3, and the assembly and parts list in Figure 8-4.

#### 8.2.1.2 Rectifier/Doubler

The bridge rectifier (BR1) and the filter capacitors (C1, C2, C5, and C6) rectify and filter the raw ac input to a dc output on the Vc+ and Vc− lines. Some of the filter capacitors are on the A3 board; the rest (C3, C4, C12, and C13) are on the Switcher board (A6). A nominal 230-Vac input uses the AC INPUT and 220 RETURN lines, which are connected to the inputs of the bridge rectifier. The bridge rectifier provides full-wave rectification of the ac input, and the filter capacitors filter the signal to a nominal level of 325 Vdc. For a nominal 115-Vac input, half of the bridge rectifier is used (the AC INPUT line) in conjunction with the filter capacitors (the 110 RETURN line) to provide a full-wave voltage doubler. The voltage doubler then produces a nominal 325-Vdc output. Thermistors RT1 and RT2 limit the initial in-rush current to the filter capacitors.

#### 8.2.1.3 Line Transformer

The line transformer (T1) has two primary windings and a single, center-tapped secondary. The two primary windings are switched on the System Motherboard (A19) by the 110/220 switch — in series for 220V operation and in parallel for 110V operation. This provides the same voltage on the secondary winding for operation at inputs of both 110 and 220 Vac. The secondary winding provides two outputs. One output, AC VOLTAGE SENSE/BATTERY CHARGER, is full-wave rectified by bridge rectifier BR2 and filtered by capacitor C4 to a level of 27 to 35 Vdc. The other output, FREQUENCY STANDARD SUPPLY, is half-wave rectified by CR8 and filtered by capacitor C3 to a level of 15 to 16 Vdc.

#### 8.2.1.4 Battery Charger

The Battery Charger circuitry is selected by the POWER ON line coming from the front panel. A no-connect on the POWER ON line will turn transistor Q2 on, which enables transistor Q1. Transistor Q1 is biased for constant current operation (1.2A) by resistor R7 and diodes CR5, CR6, and CR7.

### 8.2.2 CONTROL BOARD (A4)

#### 8.2.2.1 General

The Control board controls, protects, and regulates the System Analyzer's Low-Voltage Power Supply. On

the Control board are the error amplifier, the pulse-width modulator, and the Switcher drive-circuitry portion of the converter's regulation control loop. There is also a pulse-width modulator which drives the switching transistor for the High-Voltage Power Supply. The Control board protects the converter with lockouts under four conditions: output overvoltage, input ac and dc under/overvoltage, output overload or short-circuit, and high internal temperatures.

A block diagram of the Control board is shown at the end of this section in Figure 8-5, a schematic in Figure 8-6, and the printed wiring board assembly and parts list in Figure 8-7.

### 8.2.2.2 AC/DC Switch-Over

The ac/dc switch-over section provides 1) the voltage for the Control board, and 2) the switch-over circuitry to change between ac and dc operation. For dc operation, the dc input is connected to DC BUS input via the input filter (C1, C2 and L1) on the Switcher board. During switch-over, transistor Q2 is off, which means there is no AC VOLTAGE SENSE, which enables transistors Q1 and Q3. Q3 then energizes relay K1 on the Switcher board. This switches the dc primary to the chopping transformer and disconnects the ac primary. Q1 then switches the DC BUS through CR16 to the FREQUENCY STD SUPPLY line and the voltage regulator (U9 and U10). U9 and U10 supply power to $V_S$ and $V_L$ on the Control board. For ac operation, the FREQUENCY STD SUPPLY line supplies power to the two regulators, U9 and U10. AC operation overrides dc operation through the AC VOLTAGE SENSE line, which turns Q2 on and Q3 off. This pulls the $\overline{\text{RELAY ON}}$ line high, up to the DC BUS, causing relay K1 to switch the ac primary to the chopping transformer.

### 8.2.2.3 Loop Filter

The loop filter consists of a combination error amplifier/filter which controls the bandwidth and stability of the control loop. The error amplifier compares the +5V output with the reference voltage set by potentiometer R6. R6 is adjusted to provide a +5.2V output. The loop filter provides a 1-kHz, 3-dB bandwidth.

### 8.2.2.4 Drivers and Control

The low-voltage driver and control section contains the pulse-width modulator, dead-time select, and ac/dc drivers. The error voltage from the loop filter is connected to the pulse-width modulator U2 for duty-cycle control of switchers. Pulse-width modulator U2 provides two 40-kHz complementary outputs. R10 and C7 control the frequency. Dead time between the two complementary drive signals ensures that the two transistor switches (Q1 and Q2, or Q3 and Q4 on the A6 board) never turn on at the same time. The dead time is selected by Q6 via the DC BUS line for 0.5 µsec in the dc mode (R63 and C7) and 2 µsec in the ac mode (R9 and C7). The complementary outputs are switched by U3 to either the ac drivers (U11) or the dc drivers (U12). The driver-select circuitry (Q15 and U5) is controlled by the AC VOLTAGE SENSE line. U2 uses a timing capacitor (C8) to soft-start the power supply.

### 8.2.2.5 Lockout for Output Overvoltage

Output-overvoltage lockout protects modules and boards in the System Analyzer from high voltages on outputs of the Low-Voltage Power Supply. The +12V and −12V outputs are monitored by comparator U7. When it detects an overvoltage, this comparator will shut down the power supply via the input to the pulse-width modulator. The +5V output is protected against overvoltage by zener diode VR3 on the A3 board. The +33V and −5V outputs are protected by VR1 and VR2 on the A5 board.

### 8.2.2.6 Current-Limit Lockout

The current-limit lockout is used to monitor the power the System Analyzer draws from the power supply. This monitoring measures the instantaneous current in the switching transistors. In dc mode, the switching current is measured by R20 (8mV/A) on the Switcher board and then compared by U6B to a dc reference, thus providing a current limit of 25A. In ac mode, the switching current is monitored by T1 (100/1 turns ratio) on the Output board. The signals AC CURRENT SENSE and $\overline{\text{AC CURRENT SENSE}}$ are full-wave rectified by CR5-CR8, which are loaded with 100 ohms by R29. The resulting voltage is 1 V/A of the dc switching current. U6A compares this voltage to a dc reference, providing a current limit of 1.5A. When the current limit is exceeded, U6A sets the current-limit latch (U84), shutting down the power supply via the shut-down pin on U2. The current latch is reset by toggling the POWER switch on the front panel.

### 8.2.2.7 Lockout for Input Over/Undervoltage

For voltages outside the specified input range of 100 to 130 Vac, 200 to 260 Vac, or 11 to 19 Vdc, the circuitry for over/undervoltage lockout shuts down the power supply via the soft-start pin on U2. Lockout of ac and dc input undervoltage uses the same circuitry. The ac input voltage is monitored via the FREQUENCY STD SUPPLY line, and the dc input voltage is monitored via the DC BUS line. When the output of U9 drops below 8.2V, the zener diode VR4 will drop out, turning Q4 off. This will allow CR19 to turn Q5 on, causing the power supply to shut down via the soft-start pin on U2. When the DC IN line goes above 19V, VR3 will zener, turning Q5 on. For ac overvoltage, the AC VOLTAGE SENSE signal is divided by R30 and R1 and then

compared by U6D to a dc reference. When an overvoltage occurs, the output of U6D will shut down the supply via the soft-start.

#### 8.2.2.8 Lockout for High Internal Temperature

When the internal temperature of the power supply rises above 85°C, switch S1 will close, shutting down the power supply via the soft-start on U2.

#### 8.2.2.9 High-Voltage Driver

The oscillator output of the pulse-width modulator (U2) is fed to a divide-by-two frequency divider (U8B). This output is used to synchronize the constant duty cycle pulse-width modulator (U4) that drives the switching transistors for the High-Voltage Power Supply. This modulator operates at a constant duty cycle of 20 kHz, with a dead time of 2 µsec. R47 and C13 control the operating frequency, while R27 and C13 control the dead time. Modulator U4 provides ±5V complementary output, allowing more efficient drive of the switching transistors; this is because the bases are switched negative to sweep out the charge for turn-off.

#### 8.2.2.10 Control Logic Functions

Table 8-1 shows the control logic functions for the A4 board.

### 8.2.3 OUTPUT BOARD (A5)

#### 8.2.3.1 General

The Output board contains the chopping transformer, rectifiers and filters for the Low-Voltage Power Supply. The chopping transformer (T1) has two primary windings (one for ac and one for dc operation) and a multiple-output secondary which provides ±5V, ±12V, ±110V, and +33V. Also included on this board is a current-sensing transformer (T2) for sensing primary current on the ac off-line side of the chopping transformer.

A schematic of the Output board is shown at the end of this section in Figure 8-8, and the printed wiring board assembly and parts list in Figure 8-9.

#### 8.2.3.2 AC Operation

During ac operation, the half-bridge switching transistors (Q1 and Q2) on the Switcher board (A6) drive the chopping transformer via the XFMR AC DR and $\overline{\text{XFMR AC DR}}$ primary winding. The transistors drive current into and then out of the primary winding. To ensure that both Q1 and Q2 are off, dead time between these two transistors is important. Without dead time, there will be a short-circuit across the primary winding. The rectified-average ac voltage at the primary winding is a nominal 87V. During ac operation, the primary current is monitored by the current-sensing transformer (T2). The ratio for the current-sensing transformation is 100 to 1, and the secondary is loaded with 100 ohms on the Control board (A4). This produces a secondary output of 1V/A of primary current in the chopping transformer. If the primary current in the chopping transformer rises above 1.5A (due to an excessive load or a short on the secondaries), the power supply will shut down.

#### 8.2.3.3 DC Operation

During dc operation, the push-pull switching transistor (Q3 and Q4) on Switcher board A6 drives the chopping transformer via DC CENTER TAP, XFMR DC DR, and $\overline{\text{XFMR DC DR}}$. This primary winding is center-tapped. A dc voltage is applied to the center tap, and XFMR DC DR and $\overline{\text{XFMR DC DR}}$ are alternately pulled low by switching transistors. The nominal dc voltage at the DC CENTER TAP is 11.7 Vdc for an input of 12.0 Vdc. The primary current in dc operation is monitored on Switcher board A6.

Table 8-1. Control Logic Functions

| INPUTS | | | OUTPUTS | | | | | | |
|---|---|---|---|---|---|---|---|---|---|
| $\overline{\text{PWR ON}}$ | $\overline{\text{PWR OFF}}$ | AC VOLTAGE SENSE | DEAD TIME | PULSE WIDTH MODULATOR | AC DRIVER | DC DRIVER | AC LED DRIVER | DC LED DRIVER | $\overline{\text{RELAY ON}}$ |
| HIGH | HIGH | HIGH | 2 µSEC | OFF | OFF | OFF | ON | OFF | HIGH |
| HIGH | HIGH | LOW | 0.5 µSEC | OFF | OFF | OFF | OFF | ON | LOW |
| HIGH | LOW | HIGH | 2 µSEC | OFF | OFF | OFF | ON | OFF | HIGH |
| HIGH | LOW | LOW | 0.5 µSEC | OFF | OFF | OFF | OFF | OFF | HIGH |
| LOW | HIGH | HIGH | 2 µSEC | ON | ON | OFF | ON | OFF | HIGH |
| LOW | HIGH | LOW | 0.5 µSEC | ON | OFF | ON | OFF | ON | LOW |
| LOW | LOW | HIGH | INVALID STATE | | | | | | |
| LOW | LOW | LOW | INVALID STATE | | | | | | |

36930-124

#### 8.2.3.4 Outputs

The secondary-winding outputs of the chopping transformer are all full-wave center-tapped rectified. Each of these outputs is filtered by an LC low-pass filter. The output voltages are listed in Table 8-2. These voltages are specified when the +5V output is adjusted for 5.2V ± 1 percent. This adjustment is located at R6 on Control board A4. The +33V and −5V outputs are protected against overvoltage by this board's zener diodes, VR1 and VR2. The +5V output is protected against overvoltage by a zener diode (VR3) on the Battery Charger board (A3). The +12V and −12V outputs are protected against overvoltage by a comparator (U7) on the Control board, which shuts down the power supply when it detects an overvoltage.

Table 8-2. Output Voltages

| Output | Voltage (Volts) |
|---|---|
| +5V | +5.2 ± 1% |
| −5V | −5.2 ± 5% |
| +12V | +12.4 ± 5% |
| −12V | −12.4 ± 5% |
| +33V | +31 ± 5% |
| +110V | +110 ± 5% |
| −110V | −110 ± 5% |

### 8.2.4 SWITCHER BOARD (A6)

#### 8.2.4.1 General

The Switcher board contains the main switching transistors for the ac off-line and low-voltage dc-switching converters. The A6 board also contains the dc-input filter, which provides filtered dc to the DC BUS, the DC CENTER TAP, and the ac/dc relay.

A schematic of the Switcher board is shown at the end of this section in Figure 8-10, the printed wiring board assembly and parts list in Figure 8-11, and the assembly and parts list in Figure 8-12.

#### 8.2.4.2 AC/DC Relay

Relay K1 switches either the DC CENTER TAP signal to the dc primary of the chopping transformer for dc operation, or the XFMR DC DR signal to the primary for ac operation. For dc operation, the dc input is applied to voltage regulator U1, which will energize relay K1 when the Control board's RELAY ON input line goes low. For ac operation, the RELAY ON line is either floating or pulled high, which disables regulator U1 and relay K1. AC operation will always override dc operation.

#### 8.2.4.3 DC Switches

Field-effect transistors Q3 and Q4 are the dc-operation switches, connected in a push-pull configuration. These transistors are driven by complementary, pulse-width-modulated signals (DC DRIVE and DC DRIVE) coming from the Control board. The frequency of the signals is 40 kHz, with a dead time between the signals of greater than 0.5 µsec. The current being switched in the primary of the chopping transformer is monitored by resistor R20.

#### 8.2.4.4 AC Switches

Field-effect transistors Q1 and Q2 are the ac-operation switches, connected in a half-bridge configuration. AC DRIVE and AC DRIVE, the complementary, pulse-width-modulated signals coming from the Control board, drive the ac switches via transformer T. The frequency of the drive signal is 40 kHz, with a dead time of greater than 2 µsec. The rectified and filtered ac input, $V_{ac}+$ and $V_{ac}-$, is further filtered by LC filters L2, C3, C12 and L3, C4, C13. This signal is connected to the ac switches.

### 8.2.5 REAR PANEL

The rear panel contains the ac line filter, the dc and ac input fuse, the 110/220 switch, and the external dc-input connector. The System Motherboard contains the line transient protectors, neon bulbs (NE1 and NE2) and varistors (VR1 and VR2).

*Figure 8-3. Printed Wiring Board Assembly and Parts List*

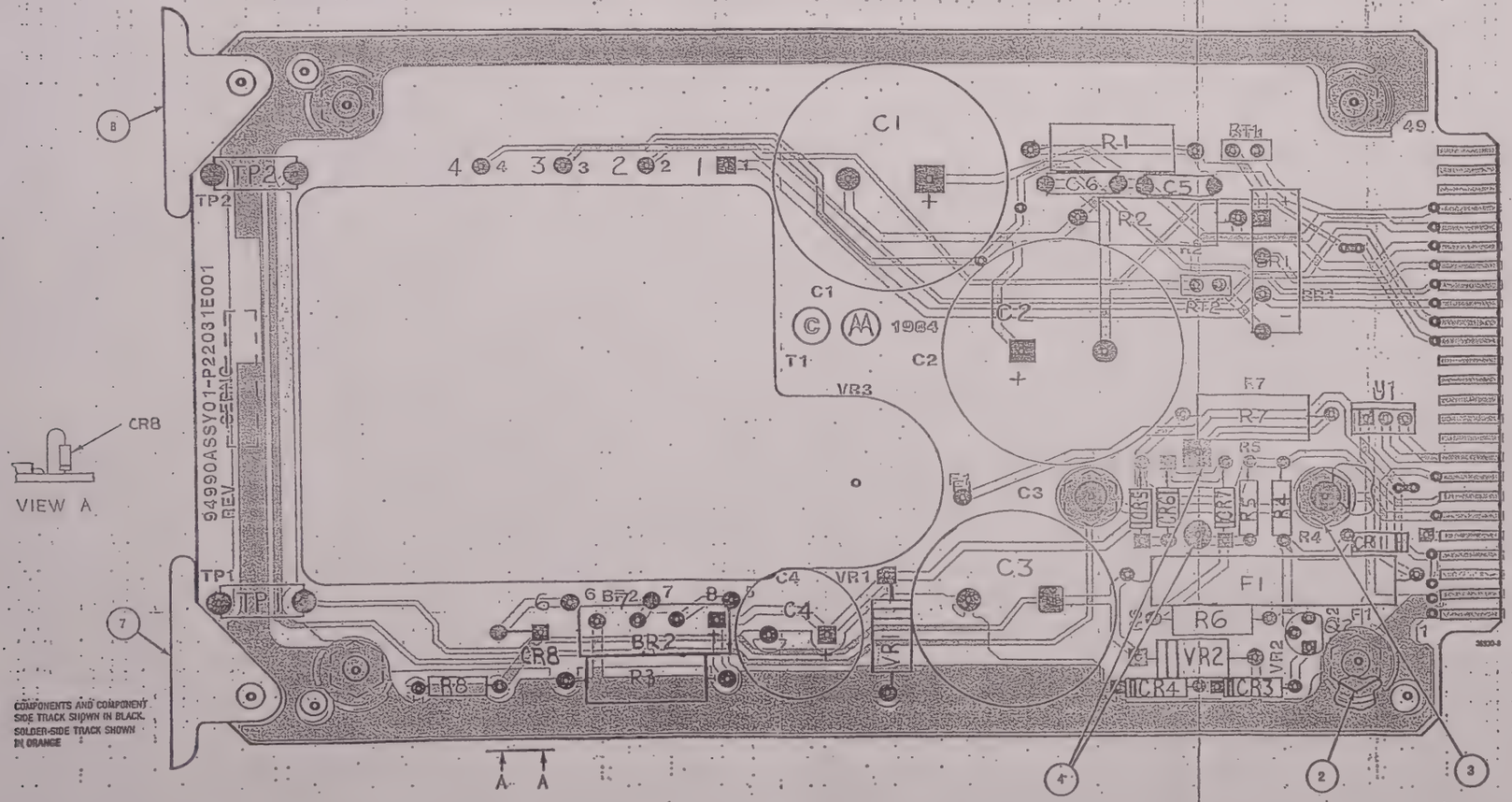


**BATTERY CHARGER BOARD (A3)**

**RTP-1008A**

| Find No. | Qty. Req. | Part No. | Nomenclature | Part Value |
|---|---|---|---|---|
| 002 | 4 | 43-80375B31 | SPACER, SWAGE | |
| 003 | 2 | 43-80375B32 | SPACER, SWAGE | |
| 004 | 2 | 03-80375B22 | RECEPTACLE, COMPONENT | |
| 007 | 1 | 45-80339B28 | CARD EJECTOR | |
| 008 | 1 | 45-80339B35 | CARD EJECTOR | MARKED |
| BR001 | 1 | 48-80339B94 | BRIDGE RECTIFIER | 600V-6A |
| BR002 | 1 | 48-80339B93 | BRIDGE RECTIFIER | |
| C001 | 1 | 23-80343B63 | CAPACITOR | 330UF-250 |
| C002 | 1 | 23-80343B63 | CAPACITOR | 330UF-250 |
| C003 | 1 | 23-80341B09 | CAPACITOR | 3300UF-50V |
| C004 | 1 | 23-80341B20 | CAPACITOR | 470UF-30-63 |
| C005 | 1 | 08-80343B11 | CAPACITOR | 0.01UF-10-400 |
| C006 | 1 | 08-80343B11 | CAPACITOR | 0.01UF-10-400 |
| CR001 | 1 | 48-84463K02 | DIODE | |
| CR003 | 1 | 48-84463K02 | DIODE | |
| CR004 | 1 | 48-84463K02 | DIODE | |
| CR005 | 1 | 48-82466H13 | DIODE | |
| CR006 | 1 | 48-82466H13 | DIODE | |
| CR007 | 1 | 48-82466H13 | DIODE | |
| CR008 | 1 | 48-80343B22 | DIODE,SCHOTTKY,SB580 | 80V |
| F001 | 1 | 65-80342D92 | FUSE | |
| Q002 | 1 | 48-80345A51 | TRANSISTOR | |
| R001 | 1 | 06-00126A93 | RESISTOR | 68K-S-1 |
| R002 | 1 | 06-00126A93 | RESISTOR | 68K-S-1 |
| R003 | 1 | 06-00126A65 | RESISTOR | 4700-S-1 |
| R004 | 1 | 06-11009C80 | RESISTOR | 20K-S-1/4 |
| R005 | 1 | 06-11009C73 | RESISTOR | 10K-S-1/4 |
| R006 | 1 | 06-11045A61 | RESISTOR | 3.2K-S-1/2 |
| R007 | 1 | 06-80370A44 | RESISTOR | 0.499-1-3 |
| R008 | 1 | 06-11009C73 | RESISTOR | 10K-S-1/4 |
| RT001 | 1 | 06-80342B85 | THERMISTOR | |
| RT002 | 1 | 06-80342B85 | THERMISTOR | |
| TP001 | 1 | 03-80331A80 | JACK | WHITE |
| TP002 | 1 | 03-80331A88 | JACK | WHITE |
| U001 | 1 | 51-80340B27 | INTEGRATED CIRCUIT | |
| VR001 | 1 | 48-80342B21 | DIODE,ZENER | |
| VR002 | 1 | 48-80342B21 | DIODE,ZENER | |

LOW-VOLTAGE POWER SUPPLY
BATTERY CHARGER BOARD (A3)
(RTP-1008A)
*Figure 8-4. Assembly and Parts List*

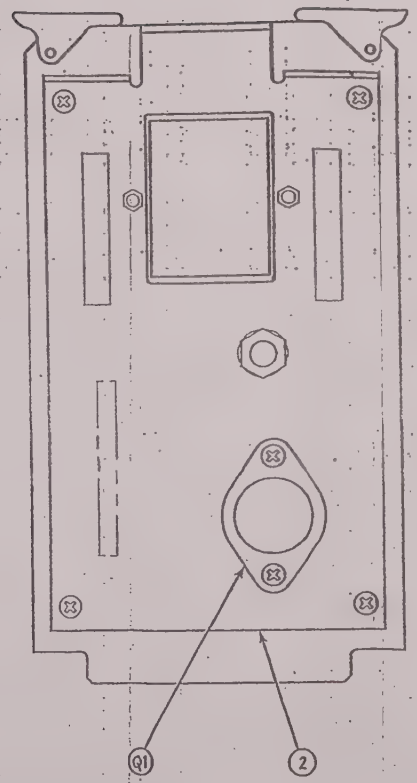


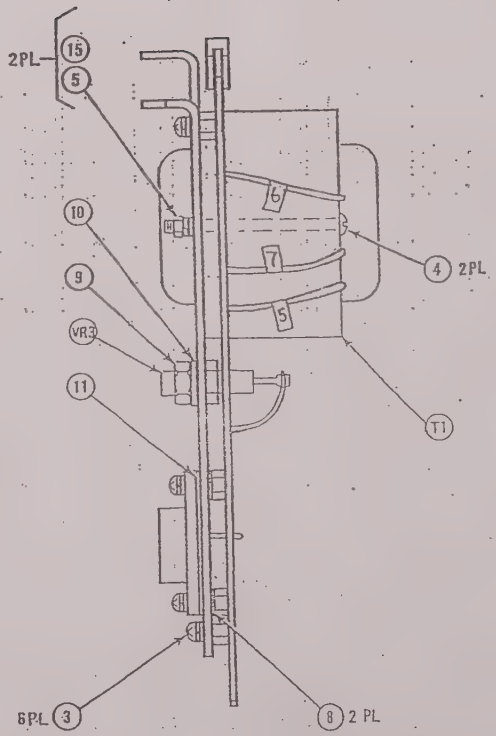


36930-17

| Find No. | Qty. Req. | Part No. | Nomenclature | Part Value |
|---|---|---|---|---|
| 002 | 1 | 07-80344B99 | BRACKET, TRANSFORMER MOUNT | |
| 003 | 6 | 03-138148 | SCREW, PH W/CAPT LOCK WASHER | 4-40X.375 |
| 004 | 2 | 03-80342B30 | SCREW | .1120-40X1.750 |
| 005 | 2 | 04-7667 | WASHER, LOCK | .112 |
| 008 | 2 | 03-80375B11 | WASHER, NYLON SHOULDER | |
| 009 | 1 | 02-80375B36 | NUT | |
| 010 | 1 | 04-80375B35 | WASHER, LOCK | |
| 011 | 1 | 14-80370A92 | INSULATOR, BREQUIST | |
| 015 | 2 | 02-120465 | NUT | .112-40 |
| Q 001 | 1 | 48-80368A89 | TRANSISTOR, PNP | |
| T 001 | 1 | 25-80342B55 | TRANSFORMER | |
| VR003 | 1 | 48-80342B15 | DIODE | |

## LOW-VOLTAGE POWER SUPPLY CONTROL BOARD (A4)

(RTP-1009A)

*Figure 8-5. Block Diagram*

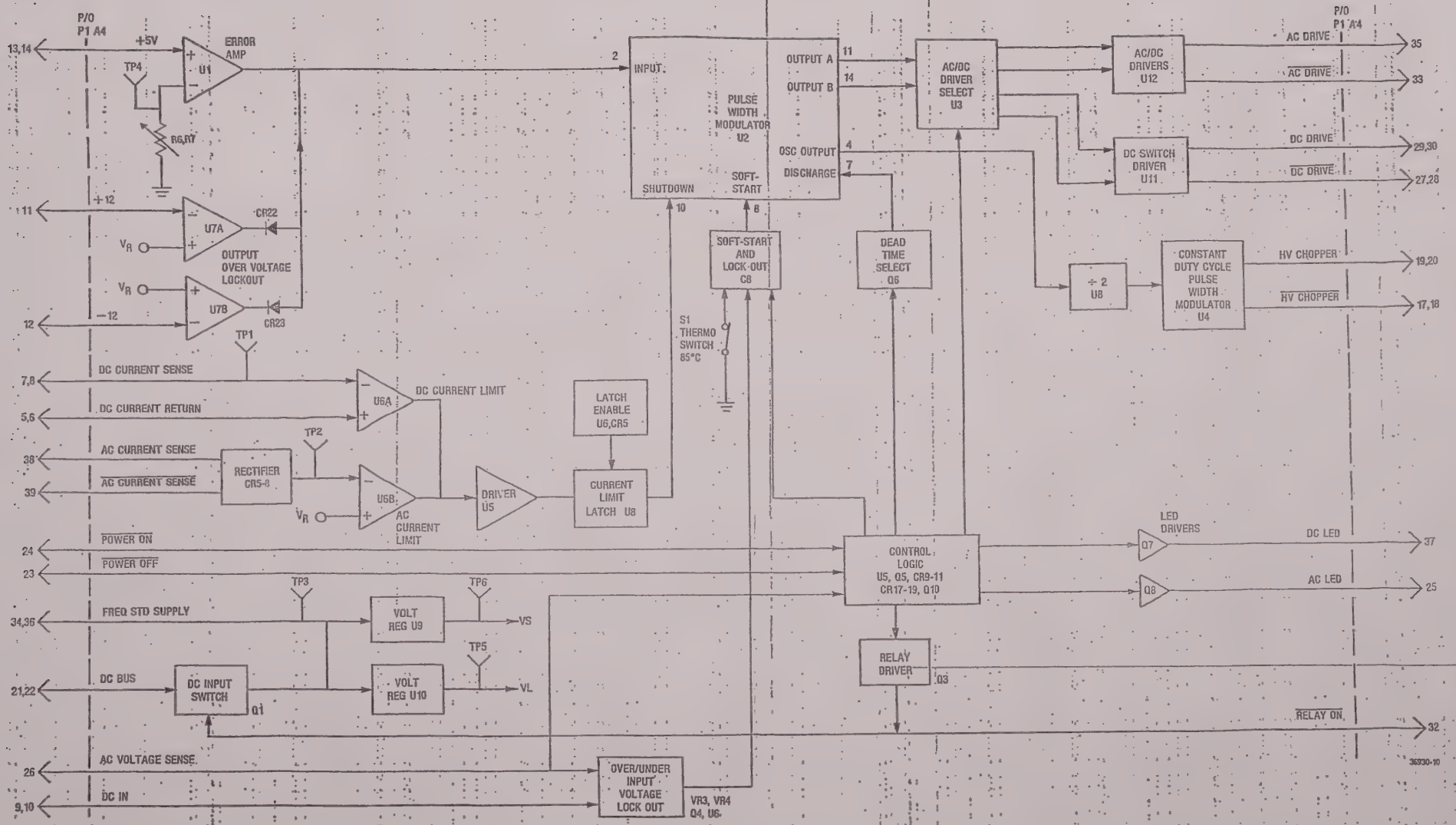

on the Wideband Amplifier controls the level (1 MHz to 1 GHz), and diodes CR6 and CR7 are switched into amplifiers U4 and U5, respectively. These diodes, when switched on, reduce the low-frequency gain of U4 and U5, keeping the ALC loop stable. In LO-band mode, 0.01 to 1 MHz, the VCA on the Wideband Amplifier is set to minimum attenuation by U9, and the output level is controlled by a VCA in the RF Synthesizer. This VCA is controlled by the 0.01 to 1 AGC output of the Wideband Amplifier. Also, during LO-band mode, C30 is switched into the detector circuit. This increases the detector time constant so that the detector operates properly at lower frequencies.

Switching of CR6, CR7, CR9 is controlled by comparators on U6.

#### *17.2.2.2.6 RF-Switching*

In generate mode, the output of the Wideband Amplifier is switched by relay K1 to the ATTENUATOR OUT/IN port. This signal then goes through the step attenuator and to the Wattmeter board where it is switched to either the Antenna port or the RF In/Out port. The operator can select the Antenna or RF In/Out port by pulling out or pushing in the variable RF Level control on the front panel.

### 17.2.2.3 Monitor Mode

In monitor mode, the MON + DSB/GEN input is taken high. This switches a fixed reference into summing amplifier U8, which is set by R58, resulting in a fixed local-oscillator drive level out of Q7. This also energizes relay K1, causing mixer U10 to mix the monitor input from the ATTENUATOR OUT/IN port with the local-oscillator signal.

A portion of the local-oscillator output is sent to the Duplex Generator (A17A3) through the L.O. OFFSET OSC OUT port. The output of mixer U10 is sent through the 20-MHz low-pass filter and then to the Receiver through the 10.7 MHz IF OUT port.

### 17.2.2.4 Double Sideband-Suppressed Carrier (DSBSC) Mode

For DSBSC mode, the Wideband Amplifier is configured as in the monitor mode, except that modulation is applied to the DSBSC MOD input through the isolation network to mixer U10. The resulting DSBSC output is coupled through relay K1, to the ATTENUATOR OUT/IN port.

## 17.2.3 DUPLEX GENERATOR BOARD (A17A3)

### 17.2.3.1 General

The Duplex Generator board provides an RF output whose frequency is offset from the Receiver's center frequency by either a fixed 45 MHz or an adjustable 0 to 10 MHz in 5-kHz steps. The 45-MHz offset is obtained by mixing the local-oscillator signal from the Wideband Amplifier (L.O. OFFSET), which is offset by 10.7 MHz from the desired Receiver signal, with a 34.3-MHz signal generated by a phase-locked-loop (PLL). The 0 to 10-MHz adjustable offset is obtained by mixing the L.O. OFFSET signal with a 0.7 to 10.7-MHz signal. This signal is generated by mixing the 34.3-MHz PLL with a 35 to 45-MHz PLL.

A block diagram of the Duplex Generator board is shown at the end of the section in Figure 17-10, a schematic in Figure 17-11, and the printed wiring board assembly and parts list in Figure 17-12.

### 17.2.3.2 Phase-Locked-Loop (PLL) Control

The phase-locked-loops on the Duplex Generator board use a PLL integrated circuit (IC). This IC provides digital dividers, control functions, the phase detector, and a reference-frequency oscillator. The reference oscillator is divided-down by the reference divider to set the reference frequency of the PLL. This signal is applied to the phase detector, where it is compared to the output of the divider chain (divide-by-N and divide-by-A). The selection of the dividers (reference, divide-by-N, and divide-by-A) can be programmed by using either hard wiring or serial data lines. The serial-data-programmable IC provides two latched open-drain outputs that can be used for external switching.

### 17.2.3.3 35 to 45-MHz PLL

#### *17.2.3.3.1 General*

The 35 to 45-MHz PLL consists of a serial-input PLL IC, a loop filter, a voltage-controlled oscillator (VCO), an amplifier, and a two-modulus pre-scaler.

The reference oscillator on the PLL IC (U2) uses crystal Y1 to generate a 10.24-MHz source. The reference divider on U2 divides this signal by 2048, providing a reference frequency of 5 kHz. The phase detector then compares this signal to the divided-down VCO output coming from the divide-by-N. The PLL uses a divide-by-32/33, two-modulus pre-scaler (U4) which, in conjunction with dividers N and A, divides the VCO output of 35 to 45 MHz down to 5 kHz. The two-output phase detector is connected to the loop filter.

#### *17.2.3.3.2 Loop Filter*

Loop filter U6 sets the bandwidth and stability of the loop and attenuates the reference-frequency components coming from the phase detector. The 3-dB bandwidth of the 35 to 45-MHz loop is 22 Hz. The loop filter incorporates a lead-lag network (R29, R30, and C38) to reduce the resistor values of R21-R25. This allows for a faster loop-lock time. Diodes CR7 and CR8 help the operational amplifier (U6) slew the large-value capacitor (C38). The output of the loop filter tunes the

VCO frequency to the value needed to maintain phase lock.

*17.2.3.3.3 VCO and Amplifier*

The 35 to 45-MHz VCO (Q3 and Q4) is a series-tuned oscillator that resonates varactor diodes CR5 and CR6 with the inductance in the 26 turns of transformer T1. Transistor Q7 is the VCO ON/OFF switch which is controlled by the PLL IC (U1) via the SW1 output. The amplifier (Q5) following the VCO provides an output of +7 dBm. This signal is attenuated by R39 and R40 before going to the two-modulus prescaler, U4.

17.2.3.4 34.3-MHz PLL

*17.2.3.4.1 General*

The 34.3-MHz PLL has the same components as the 35 to 45-MHz PLL, except that the PLL IC (U1) is hard-wired to provide one frequency of operation, 34.3 MHz. The PLL IC (U1) uses the 10.24-MHz source from U2. The reference divider on U1 divides this 10.24-MHz signal by 512 to provide a reference frequency of 20 kHz. As with the 35 to 45-MHz PLL, the phase detector then compares this signal to the divided-down VCO output coming from the divide-by-N. The PLL uses a divide-by-32/33, two-modulus prescaler (U3) which, in conjunction with dividers N and A, divides the VCO output of 34.3 MHz down to 20 kHz. The two-output phase detector is connected to the loop filter.

*17.2.3.4.2 Loop Filter*

Loop filter U5 sets the bandwidth and stability of the loop and attenuates the reference-frequency component coming from the phase detector. The 3-dB bandwidth of the 34.3-MHz PLL is 5 Hz. The loop filter incorporates a lead-lag network (R8, R73, and C85) to reduce the resistor values of R1-R4. This allows for a faster loop-lock time. Diodes CR14 and CR15 help the operational amplifier (U5) slew the large-value capacitor (C85). The output of the loop filter tunes the VCO frequency to the value needed to maintain phase lock.

*17.3.3.4.3 VCO and Amplifier*

The 34.3-MHz VCO (Q1) is a Colpitts-type oscillator that resonates CR2, CR3, C10, C11, C47, and C68 with the inductance of transformer T1. Capacitor C68 is adjusted to provide a tuning voltage of 8 to 10V at TP1 when the loop is locked. Transistor Q8 is the VCO ON/OFF switch, which is controlled by PLL IC U1 via the SW2 output. The amplifier (Q2) following the VCO provides an output of +7 dB. This signal is attenuated by R37 and R38 before going to the two-modulus pre-scaler, U3.

17.2.3.5 Offset Selection

The 45-MHz offset is generated by routing the 34.3-MHz PLL through relay U7 (which is controlled by the SW1 output on U2), to the L.O. offset-mixer, U10. Here the 34.3-MHz signal is mixed with the L.O. OFFSET signal coming from the Wideband Amplifier board. Amplifier U14 provides a gain of 8 dBm to the −20 dBm L.O. OFFSET input signal. The output of the L.O. mixer (U10) is routed through relay U12 to the Duplex output port, J6. To generate the 0 to 10-MHz offset, mixer U9 mixes the 34.3-MHz PLL with the 35 to 45-MHz PLL. The output of mixer U9 is low-pass filtered by C54, C56, and L8 to obtain the difference product. This signal is amplified by amplifier Q6 from approximately 0 dBm to +7 dBm. The output of amplifier Q6 is applied to the L.O. offset mixer, U10, where it is mixed with the L.O. OFFSET signal and routed to the Duplex output port, J6.

17.2.3.6 Modulation

FM modulation of the Duplex Generator is accomplished by directly modulating the VCO in the 34.3-MHz PLL. The sensitivity of this input port is adjusted by R69 to 5 kHz/V. The frequency response of the modulation input is 1 Hz to 20 kHz.

17.2.3.7 Board Control

The Duplex Generator board is controlled by PLL IC U2, which uses the RF control bus coming from the Processor Interface board (A11). (See the A11 section, paragraph 13.2.1.3 for a description of this bus.) The PLL IC uses the last 19 bits of the RF data bus. The first two bits of these 19 bits control the two output switches (SW1 and SW2), as shown in Table 17-1. The next ten bits control the divide-by-N, and the last seven bits control the divide-by-A.

Table 17-1. Switch Control

| Switch Position | | Result |
|---|---|---|
| SW1 | SW2 | |
| 0 | 0 | 0 to 10-MHz OFFSET |
| 0 | 1 | Not Allowed |
| 1 | 0 | 45-MHz OFFSET |
| 1 | 1 | Duplex Generator OFF |

Table 17-2. RF Input Module-Wirelist

| 1 | 2 | 3 | 4 | 5 | 6 | 7 | 8 | 9 |
|---|---|---|---|---|---|---|---|---|
| WIRE NO. | COLOR SIZE AWG | WIRE RUNS FROM | NOTE OR VIEW | TO | NOTE OR VIEW | FUNCTION ROUTING REMARKS | APPROX LENGTH | USE FIND NO. |
| | | A4-E1 | | C10 | | +5 Volts | | |
| | | A4-E2 | | | | SPARE | | |
| | | A4-E3 | | C11 | | +33 Volts | | |
| | | A4-E4 | | A4S1 Center Pin | | OFFSET ON/OFF | | |
| | | A4-E5 | | C8 | | OFFSET ATTEN EN | | |
| | | A4-E6 | | W7 | | DATA CLOCK | | |
| | | A4-E7 | | W5 | | DATA LATCH | | |
| | | A4-E8 | | W6 | | OFFSET DATA | | |
| | | A4-E9 | | C5 | | ANT ENABLE | | |
| | | A4-E10 | | C2 | | RF INPUT PWR | | |
| | | A4-E11 | | E1 | | GND | | |
| | | A4-E12 | | E3 | | GND | | |
| | | A4-E13 | | FL4 | | .01-1 MHz AGC | | |
| | | A4-E14 | | FL5 | | AM MOD +DC REF. | | |
| | | A4-E15 | | C6 | | EXT FWD PWR | | |
| | | A4-E16 | | FL3 | | WB AMP HI/LO | | |
| | | A4-E17 | | C7 | | EXT RFL PWR | | |
| | | A4-E18 | | W8 | | OFFSET MOD | | |
| | | A4-E19 | | FL8 | | DSBSC MOD | | |
| | | A4-E-20 | | C4 | | OVERTEMP | | |
| | | A4-E21 | | FL6 | | CARRIER + MOD LVL | | |
| | | A4-E22 | | FL2 | | MON + DSB/GEN | | |
| | | A4-E23 | | FL1 | | +12V | | |
| | | A4-E24 | | FL7 | | -12V | | |
| | | A4-E25 | | S1-4 | | RF ATTEN 130 | | |
| | | A4-E26 | | S1-5 | | RF ATTEN 120 | | |
| | | A4-E27 | | S1-6 | | RF ATTEN 110 | | |
| | | A4-E28 | | S1-7 | | RF ATTEN 100 | | |
| | | A4-E29 | | S1-8 | | RF ATTEN 90 | | |
| | | A4-E30 | | S1-9 | | RF ATTEN 80 | | |
| | | A4-E31 | | S1-10 | | RF ATTEN 70 | | |
| | | A4-E32 | | S1-11 | | RF ATTEN 60 | | |
| | | A4-E33 | | S1-12 | | RF ATTEN 50 | | |
| | | A4-E34 | | S1-13 | | RF ATTEN 40 | | |
| | | A4-E35 | | S1-14 | | RF ATTEN 30 | | |
| | | A4-E36 | | S1-1 | | RF ATTEN 20 | | |
| | | A4-E37 | | S1-2 | | RF ATTEN 10 | | |
| | | A4-E38 | | S1-3 | | RF ATTEN 0 | | |
| | | A4-E39 | | E2 | | GND | | |
| | | A4-E40 | | | | SPARE | | |

Table 17-2. RF Input Module–Wirelist (Cont)

| 1 | 2 | 3 | 4 | 5 | 6 | 7 | 8 | 9 |
|---|---|---|---|---|---|---|---|---|
| WIRE NO. | COLOR / SIZE AWG | WIRE RUNS FROM | NOTE OR VIEW | WIRE RUNS TO | NOTE OR VIEW | FUNCTION ROUTING REMARKS | APPROX LENGTH | USE FIND NO. |
| | | C10 | | S1-15 | | +5 Volts | | |
| | | C9 | | FL1 | | +12 | | |
| | | C9 | | C3 | | +12 | | |
| | | FL7 | | C1 | | -12 | | |
| | | E3 | | A4S1 TOP PIN | | GND | | |

*Figure 17-1. Block Diagram*

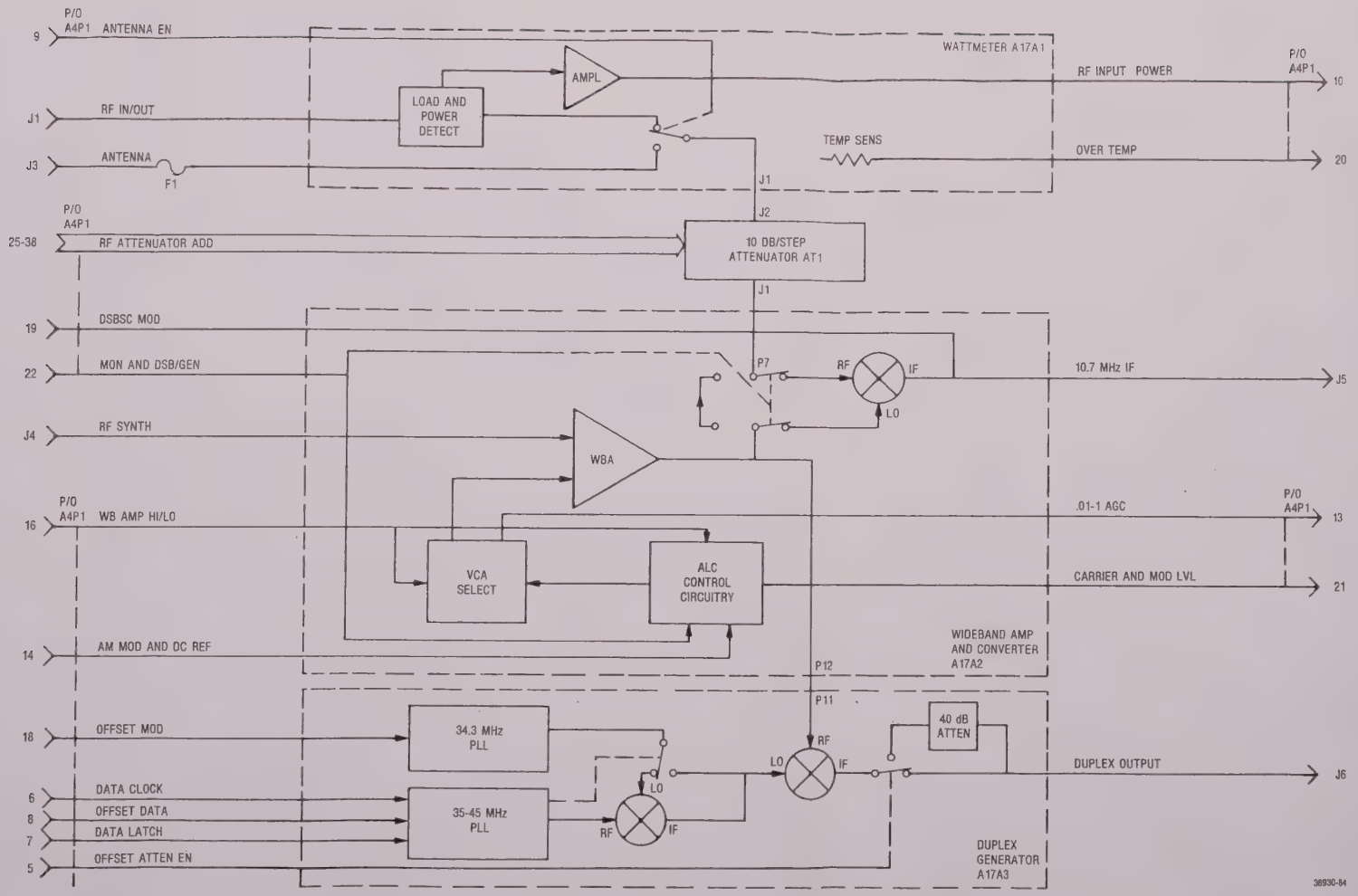

## RF INPUT MODULE (A17)

(RTL-1021A)

*Figure 17-2. Interconnect Diagram*

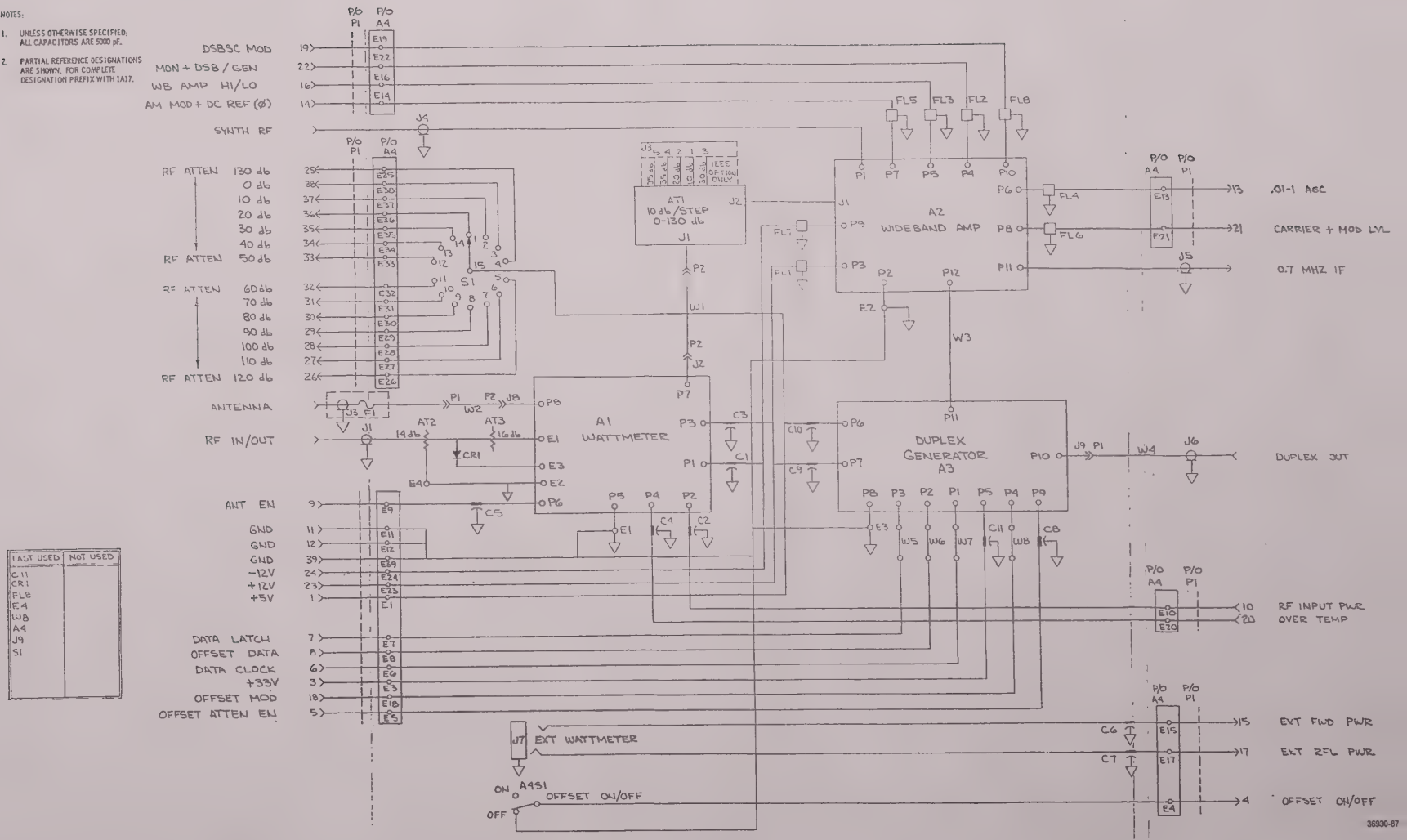

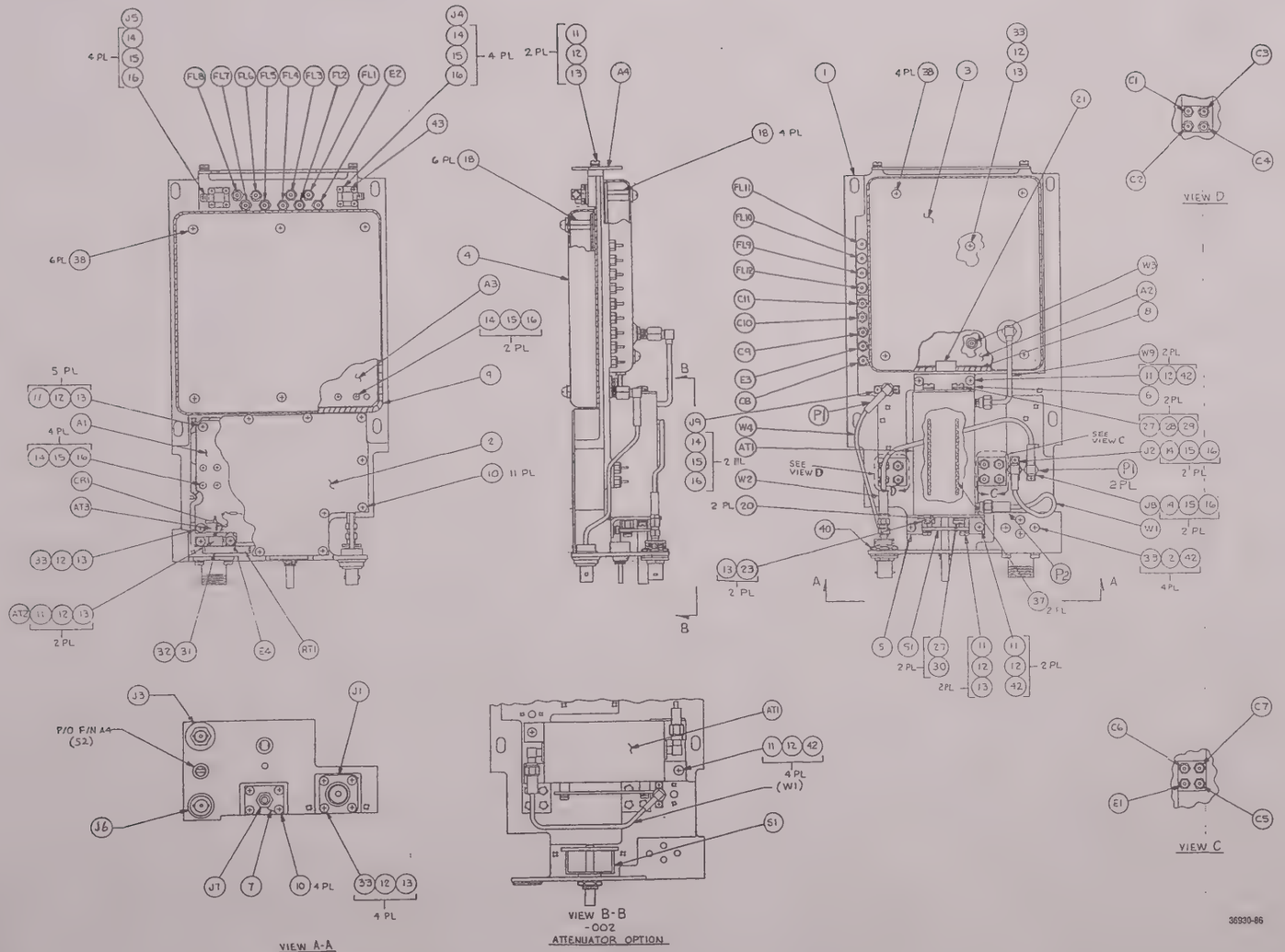


## RF INPUT MODULE (A17)

(RTL-1021A)

*Figure 17-3a. Assembly and Parts List (Sheet 1 of 2)*

| Find No. | Qty. Req. | Part No. | Nomenclature | Part Value |
|---|---|---|---|---|
| 002 | 1 | 15-80344B77 | COVER, WATTMETER ASSY | |
| 003 | 1 | 15-80344B76 | COVER, WB AMPLIFIER ASSEMBLY | |
| 004 | 1 | 15-80344B73 | COVER, DUPLEX GEN. ASSEMBLY | |
| 005 | 1 | 07-80344B81 | BRACKET, ATTENUATOR FRONT | |
| 006 | 1 | 07-80334B80 | BRACKET, ATTENUATOR REAR | |
| 007 | 1 | 07-30844B82 | BRACKET, CONNECTOR MOUNT | |
| 008 | 1 | 32-80342B94 | GASKET,EMI | |
| 009 | 1 | 32-80342B95 | GASKET,EMI | |
| 010 | 15 | 03-139461 | SCREW | .112-40X.250 |
| 011 | 19 | 03-140011 | SCREW | .112-40X.250 |
| 012 | 27 | 04-9777 | WASHER, LOCK | .112 |
| 013 | 19 | 04-140358 | WASHER | .112 |
| 014 | 20 | 03-140041 | SCREW | .086-56X.250 |
| 015 | 20 | 04-400139 | WASHER, LOCK | .086 |
| 016 | 20 | 04-80375B52 | WASHER | .086 |
| 018 | 10 | 43-80375B21 | STANDOFF, MALE-FEMALE | |
| 020 | 2 | 03-138374 | SCREW | .112-40X.187 |
| 023 | 2 | 43-80342B49 | STANDOFF | |
| 027 | 4 | 03-139749 | SCREW | .138-32X.250 |
| 028 | 2 | 04-9795 | WASHER, LOCK | .138 |
| 029 | 2 | 04-116786 | WASHER | .138 |
| 030 | 2 | 04-2645 | WASHER, EXTERNAL LOCK #6 | .138 |
| 031 | 1 | 26-80344B76 | HEATSINK, ATTENUATOR | |
| 033 | 10 | 03-139599 | SCREW | .112-40X.312 |
| 035 | 1 | 84-80344B74 | PWB, FLEX, RF INTERCONN | |
| 037 | AR | 32-80344B91 | GASKET, MESH | |
| 038 | 10 | 03-129041 | SCREW, PH W/CAPT LOCK WASHER | 4-40X.250 |
| 040 | 1 | 04-2635 | WASHER, LOCK | .500 |
| 042 | 8 | 04-490774 | WASHER | |
| 043 | 1 | 32-80375B13 | GASKET, SMA | |
| A 001 | 1 | RTL-4158A | WATT METER ASSY(A17A1) | |
| A 002 | 1 | RTL-4156A | WIDE BND AMPL ASSY(A17A2) | |
| A 003 | 1 | RTL-4157A | DUPLEX GEN ASSY(A17A3) | |
| A 004 | 1 | 01-80344B92 | PWB, INTERCONNECT | |
| AT001 | 1 | 01-80343B83 | ATTENUATOR | |
| AT002 | 1 | 17-80377A85 | ATTENUATOR,POWER | |
| AT003 | 1 | 01-80343B81 | ATTENUATOR,16DB | |
| C 001 | 1 | 21-80342B51 | CAPACITOR | 5000PF-6MV-500 |
| C 002 | 1 | 21-80342B51 | CAPACITOR | 5000PF-6MV-500 |
| C 003 | 1 | 21-80342B51 | CAPACITOR | 5000PF-6MV-500 |
| C 004 | 1 | 21-80342B51 | CAPACITOR | 5000PF-6MV-500 |
| C 005 | 1 | 21-80342B51 | CAPACITOR | 5000PF-6MV-500 |
| C 006 | 1 | 21-80342B51 | CAPACITOR | 5000PF-6MV-500 |
| C 007 | 1 | 21-80342B51 | CAPACITOR | 5000PF-6MV-500 |
| C 008 | 1 | 21-80342B51 | CAPACITOR | 5000PF-6MV-500 |
| C 009 | 1 | 21-80342B51 | CAPACITOR | 5000PF-6MV-500 |
| C 010 | 1 | 21-80342B51 | CAPACITOR | 5000PF-6MV-500 |
| C 011 | 1 | 21-80342B51 | CAPACITOR | 5000PF-6MV-500 |
| CR001 | 1 | 48-87643C01 | DIODE | |
| FL001 | 1 | 91-80342B25 | FILTER | |
| FL002 | 1 | 91-80342B25 | FILTER | |
| FL003 | 1 | 91-80342B25 | FILTER | |
| FL004 | 1 | 91-80342B25 | FILTER | |
| FL005 | 1 | 91-80342B25 | FILTER | |
| FL006 | 1 | 91-80342B25 | FILTER | |
| FL007 | 1 | 91-80342B25 | FILTER | |
| FL008 | 1 | 91-80342B25 | FILTER | |
| FL009 | 1 | 91-80342B25 | FILTER | |
| FL010 | 1 | 91-80342B25 | FILTER | |
| FL011 | 1 | 91-80342B25 | FILTER | |
| FL012 | 1 | 91-80342B25 | FILTER | |
| J 001 | 1 | 28-80342B87 | CONNECTOR, MODIFIED | |
| J 002 | 1 | 28-80342B88 | CONNECTOR | MODIFIED |
| J 003 | 1 | 03-80375B27 | CONNECTOR | |
| J 004 | 1 | 28-80342B89 | CONNECTOR | MODIFIED |
| J 005 | 1 | 28-80342B89 | CONNECTOR | MODIFIED |
| J 006 | 1 | 28-80342B90 | CONNECTOR, BNC | |
| J 007 | 1 | 09-80331A70 | CONNECTOR | PHONE JACK |
| J 008 | 1 | 28-80342B88 | CONNECTOR | MODIFIED |
| J 009 | 1 | 28-80342B88 | CONNECTOR | MODIFIED |
| J 010 | 1 | 09-80340B39 | CONNECTOR | |
| P 001 | 3 | 09-80331A75 | CONNECTOR | |
| P 001 | 1 | 09-80331A75 | CONNECTOR | |
| P 002 | 1 | 09-80343B86 | CONNECTOR | |
| R 003 | 1 | 06-00185A21 | RESISTOR | 68-5-1/8 (NOM) |
| RT001 | 1 | 06-80372B71 | THERMISTOR | |
| S 001 | 1 | 40-80335A74 | SWITCH | WAFER |
| S 002 | 1 | 40-80335A80 | SWITCH, TOGGLE | SPDT |
| W 001 | 1 | 30-80344B06 | CABLE ASSEMBLY-W1 | |
| W 002 | 1 | 30-80344B08 | CABLE ASSEMBLY-W2 | ANTENNA/A1 |
| W 003 | 1 | 29-80344B78 | TERMINAL, MODIFIED | |
| W 004 | 1 | 30-80344B09 | CABLE ASSY-W4, DUPLEX/A3 | |
| W 009 | 1 | 30-80344B17 | CABLE ASSEMBLY, W9 | |

### Standard RF Input Kit

| | | | | |
|---|---|---|---|---|
| 001 | 1 | RTL-1021A | RF INPUT MODULE ASSY(A17) | |
| 005 | 1 | 35-80335A88 | KNOB, SKIRTED | |
| 007 | 2 | 04-80335A99 | WASHER | .156 |

## RF INPUT MODULE

### RF INPUT FLEX STANDARD

*Figure 17-3b. Printed Wiring Board Assembly and Parts List (Sheet 2 of 2)*

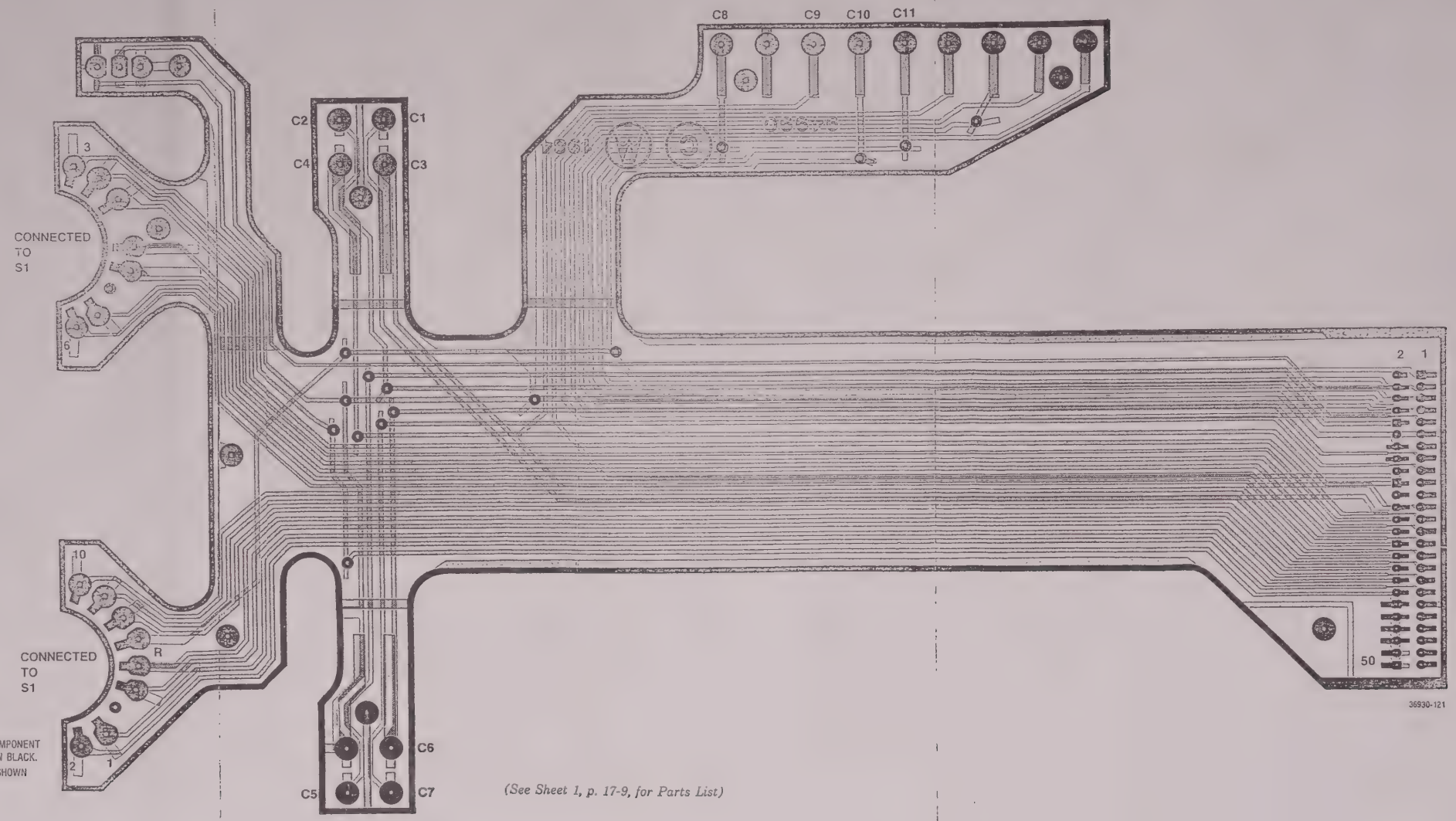


COMPONENTS AND COMPONENT SIDE TRACK SHOWN IN BLACK.
SOLDER-SIDE TRACK SHOWN IN ORANGE

*(See Sheet 1, p. 17-9, for Parts List)*

*Figure 17-4. Block Diagram*

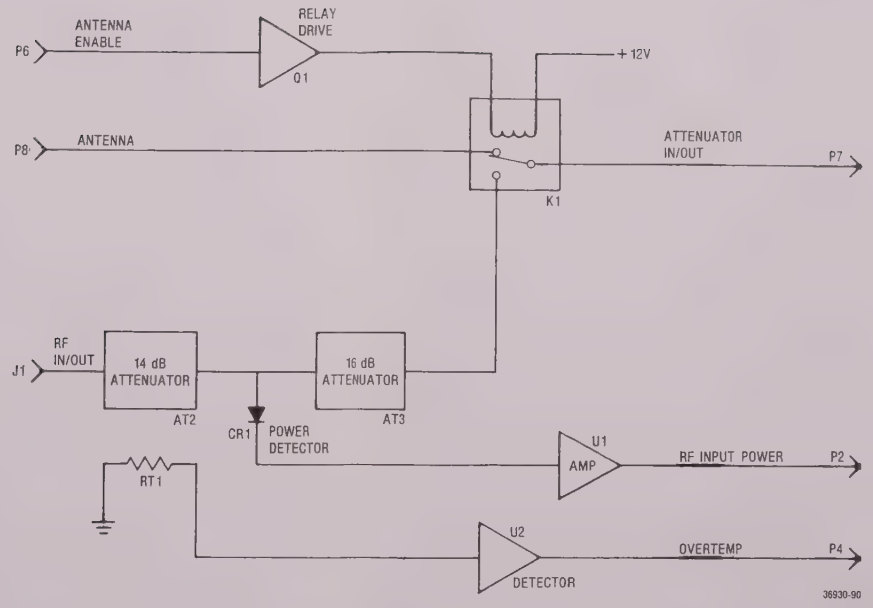

## RF WATTMETER BOARD (A17A1)

(RTL-4158A)

*Figure 17-5. Schematic*

NOTES

1. PARTIAL REFERENCE DESIGNATIONS ARE SHOWN FOR COMPLETE DESIGNATIONS PREFIX WITH 1A17A1, EXCEPT AS NOTED.
2. UNLESS OTHERWISE SPECIFIED
   ALL RESISTORS ARE IN OHMS ± 5 PCT, 1/4 WATT
   ALL CAPACITORS ARE IN UF
   ALL INDUCTORS ARE IN MH.
   ALL VOLTAGES ARE IN DC
3. FOR REFERENCE DRAWINGS REFER TO:
   01-P22170E ASSEMBLY DRAWING
   01-P22280E PRINTED WIRING BOARD ASSEMBLY
   12-P22283E TEST PROCEDURE.
4. PARTS SHOWN TO BE ASSEMBLED AT TEST.

| REF DES | DEVICE | GND | +12 | -12 | NO CONNECT |
|---|---|---|---|---|---|
| U1 | LM324 N | 11 | 4 | 11 | 1,2,3 |
| U2 | LM393 N | 4 | 8 | | 1,2,3 |

| HIGHEST USED | NOT USED |
|---|---|
| C8 | |
| CR3 | CR2, CR1 |
| K1 | |
| L2 | L1 |
| P8 | |
| R30 | R28 |
| RT2 | |
| U2 | |
| VR1 | |

WARNING:
STATIC-SENSITIVE PARTS
HANDLE APPROPRIATELY

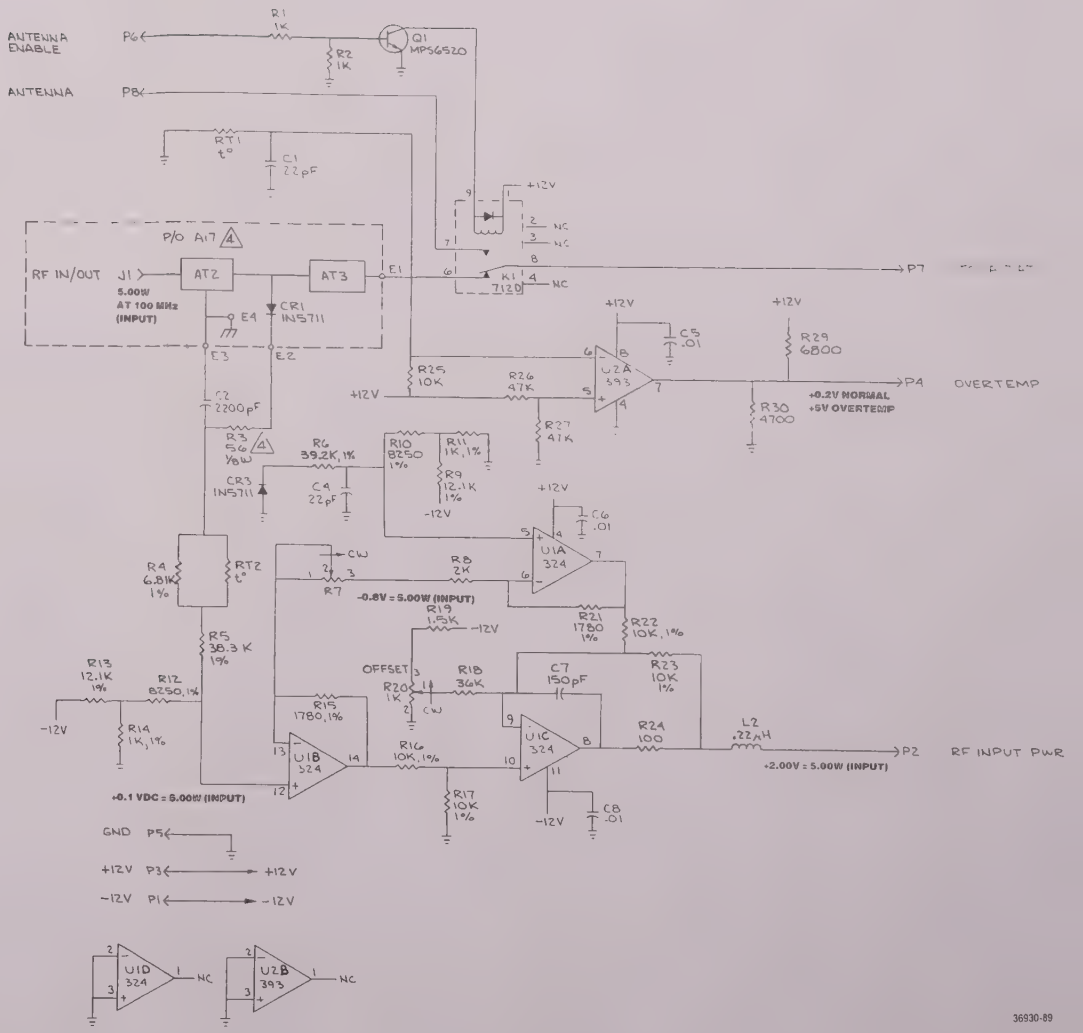

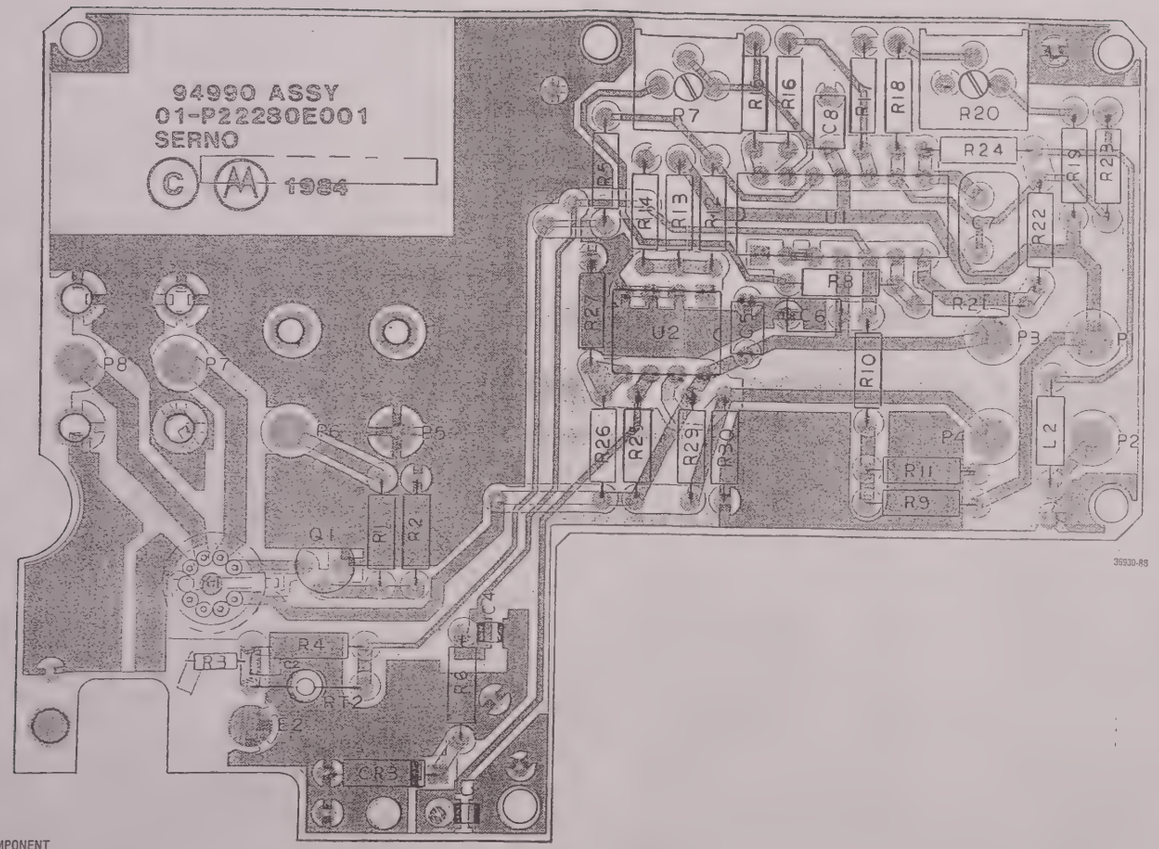


COMPONENTS AND COMPONENT SIDE TRACK SHOWN IN BLACK.

SOLDER-SIDE TRACK SHOWN IN ORANGE

## WATTMETER BOARD (A17A1)
RTL-4158A

| Find No. | Qty. Req. | Part No. | Nomenclature | Part Value |
|---|---|---|---|---|
| C 001 | 1 | 21-80370A14 | CAPACITOR | 22PF-5-100 |
| C 002 | 1 | 21-80370A24 | CAPACITOR | 2200PF-20-100 |
| C 004 | 1 | 21-80370A14 | CAPACITOR | 22PF-5-100 |
| C 005 | 1 | 21-80342B09 | CAPACITOR | .01UF-20-50 |
| C 006 | 1 | 21-80342B09 | CAPACITOR | .01UF-20-50 |
| C 007 | 1 | 21-80369A94 | CAPACITOR | 150PF-5-500 |
| C 008 | 1 | 21-80342B09 | CAPACITOR | .01UF-20-50 |
| CR003 | 1 | 48-87643C01 | DIODE | |
| K 001 | 1 | 80-80343B61 | RELAY | |
| L 002 | 1 | 24-80369A25 | COIL | .22UH |
| P 001 | 1 | 09-80344B25 | RECEPTACLE | |
| P 002 | 1 | 09-80344B25 | RECEPTACLE | |
| P 003 | 1 | 09-80344B25 | RECEPTACLE | |
| P 004 | 1 | 09-80344B25 | RECEPTACLE | |
| P 005 | 1 | 09-80344B25 | RECEPTACLE | |
| P 006 | 1 | 09-80344B25 | RECEPTACLE | |
| P 007 | 1 | 09-80344B25 | RECEPTACLE | |
| P 008 | 1 | 09-80344B25 | RECEPTACLE | |
| Q 001 | 1 | 48-80340B86 | TRANSISTOR | MPS6520 |
| R 001 | 1 | 06-11009C49 | RESISTOR | 1K-5-1/4 |
| R 002 | 1 | 06-11009C49 | RESISTOR | 1K-5-1/4 |
| R 004 | 1 | 06-10621C75 | RESISTOR | 6.81K-1-1/4 |
| R 005 | 1 | 06-10621D48 | RESISTOR | 38.3K-1-1/4 |
| R 006 | 1 | 06-10621D49 | RESISTOR | 39.2K-1-1/4 |
| R 007 | 1 | 18-83452F10 | RESISTOR,VARIABLE | 1K |
| R 008 | 1 | 06-11009C58 | RESISTOR | 2.0K-5-1/4 |
| R 009 | 1 | 06-10621C99 | RESISTOR | 12.1K-1-1/4 |
| R 010 | 1 | 06-10621C83 | RESISTOR | 8.25K-1-1/4 |
| R 011 | 1 | 06-10621B94 | RESISTOR | 1K-1-1/4 |
| R 012 | 1 | 06-10621C83 | RESISTOR | 8.25K-1-1/4 |
| R 013 | 1 | 06-10621C99 | RESISTOR | 12.1K-1-1/4 |
| R 014 | 1 | 06-10621B94 | RESISTOR | 1K-1-1/4 |
| R 015 | 1 | 06-10621C19 | RESISTOR | 1.78K-1-1/4 |
| R 016 | 1 | 06-10621C91 | RESISTOR | 10K-1-1/4 |
| R 017 | 1 | 06-10621C91 | RESISTOR | 10K-1-1/4 |
| R 018 | 1 | 06-11009C86 | RESISTOR | 36K-5-1/4 |
| R 019 | 1 | 06-11009C53 | RESISTOR | 1.5K-5-1/4 |
| R 020 | 1 | 18-83452F10 | RESISTOR,VARIABLE | 1K |
| R 021 | 1 | 06-10621C19 | RESISTOR | 1.78K-1-1/4 |
| R 022 | 1 | 06-10621C91 | RESISTOR | 10K-1-1/4 |
| R 023 | 1 | 06-10621C91 | RESISTOR | 10K-1-1/4 |
| R 024 | 1 | 06-11009C25 | RESISTOR | 100-5-1/4 |
| R 025 | 1 | 06-11009C73 | RESISTOR | 10K-5-1/4 |
| R 026 | 1 | 06-11009C89 | RESISTOR | 47K-5-1/4 |
| R 027 | 1 | 06-11009C89 | RESISTOR | 47K-5-1/4 |
| R 029 | 1 | 06-11009C69 | RESISTOR | 6.8K-5-1/4 |
| R 030 | 1 | 06-11009C65 | RESISTOR | 4.7K-5-1/4 |
| RT002 | 1 | 05-83600K05 | THERMISTOR | |
| U 001 | 1 | 51-80396A16 | INTEGRATED CIRCUIT | LM324N SCREENED |
| U 002 | 1 | 51-80345A10 | INTEGRATED CIRCUIT | LM393N SCREENED |



*Figure 17-6. Printed Wiring Board Assembly and Parts List*

*Figure 17-7. Block Diagram*

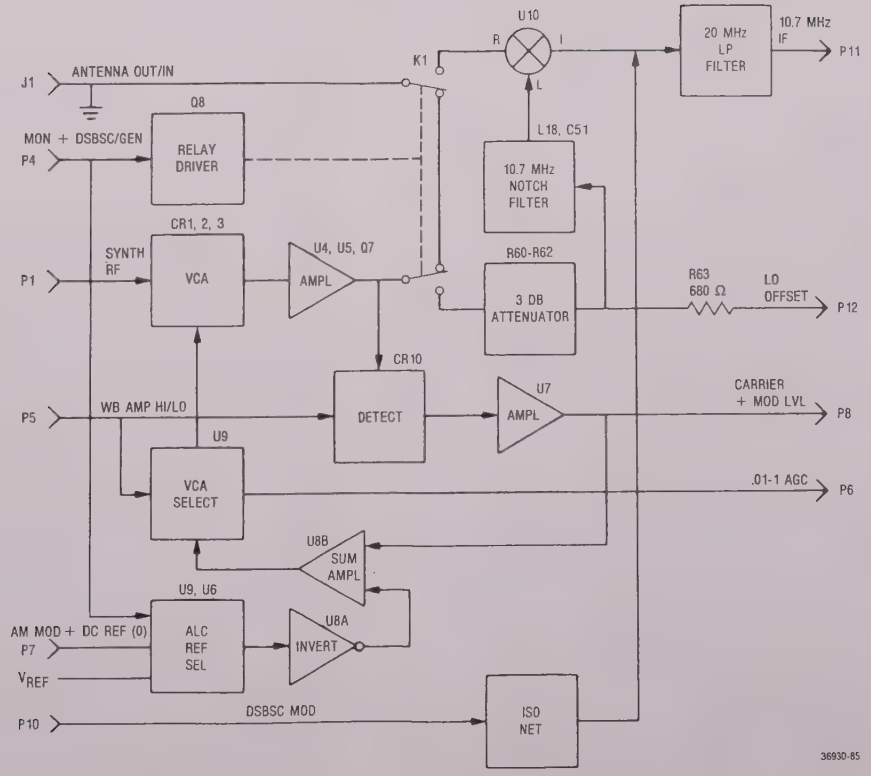

*Figure 17-8. Schematic*

NOTES:

1. PARTIAL REFERENCE DESIGNATIONS ARE SHOWN. FOR COMPLETE DESIGNATIONS PREFIX WITH A7A2.
2. UNLESS OTHERWISE SPECIFIED:
   ALL RESISTORS ARE IN OHMS ± 5 PCT, 1/4 WATT.
   ALL CAPACITORS ARE IN UF.
   ALL INDUCTORS ARE IN UH.
   ALL VOLTAGES ARE IN DC.
3. DEVICE TYPE NUMBER AND CONNECTION NOT SHOWN ON SYMBOL ARE LISTED IN TABLE 1. UNDERLINED PORTION OF TYPE NUMBER IS USED AS A CODE TO IDENTIFY DEVICES ON DIAGRAM.
4. SELECT IN TEST. NOMINAL VALUE SHOWN.
5. FOR REFERENCE DRAWINGS REFER TO:
   01-P22290E ASSEMBLY DRAWING
   12-P22291E TEST PROCEDURE

| REF DES | DEVICE | GND | +V | -V | NO CONNECT |
|---|---|---|---|---|---|
| U1 | MC78M08CTDS | 2 | 1 | | |
| U2 | CA3140E | 4 | 7 | | 1,5,8 |
| U3 | | | | | |
| U4 | GPD321 | 3 | | | |
| U5 | GPD331 | 3 | | | |
| U6 | LM339NDS | | 3 | 12 | |
| U7 | CA3160E | | 7 | | 1,5,8 |
| U8 | CA3240E | | 8 | 4 | |
| U9 | HI-201-5 | 5 | 10,13 | 4 | 12 |
| U10 | TFM-2 | 3 | | | |

| LAST USED | NOT USED |
|---|---|
| C55 | C47,48,49,51 |
| CR18 | CR6,CR12 |
| J1 | |
| K1 | |
| L22 | L4,L13,L18 |
| P12 | |
| Q8 | |
| R72 | R5,49,50,55 |
| U10 | U3 |
| VR3 | VR1 |

WARNING:
STATIC-SENSITIVE PARTS
HANDLE APPROPRIATELY

*Figure 17-9. Printed Wiring Board Assembly and Parts List*

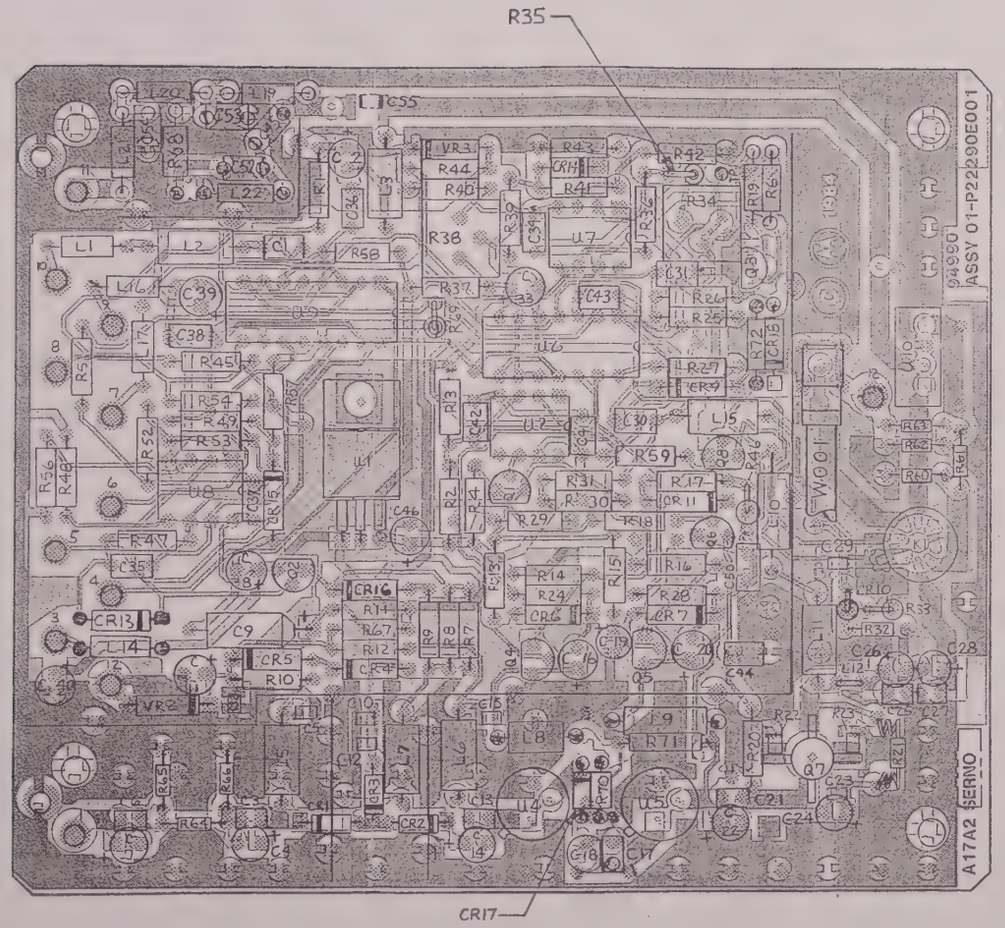


COMPONENTS AND COMPONENT SIDE TRACK SHOWN IN BLACK. SOLDER-SIDE TRACK SHOWN IN ORANGE.

## WIDEBAND AMPLIFIER BOARD (A17A2)
RTL-4156A

| Find No. | Qty. Req. | Part No. | Nomenclature | Part Value |
|---|---|---|---|---|
| C 001 | 1 | 21-80342B10 | CAPACITOR | .1UF-20-50 |
| C 002 | 1 | 23-80341B15 | CAPACITOR | 10UF-20-50 |
| C 003 | 1 | 21-80339B66 | CAPACITOR | 390PF-5-100 |
| C 004 | 1 | 23-83441B15 | CAPACITOR | 1.0UF-20-35 |
| C 005 | 1 | 21-80342B50 | CAPACITOR | 470PF-5-50 |
| C 006 | 1 | 21-80339B69 | CAPACITOR | 680PF-10-100 |
| C 007 | 1 | 23-83441B15 | CAPACITOR | 1.0UF-20-35 |
| C 008 | 1 | 23-80341B15 | CAPACITOR | 10UF-20-50 |
| C 009 | 1 | 23-80341B03 | CAPACITOR | 10UF-10-35 |
| C 010 | 1 | 21-80370A24 | CAPACITOR | 2200PF-20-50 |
| C 011 | 1 | 23-80341B35 | CAPACITOR | 10UF-20-10 |
| C 012 | 1 | 21-80370A23 | CAPACITOR | 220PF-20-50 |
| C 013 | 1 | 21-80339B66 | CAPACITOR | 390PF-5-100 |
| C 014 | 1 | 23-83441B15 | CAPACITOR | 1.0UF-20-35 |
| C 015 | 1 | 21-80342B50 | CAPACITOR | 470PF-5-50 |
| C 016 | 1 | 23-80341B15 | CAPACITOR | 10UF-20-50 |
| C 017 | 1 | 21-80339B69 | CAPACITOR | 680PF-10-100 |
| C 018 | 1 | 23-83441B15 | CAPACITOR | 1.0UF-20-35 |
| C 019 | 1 | 23-83441B15 | CAPACITOR | 1.0UF-20-35 |
| C 020 | 1 | 23-80341B15 | CAPACITOR | 10UF-20-50 |
| C 021 | 1 | 21-80339B69 | CAPACITOR | 680PF-10-100 |
| C 022 | 1 | 23-83441B15 | CAPACITOR | 1.0UF-20-35 |
| C 023 | 1 | 21-80370A24 | CAPACITOR | 2200PF-20-50 |
| C 024 | 1 | 23-83441B15 | CAPACITOR | 1.0UF-20-35 |
| C 025 | 1 | 21-80339B66 | CAPACITOR | 390PF-5-100 |
| C 026 | 1 | 23-83441B15 | CAPACITOR | 1.0UF-20-35 |
| C 027 | 1 | 21-80339B69 | CAPACITOR | 680PF-10-100 |
| C 028 | 1 | 23-83441B15 | CAPACITOR | 1.0UF-20-35 |
| C 029 | 1 | 21 83370A22 | CAPACITOR | 1000PF-20-50 |
| C 030 | 1 | 21-80342B10 | CAPACITOR | .1UF-20-50 |
| C 031 | 1 | 21-80342B10 | CAPACITOR | .1UF-20-50 |
| C 032 | 1 | 21-80370A24 | CAPACITOR | 2200PF-20-50 |
| C 033 | 1 | 23-83441B15 | CAPACITOR | 1.0UF-20-35 |
| C 034 | 1 | 21-80342B10 | CAPACITOR | .1UF-20-50 |
| C 035 | 1 | 21-80341B52 | CAPACITOR | 1300PF-5-50 |
| C 036 | 1 | 21-80342B10 | CAPACITOR | .1UF-20-50 |
| C 037 | 1 | 21-80342B10 | CAPACITOR | .1UF-20-50 |
| C 038 | 1 | 21-80342B10 | CAPACITOR | .1UF-20-50 |
| C 039 | 1 | 23-80341B15 | CAPACITOR | 10UF-20-50 |
| C 040 | 1 | 23-80341B15 | CAPACITOR | 10UF 20-50 |
| C 041 | 1 | 21-80342B10 | CAPACITOR | .1UF-20-50 |
| C 042 | 1 | 21-80342B10 | CAPACITOR | .1UF-20-50 |
| C 043 | 1 | 21-80342B10 | CAPACITOR | .1UF-20-50 |
| C 044 | 1 | 21-80342B10 | CAPACITOR | .1UF-20-50 |
| C 045 | 1 | 21-00850118 | CAPACITOR | 100PF-5-500 |
| C 046 | 1 | 23-80341B15 | CAPACITOR | 10UF-20-50 |
| C 050 | 1 | 21-80339B72 | CAPACITOR | .001UF-10-200 |
| C 052 | 1 | 21-00850118 | CAPACITOR | 100PF-5-500 |
| C 053 | 1 | 21-80341B57 | CAPACITOR | 180PF-5-50 |
| C 054 | 1 | 21-80341B57 | CAPACITOR | 180PF-5-50 |
| C 055 | 1 | 21-80372B72 | CAPACITOR | .056UF-10-50 |
| CR001 | 1 | 48-80342B19 | DIODE | |
| CR002 | 1 | 48-80342B19 | DIODE | |
| CR003 | 1 | 48-80342B19 | DIODE | |
| CR004 | 1 | 48-84463K02 | DIODE | |
| CR005 | 1 | 48-84463K02 | DIODE | |
| CR006 | 1 | 48-84463K02 | DIODE | |
| CR007 | 1 | 48-84463K02 | DIODE | |
| CR009 | 1 | 48-84463K02 | DIODE | |
| CR010 | 1 | 48-80396A27 | DIODE | |
| CR011 | 1 | 48-84463K02 | DIODE | |
| CR013 | 1 | 48-87643C01 | DIODE | |
| CR014 | 1 | 48-80396A27 | DIODE | |
| CR015 | 1 | 48-84463K02 | DIODE | |
| CR016 | 1 | 48-84463K02 | DIODE | |
| CR017 | 1 | 48-80342B19 | DIODE | |
| CR018 | 1 | 48-84453K02 | DIODE | |
| K 001 | 1 | 80-80343B61 | RELAY | |
| L 001 | 1 | 48-80372B82 | COIL, SHIELDED | 0.15UH |
| L 002 | 1 | 24-83961B01 | CHOKE | |
| L 003 | 1 | 24-83961B01 | CHOKE | |
| L 005 | 1 | 24-83961B01 | CHOKE | |
| L 006 | 1 | 24-83961B01 | CHOKE | |
| L 007 | 1 | 24-83961B01 | CHOKE | |
| L 008 | 1 | 24-83961B01 | CHOKE | |
| L 009 | 1 | 24-83961B01 | CHOKE | |
| L 010 | 1 | 24-80344B70 | COIL, SHEILDED | 1000UH |
| L 011 | 1 | 24-83961B01 | CHOKE | |
| L 012 | 1 | 24-80342B70 | COIL | |
| L 014 | 1 | 25-80342B79 | COIL,TOROID | |
| L 015 | 1 | 24-83961B01 | CHOKE | |
| L 016 | 1 | 24-80369A23 | COIL | .15UH |

## WIDEBAND AMPLIFIER BOARD (A17A2) (Cont)
RTL-4156A

| Find No. | Qty. Req. | Part No. | Nomenclature | Part Value |
|---|---|---|---|---|
| L 017 | 1 | 24-80369A23 | COIL | .15UH |
| L 019 | 1 | 48-80372B79 | COIL, SHIELDED | 0.82UH |
| L 020 | 1 | 48-80372B80 | COIL, SHIELDED | 1.50UH |
| L 021 | 1 | 48-80372B81 | COIL, SHIELDED | 0.82UH |
| L 022 | 1 | 48-80372B81 | COIL, SHIELDED | 0.12UH |
| P 001 | 1 | 09-80344B25 | RECEPTACLE | |
| P 002 | 1 | 09-80344B25 | RECEPTACLE | |
| P 003 | 1 | 09-80344B25 | RECEPTACLE | |
| P 004 | 1 | 09-80344B25 | RECEPTACLE | |
| P 005 | 1 | 09-80344B25 | RECEPTACLE | |
| P 006 | 1 | 09-80344B25 | RECEPTACLE | |
| P 007 | 1 | 09-80344B25 | RECEPTACLE | |
| P 008 | 1 | 09-80344B25 | RECEPTACLE | |
| P 009 | 1 | 09-80344B25 | RECEPTACLE | |
| P 010 | 1 | 09-80344B25 | RECEPTACLE | |
| P 011 | 1 | 09-80344B25 | RECEPTACLE | |
| P 012 | 1 | 09-80344B25 | RECEPTACLE | |
| Q 001 | 1 | 48-80340B85 | TRANSISTOR | MPS6519 |
| Q 002 | 1 | 48-80340B86 | TRANSISTOR | MPS6520 |
| Q 003 | 1 | 48-80340B86 | TRANSISTOR | MPMPS6520 |
| Q 004 | 1 | 48-80340B85 | TRANSISTOR | MPS6519 |
| Q 005 | 1 | 48-80340B85 | TRANSISTOR | MPS6519 |
| Q 006 | 1 | 48-80340B85 | TRANSISTOR | MPS6519 |
| Q 007 | 1 | 48-80340B48 | TRANSISTOR | |
| Q 008 | 1 | 48-80340B86 | TRANSISTOR | MPS6520 |
| R 001 | 1 | 06-11009C46 | RESISTOR | 750-5-1/4 |
| R 002 | 1 | 06-10621C35 | RESISTOR | 2.61K-1-1/4 |
| R 003 | 1 | 06-10621C75 | RESISTOR | 6.81K-1-1/4 |
| R 004 | 1 | 06-11009C73 | RESISTOR | 10K-5-1/4 |
| R 006 | 1 | 06-00124A49 | RESISTOR | 1K-5-1/4 |
| R 007 | 1 | 06-11009C37 | RESISTOR | 330-5-1/4 |
| R 008 | 1 | 06-11009C41 | RESISTOR | 470-5-1/4 |
| R 009 | 1 | 06-11009C17 | RESISTOR | 47-5-1/4 |
| R 010 | 1 | 06-11009C25 | RESISTOR | 100-5-1/4 |
| R 011 | 1 | 06-10621C37 | RESISTOR | 2.74K-1-1/4 |
| R 012 | 1 | 06-11009C25 | RESISTOR | 100-5-1/4 |
| R 013 | 1 | 06-11009C18 | RESISTOR | 51-5-1/4 |
| R 014 | 1 | 06-11009C23 | RESISTOR | 82-5-1/4 |
| R 015 | 1 | 06-11009C18 | RESISTOR | 51-5-1/4 |
| R 016 | 1 | 06-11009C13 | RESISTOR | 33-5-1/4 |
| R 017 | 1 | 06-10621C23 | RESISTOR | 1.96K-1-1/4 |
| R 018 | 1 | 06-10621C67 | RESISTOR | 5.62K-1-1/4 |
| R 019 | 1 | 06-00124A71 | RESISTOR | 8.2K-5-1/4 |
| R 020 | 1 | 06-11009C53 | RESISTOR | 1.5K-5-1/4 |
| R 021 | 1 | 06-11041C49 | RESISTOR | 220-5-1/8 |
| R 022 | 1 | 06-80340B14 | RESISTOR | 12-5-.1 |
| R 023 | 1 | 06-80340B14 | RESISTOR | 12-5-.1 |
| R 024 | 1 | 06-11009C55 | RESISTOR | 1.8K-5-1/4 |
| R 025 | 1 | 06-11009C87 | RESISTOR | 39K-5-1/4 |
| R 026 | 1 | 06-11009C73 | RESISTOR | 10K-5-1/4 |
| R 027 | 1 | 06-11009C55 | RESISTOR | 1.8K-5-1/4 |
| R 028 | 1 | 06-11009C55 | RESISTOR | 1.8K-5-1/4 |
| R 029 | 1 | 06-10621C85 | RESISTOR | 8.66K-1-1/4 |
| R 030 | 1 | 06-10621B78 | RESISTOR | 681-1-1/4 |
| R 031 | 1 | 06-11009C85 | RESISTOR | 33K-5-1/4 |
| R 032 | 1 | 06-11041C41 | RESISTOR | 100-5-1/8 |
| R 033 | 1 | 06-11041C65 | RESISTOR | 1K-5-1/8 |
| R 034 | 1 | 18-83452F12 | RESISTOR,VARIABLE | 5K |
| R 035 | 1 | 06-00124A61 | RESISTOR | 3.3K-5-1/4 |
| R 036 | 1 | 06-11009C89 | RESISTOR | 47K-5-1/4 |
| R 037 | 1 | 06-11009C71 | RESISTOR | 8.2K-5-1/4 |
| R 038 | 1 | 18-83452F10 | RESISTOR,VARIABLE | 1K |
| R 039 | 1 | 06-11009C85 | RESISTOR | 33K-5-1/4 |
| R 040 | 1 | 06-11009C45 | RESISTOR | 680-5-1/4 |
| R 041 | 1 | 06-11009C66 | RESISTOR | 5.1K-5-1/4 |
| R 042 | 1 | 06-11009C89 | RESISTOR | 47K-5-1/4 |
| R 043 | 1 | 06-11009C65 | RESISTOR | 4.7K-5-1/4 |
| R 044 | 1 | 06-11009C48 | RESISTOR | 910-5-1/4 |
| R 045 | 1 | 06-11009C42 | RESISTOR | 510-5-1/4 |
| R 046 | 1 | 06-10621D42 | RESISTOR | 33.2-1-1/4 |
| R 047 | 1 | 06-11009D15 | RESISTOR | 510K-5-1/4 |
| R 048 | 1 | 06-11009C78 | RESISTOR | 16K-5-1/4 |
| R 049 | 1 | 06-11009C61 | RESISTOR | 3.3K-5-1/4 |
| R 051 | 1 | 06-11009D06 | RESISTOR | 220K-5-1/4 |
| R 052 | 1 | 06-11009D06 | RESISTOR | 220K-5-1/4 |
| R 053 | 1 | 06-11009C82 | RESISTOR | 24K-5-1/4 |
| R 054 | 1 | 06-11009C90 | RESISTOR | 51K-5-1/4 |
| R 056 | 1 | 06-11009C97 | RESISTOR | 100K-5-1/4 |
| R 057 | 1 | 06-11009C97 | RESISTOR | 100K-5-1/4 |
| R 058 | 1 | 06-11009B05 | RESISTOR | 200K-5-1/4 |
| R 059 | 1 | 06-11009C71 | RESISTOR | 8.2K-5-1/4 |
| R 060 | 1 | 06-11041C41 | RESISTOR | 100-5-1/8 |
| R 061 | 1 | 06-11041C37 | RESISTOR | 68-5-1/8 |
| R 062 | 1 | 06-11041C41 | RESISTOR | 100-5-1/8 |
| R 063 | 1 | 06-00185A45 | RESISTOR | 680-5-1/8 |
| R 064 | 1 | 06-11041A23 | RESISTOR | 18-5-1/8 |
| R 065 | 1 | 06-11041C52 | RESISTOR | 300-5-1/8 |
| R 066 | 1 | 06-11041C52 | RESISTOR | 300-5-1/8 |
| R 067 | 1 | 06-11009C67 | RESISTOR | 5.6K-5-1/4 |
| R 068 | 1 | 06-11009C18 | RESISTOR | 51-5-1/4 |
| R 069 | 1 | 06-11009C73 | RESISTOR | 10K-5-1/4 |
| R 070 | 1 | 06-00185A37 | RESISTOR | 330-5-1/8 |
| R 071 | 1 | 06-00124A41 | RESISTOR | 470-5-1/4 |
| R 072 | 1 | 06-00124A49 | RESISTOR | 1K-5-1/4 |
| U 001 | 1 | 51-05292H02 | INTEGRATED CIRCUIT | |
| U 002 | 1 | 51-80345A01 | INTEGRATED CIRCUIT | CA3140E SCREENED |
| U 004 | 1 | 51-80343B29 | INTEGRATED CIRCUIT | SM83-2653 |
| U 005 | 1 | 51-80343B28 | INTEGRATED CIRCUIT | SM83-2654 |
| U 006 | 1 | 51-83629M71 | INTEGRATED CIRCUIT | |
| U 007 | 1 | 51-80345A02 | INTEGRATED CIRCUIT | CA3160E SCREENED |
| U 008 | 1 | 51-80345A04 | INTEGRATED CIRCUIT | CA3240E SCREENED |
| U 009 | 1 | 51-80345A05 | INTEGRATED CIRCUIT | HI-201-5 SCREENED |
| U 010 | 1 | 51-80346A05 | MIXER | |
| VR002 | 1 | 48-83461E03 | DIODE,ZENER | 3.3V-5-.5 |
| VR003 | 1 | 48-83461E03 | DIODE,ZENER | 3.3V-5-.5 |
| W 001 | 1 | 30-80344B16 | CABLE ASSEMBLY | 30-P22372E001 |

## RF INPUT MODULE

### DUPLEX GENERATOR BOARD (A17A3)

(RTL-4157A)

*Figure 17-10. Block Diagram*

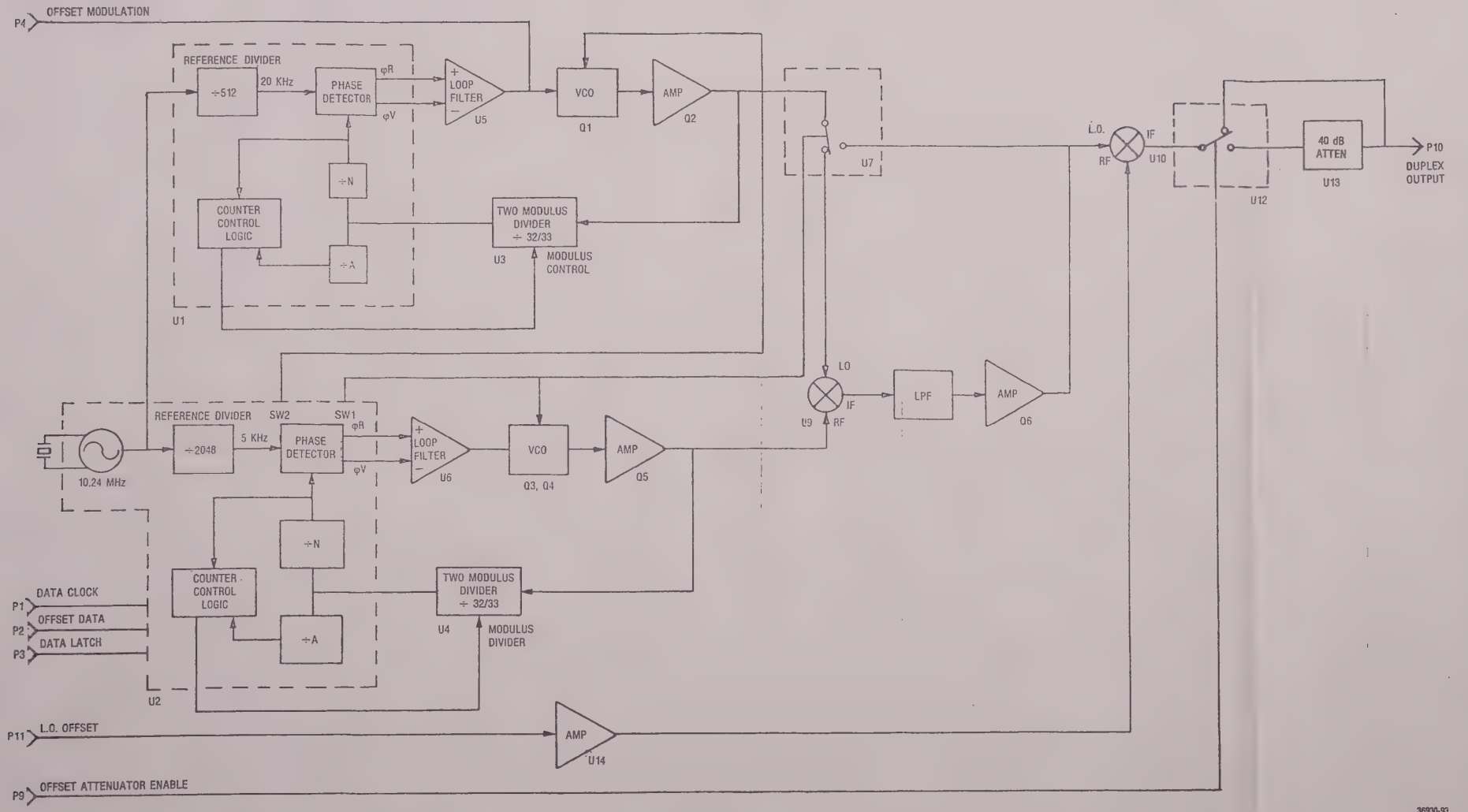

*Figure 17-11. Schematic*

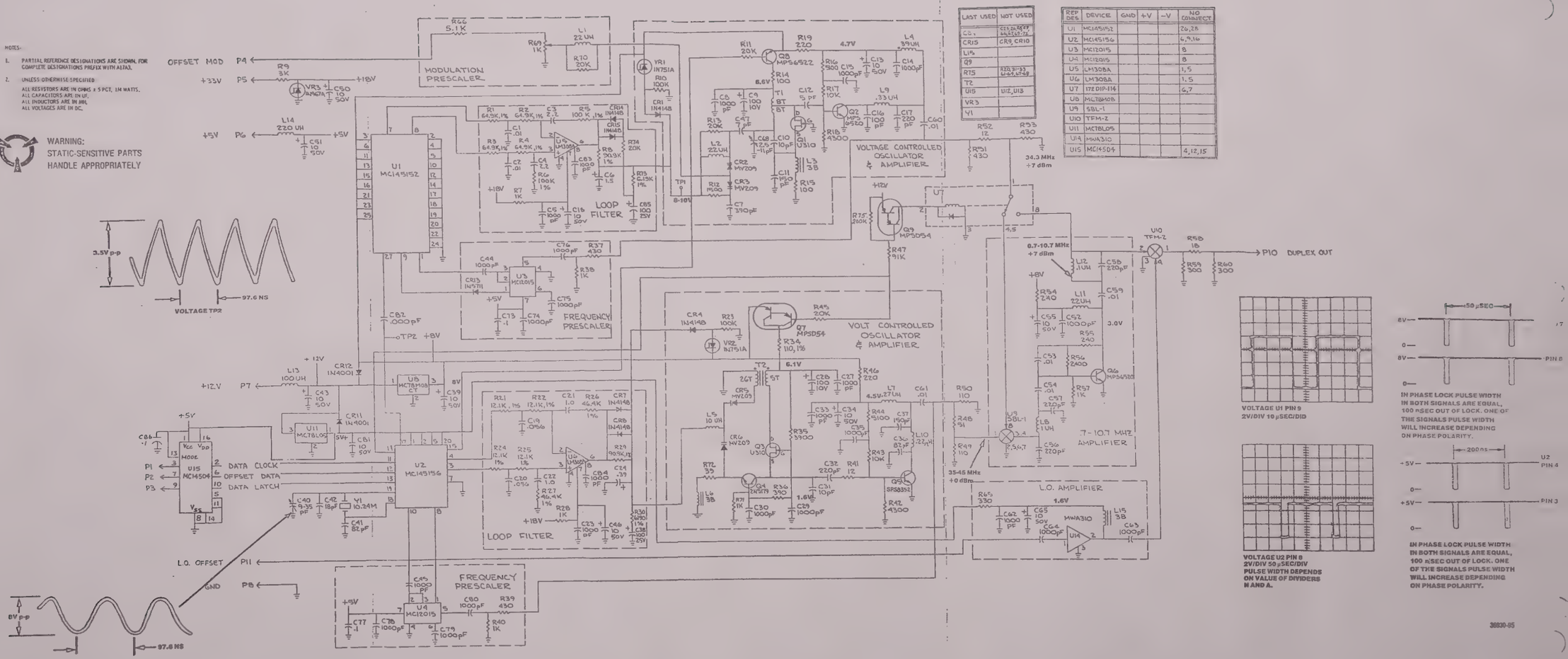




VOLTAGE U1 PIN 9
2V/DIV 10 μSEC/DIV



VOLTAGE U2 PIN 8
2V/DIV 50 μSEC/DIV
PULSE WIDTH DEPENDS ON VALUE OF DIVIDERS N AND A.




IN PHASE LOCK PULSE WIDTH IN BOTH SIGNALS ARE EQUAL, 100 nSEC OUT OF LOCK. ONE OF THE SIGNALS PULSE WIDTH WILL INCREASE DEPENDING ON PHASE POLARITY.




IN PHASE LOCK PULSE WIDTH IN BOTH SIGNALS ARE EQUAL, 100 nSEC OUT OF LOCK. ONE OF THE SIGNALS PULSE WIDTH WILL INCREASE DEPENDING ON PHASE POLARITY.

36930-95



17-20

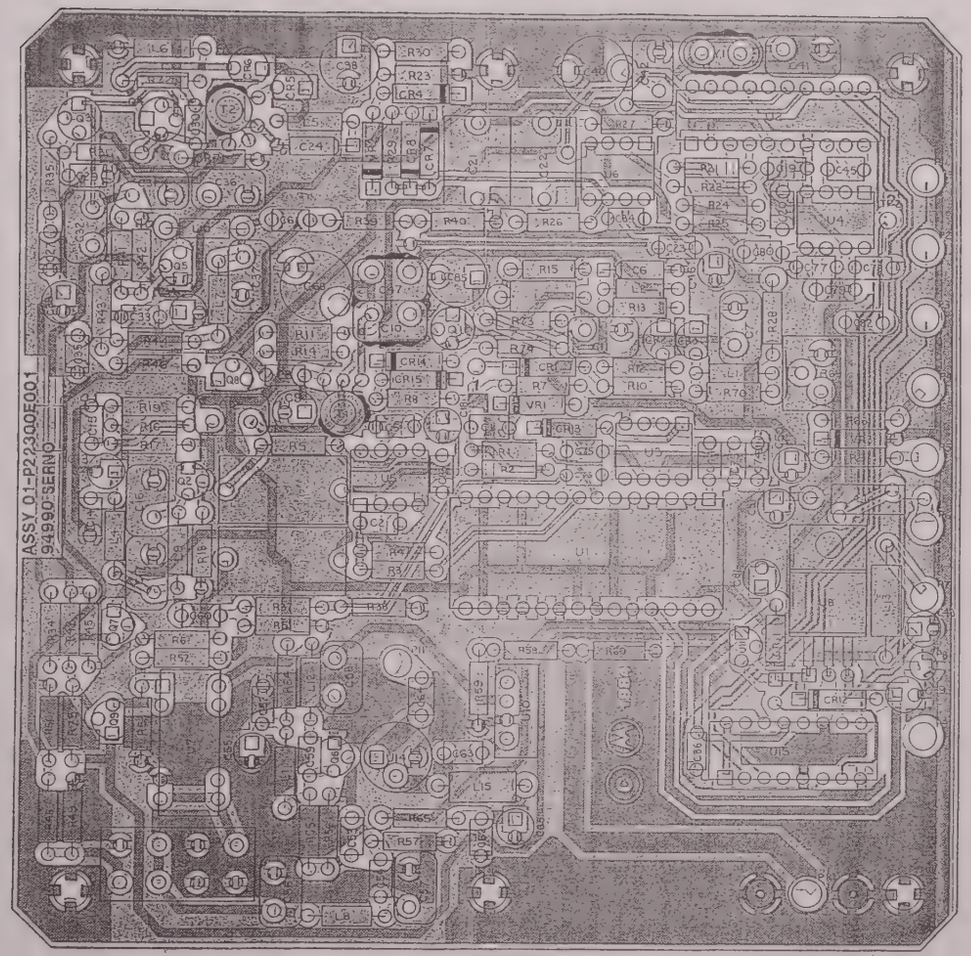


COMPONENTS AND COMPONENT SIDE TRACK SHOWN IN BLACK. SOLDER-SIDE TRACK SHOWN IN ORANGE.

DUPLEX GENERATOR BOARD (A17A3)
RTL-4157A

| Find No. | Qty. Req. | Part No. | Nomenclature | Part Value |
|---|---|---|---|---|
| C 001 | 1 | 21-80341B94 | CAPACITOR | .01UF-10-100 |
| C 002 | 1 | 21-80341B94 | CAPACITOR | .01UF-10-100 |
| C 003 | 1 | 08-80343B16 | CAPACITOR | 2.2UF-5-100 |
| C 004 | 1 | 08-80343B16 | CAPACITOR | 2.2UF-5-100 |
| C 005 | 1 | 21-80341B93 | CAPACITOR | 1000PF-20-100 |
| C 006 | 1 | 23-80344B36 | CAPACITOR | 1.5UF-10-35 |
| C 007 | 1 | 21-80339B21 | CAPACITOR | 390PF-5-100 |
| C 008 | 1 | 21-80341B93 | CAPACITOR | 1000PF-20-100 |
| C 009 | 1 | 23-80341B07 | CAPACITOR | 100UF-20-10 |
| C 010 | 1 | 21-08840B11 | CAPACITOR | 10PF-N470 |
| C 011 | 1 | 21-80369A94 | CAPACITOR | 150PF-5-500 |
| C 012 | 1 | 21-80369A85 | CAPACITOR | 5PF-.5PF-500 |
| C 013 | 1 | 23-80341B15 | CAPACITOR | 10UF-20-50 |
| C 014 | 1 | 21-80341B93 | CAPACITOR | 1000PF-20-100 |
| C 015 | 1 | 21-80341B93 | CAPACITOR | 1000PF-20-100 |
| C 016 | 1 | 21-00850118 | CAPACITOR | 100PF-5-500 |
| C 017 | 1 | 21-80339B26 | CAPACITOR | 220PF-5-500 |
| C 018 | 1 | 23-80341B15 | CAPACITOR | 10UF-20-50 |
| C 019 | 1 | 21-80342B07 | CAPACITOR | .056UF-10-100 |
| C 020 | 1 | 21-80342B07 | CAPACITOR | .056UF-10-100 |
| C 021 | 1 | 08-80343B13 | CAPACITOR | 1.0UF-10-100 |
| C 022 | 1 | 08-80343B13 | CAPACITOR | 1.0UF-10-100 |
| C 023 | 1 | 21-80341B93 | CAPACITOR | 1000PF-20-100 |
| C 024 | 1 | 23-80340B99 | CAPACITOR | .33UF-10-35 |
| C 027 | 1 | 21-80341B93 | CAPACITOR | 1000PF-20-100 |
| C 028 | 1 | 23-80341B07 | CAPACITOR | 100UF-20-10 |
| C 029 | 1 | 21-80341B93 | CAPACITOR | 1000PF-20-100 |
| C 030 | 1 | 21-80341B93 | CAPACITOR | 1000PF-20-100 |
| C 031 | 1 | 21-00859334 | CAPACITOR | 10PF-.5PF-500 |
| C 032 | 1 | 21-80339B26 | CAPACITOR | 220PF-5-500 |
| C 033 | 1 | 21-80341B93 | CAPACITOR | 1000PF-20-100 |
| C 034 | 1 | 23-80341B15 | CAPACITOR | 10UF-20-50 |
| C 035 | 1 | 21-80341B93 | CAPACITOR | 1000PF-20-100 |
| C 036 | 1 | 21-80339B18 | CAPACITOR | 82PF-5-500 |
| C 037 | 1 | 21-80369A94 | CAPACITOR | 150PF-5-500 |
| C 038 | 1 | 23-84665F03 | CAPACITOR | 100UF-20-25 |
| C 039 | 1 | 23-80341B15 | CAPACITOR | 10UF-20-50 |
| C 040 | 1 | 20-80396A57 | CAPACITOR | 9 TO 35PF-200 |
| C 041 | 1 | 21-80339B18 | CAPACITOR | 82PF-5-500 |
| C 042 | 1 | 21-80339B13 | CAPACITOR | 18PF-5-500 |
| C 043 | 1 | 23-80341B15 | CAPACITOR | 10UF-20-50 |
| C 044 | 1 | 21-80341B93 | CAPACITOR | 1000PF-20-100 |
| C 045 | 1 | 21-80341B93 | CAPACITOR | 1000PF-20-100 |
| C 046 | 1 | 23-80341B15 | CAPACITOR | 10UF-20-50 |
| C 047 | 1 | 21-80339B11 | CAPACITOR | 7PF-.5PF-500 |
| C 050 | 1 | 23-80341B15 | CAPACITOR | 10UF-20-50 |
| C 051 | 1 | 23-80341B15 | CAPACITOR | 10UF-20-50 |
| C 052 | 1 | 21-80341B93 | CAPACITOR | 1000PF-20-100 |
| C 053 | 1 | 21-80342B09 | CAPACITOR | .01UF-20-50 |
| C 054 | 1 | 21-80342B09 | CAPACITOR | .01UF-20-50 |
| C 055 | 1 | 23-80341B15 | CAPACITOR | 10UF-20-50 |
| C 056 | 1 | 21-80339B26 | CAPACITOR | 220PF-5-500 |
| C 057 | 1 | 21-80339B26 | CAPACITOR | 220PF-5-500 |
| C 058 | 1 | 21-80339B26 | CAPACITOR | 220PF-5-500 |
| C 059 | 1 | 21-80342B09 | CAPACITOR | .01UF-20-50 |
| C 060 | 1 | 21-80342B09 | CAPACITOR | .01UF-20-50 |
| C 061 | 1 | 21-80342B09 | CAPACITOR | .01UF-20-50 |
| C 062 | 1 | 21-80341B93 | CAPACITOR | 1000PF-20-100 |
| C 063 | 1 | 21-80341B93 | CAPACITOR | 1000PF-20-100 |
| C 064 | 1 | 21-80341B93 | CAPACITOR | 1000PF-20-100 |
| C 065 | 1 | 23-80341B15 | CAPACITOR | 10UF-20-50 |
| C 066 | 1 | 23-80341B15 | CAPACITOR | 10UF-20-50 |
| C 067 | 1 | 21-80339B72 | CAPACITOR | .001UF-10-200 |
| C 068 | 1 | 20-80343B36 | CAPACITOR, VARIABLE | 2.5 TO 11PF |
| C 073 | 1 | 21-80342B10 | CAPACITOR | .1UF-20-50 |
| C 074 | 1 | 21-80341B93 | CAPACITOR | 1000PF-20-100 |
| C 075 | 1 | 21-80341B93 | CAPACITOR | 1000PF-20-100 |
| C 076 | 1 | 21-80341B93 | CAPACITOR | 1000PF-20-100 |
| C 077 | 1 | 21-80342B10 | CAPACITOR | .1UF-20-50 |
| C 078 | 1 | 21-80341B93 | CAPACITOR | 1000PF-20-100 |
| C 079 | 1 | 21-80341B93 | CAPACITOR | 1000PF-20-100 |
| C 080 | 1 | 21-80341B93 | CAPACITOR | 1000PF-20-100 |
| C 081 | 1 | 23-80341B15 | CAPACITOR | 10UF-20-50 |
| C 082 | 1 | 21-80341B93 | CAPACITOR | 1000PF-20-100 |
| C 083 | 1 | 21-80341B93 | CAPACITOR | 1000PF-20-100 |
| C 084 | 1 | 21-80341B93 | CAPACITOR | 1000PF-20-100 |
| C 085 | 1 | 23-84665F03 | CAPACITOR | 100UF-20-25 |
| C 086 | 1 | 21-80342B10 | CAPACITOR | .1UF-20-50 |
| CR001 | 1 | 48-84463K02 | DIODE | |
| CR002 | 1 | 48-80340B60 | VARACTOR | |
| CR003 | 1 | 48-80340B60 | VARACTOR | |
| CR004 | 1 | 48-84463K02 | DIODE | |
| CR005 | 1 | 48-80340B60 | VARACTOR | |



*Figure 17-12. Printed Wiring Board Assembly and Parts List*

## DUPLEX GENERATOR BOARD (A17A3) (Cont)
RTL-4157A

| Find No. | Qty. Req. | Part No. | Nomenclature | Part Value |
|---|---|---|---|---|
| CR006 | 1 | 48-80340B60 | VARACTOR | |
| CR007 | 1 | 48-84463K02 | DIODE | |
| CR008 | 1 | 48-84463K02 | DIODE | |
| CR009 | 1 | 48-80339B87 | DIODE | |
| CR010 | 1 | 48-84463K02 | DIODE | |
| CR011 | 1 | 48-82466H13 | DIODE | |
| CR012 | 1 | 48-82466H13 | DIODE | |
| CR013 | 1 | 48-87643C01 | DIODE | |
| CR014 | 1 | 48-84463K02 | DIODE | |
| CR015 | 1 | 48-84463K02 | DIODE | |
| L 001 | 1 | 24-80369A31 | COIL | 22UH |
| L 002 | 1 | 24-80369A31 | COIL | 22UH |
| L 003 | 1 | 24-83961B01 | CHOKE | |
| L 004 | 1 | 24-80340B52 | COIL | .39UH |
| L 005 | 1 | 24-80369A29 | COIL | 10UH |
| L 006 | 1 | 24-83961B01 | CHOKE | |
| L 007 | 1 | 24-80340B51 | COIL | .27UH |
| L 008 | 1 | 24-80369A22 | COIL | 1UH |
| L 009 | 1 | 24-80369A26 | COIL | .33UH |
| L 010 | 1 | 24-80369A25 | COIL | .22UH |
| L 011 | 1 | 24-80369A31 | COIL | 22UH |
| L 012 | 1 | 24-80369A19 | COIL | .1UH |
| L 013 | 1 | 24-80369A37 | COIL | 100UH |
| L 014 | 1 | 24-80369A38 | COIL | 220UH |
| L 015 | 1 | 24-83961B01 | CHOKE | |
| P 001 | 1 | 09-80344B25 | RECEPTACLE | |
| P 002 | 1 | 09-80344B25 | RECEPTACLE | |
| P 003 | 1 | 09-80344B25 | RECEPTACLE | |
| P 004 | 1 | 09-80344B25 | RECEPTACLE | |
| P 005 | 1 | 09-80344B25 | RECEPTACLE | |
| P 006 | 1 | 09-80344B25 | RECEPTACLE | |
| P 007 | 1 | 09-80344B25 | RECEPTACLE | |
| P 008 | 1 | 09-80344B25 | RECEPTACLE | |
| P 009 | 1 | 09-80344B25 | RECEPTACLE | |
| P 010 | 1 | 09-80344B25 | RECEPTACLE | |
| P 011 | 1 | 09-80344B25 | RECEPTACLE | |
| Q 001 | 1 | 48-00869933 | TRANSISTOR | J-FET |
| Q 002 | 1 | 48-80340B86 | TRANSISTOR | MPS6520 |
| Q 003 | 1 | 48-00869933 | TRANSISTOR | J-FET |
| Q 004 | 1 | 48-00869776 | TRANSISTOR | |
| Q 005 | 1 | 48-80340B86 | TRANSISTOR | MPS6520 |
| Q 006 | 1 | 48-80340B86 | TRANSISTOR | MPS6520 |
| Q 007 | 1 | 48-80372B78 | TRANSISTOR | |
| Q 008 | 1 | 48-80340B47 | TRANSISTOR | |
| Q 009 | 1 | 48-00869849 | TRANSISTOR | |
| Q 010 | 1 | 48-80340B45 | TRANSISTOR | |
| Q 011 | 1 | 48-80340B86 | TRANSISTOR | MPS6520 |
| R 001 | 1 | 06-10621D70 | RESISTOR | 64.9K-1-1/4 |
| R 002 | 1 | 06-10621D70 | RESISTOR | 64.9K-1-1/4 |
| R 003 | 1 | 06-10621D70 | RESISTOR | 64.9K-1-1/4 |
| R 004 | 1 | 06-10621D70 | RESISTOR | 64.9K-1-1/4 |
| R 005 | 1 | 06-10621D88 | RESISTOR | 100K-1-1/4 |
| R 006 | 1 | 06-10621D88 | RESISTOR | 100K-1-1/4 |
| R 007 | 1 | 06-11009C49 | RESISTOR | 1K-5-1/4 |
| R 008 | 1 | 06-10621D84 | RESISTOR | 90.9K-1-1/4 |
| R 009 | 1 | 06-11009C60 | RESISTOR | 3K-5-1/4 |
| R 010 | 1 | 06-11009C97 | RESISTOR | 100K-5-1/4 |
| R 011 | 1 | 06-11009C80 | RESISTOR | 20K-5-1/4 |
| R 012 | 1 | 06-11009C53 | RESISTOR | 1.5K-5-1/4 |
| R 013 | 1 | 06-11009C80 | RESISTOR | 20K-5-1/4 |
| R 014 | 1 | 06-11009C25 | RESISTOR | 100-5-1/4 |
| R 015 | 1 | 06-11009C25 | RESISTOR | 100-5-1/4 |
| R 016 | 1 | 06-11009C66 | RESISTOR | 5.1K-5-1/4 |
| R 017 | 1 | 06-11009C73 | RESISTOR | 10K-5-1/4 |
| R 018 | 1 | 06-11009C64 | RESISTOR | 4.3K-5-1/4 |
| R 019 | 1 | 06-11009C33 | RESISTOR | 220-5-1/4 |
| R 021 | 1 | 06-10621C99 | RESISTOR | 12.1K-1-1/4 |
| R 022 | 1 | 06-10621C99 | RESISTOR | 12.1K-1-1/4 |
| R 023 | 1 | 06-11009C97 | RESISTOR | 100K-5-1/4 |
| R 024 | 1 | 06-10621C99 | RESISTOR | 12.1K-1-1/4 |
| R 025 | 1 | 06-10621C99 | RESISTOR | 12.1K-1-1/4 |
| R 026 | 1 | 06-10621D56 | RESISTOR | 46.4K-1-1/4 |
| R 027 | 1 | 06-10621D56 | RESISTOR | 46.4K-1-1/4 |
| R 028 | 1 | 06-11009C49 | RESISTOR | 1K-5-1/4 |
| R 029 | 1 | 06-10621D84 | RESISTOR | 90.9K-1-1/4 |
| R 030 | 1 | 06-10621C71 | RESISTOR | 6.19K-1-1/4 |
| R 034 | 1 | 06-00124A98 | RESISTOR | 110K-1-1/4 |
| R 035 | 1 | 06-11009C63 | RESISTOR | 3.9K-5-1/4 |
| R 036 | 1 | 06-11009C39 | RESISTORS | 390-5-1/4 |
| R 037 | 1 | 06-11009C40 | RESISTOR | 430-5-1/4 |
| R 038 | 1 | 06-11009C49 | RESISTOR | 1K-5-1/4 |
| R 039 | 1 | 06-11009C40 | RESISTOR | 430-5-1/4 |
| R 040 | 1 | 06-11009C49 | RESISTOR | 1K-5-1/4 |
| R 041 | 1 | 06-11009C03 | RESISTOR | 12-5-1/4 |
| R 042 | 1 | 06-11009C64 | RESISTOR | 4.3K-5-1/4 |
| R 043 | 1 | 06-11009C73 | RESISTOR | 10K-5-1/4 |
| R 044 | 1 | 06-11009C66 | RESISTOR | 5.1K-5-1/4 |
| R 045 | 1 | 06-11009C80 | RESISTOR | 20K-5-1/4 |
| R 046 | 1 | 06-11009C33 | RESISTOR | 220-5-1/4 |
| R 047 | 1 | 06-11009C96 | RESISTOR | 91K-5-1/4 |
| R 048 | 1 | 06-11009C18 | RESISTOR | 51-5-1/4 |
| R 049 | 1 | 06-11009C26 | RESISTOR | 110-5-1/4 |
| R 050 | 1 | 06-11009C26 | RESISTOR | 110-5-1/4 |
| R 051 | 1 | 06-11009C40 | RESISTOR | 430-5-1/4 |
| R 052 | 1 | 06-11009C03 | RESISTOR | 12-5-1/4 |
| R 053 | 1 | 06-11009C40 | RESISTOR | 430-5-1/4 |
| R 054 | 1 | 06-11009C34 | RESISTOR | 240-5-1/4 |
| R 055 | 1 | 06-11009C34 | RESISTOR | 240-5-1/4 |
| R 056 | 1 | 06-11009C58 | RESISTOR | 2.4K-5-1/4 |
| R 057 | 1 | 06-11009C49 | RESISTOR | 1K-5-1/4 |
| R 058 | 1 | 06-11009C07 | RESISTOR | 18-5-1/4 |
| R 059 | 1 | 06-11009C36 | RESISTOR | 300-5-1/4 |
| R 060 | 1 | 06-11009C36 | RESISTOR | 300-5-1/4 |
| R 061 | 1 | 06-11009C91 | RESISTOR | 56K-5-1/4 |
| R 062 | 1 | 06-11009C95 | RESISTOR | 82K-5-1/4 |
| R 063 | 1 | 06-00124A11 | RESISTOR | 2K-5-1/4 |
| R 064 | 1 | 06-11009C56 | RESISTOR | 2K-5-1/4 |
| R 065 | 1 | 06-11009C37 | RESISTOR | 330-5-1/4 |
| R 066 | 1 | 06-11009C66 | RESISTOR | 5.1K-5-1/4 |
| R 069 | 1 | 18-83452F10 | RESISTOR, VARIABLE | 1K |
| R 070 | 1 | 06-11009C80 | RESISTOR | 20K-5-1/4 |
| R 071 | 1 | 06-11009C49 | RESISTOR | 1K-5-1/4 |
| R 072 | 1 | 06-11009C15 | RESISTOR | 39-5-1/4 |
| R 073 | 1 | 06-10621C71 | RESISTOR | 6.19K-1-1/4 |
| R 074 | 1 | 06-11009C80 | RESISTOR | 20K-5-1/4 |
| R 075 | 1 | 06-00124B05 | RESISTOR | 200K-5-1/4 |
| T 001 | 1 | 25-80342B74 | TRANSFORMER | |
| T 002 | 1 | 25-80342B82 | TRANSFORMER | |
| U 001 | 1 | 51-80340B19 | INTEGRATED CIRCUIT | |
| U 002 | 1 | 51-83625M62 | INTEGRATED CIRCUIT | |
| U 003 | 1 | 51-80340B16 | INTEGRATED CIRCUIT | |
| U 004 | 1 | 51-80340B15 | INTEGRATED CIRCUIT | |
| U 005 | 1 | 51-80365A27 | INTEGRATED CIRCUIT | |
| U 006 | 1 | 51-80365A27 | INTEGRATED CIRCUIT | |
| U 007 | 1 | 80-80341B25 | RELAY | |
| U 008 | 1 | 51-05292H02 | INTEGRATED CIRCUIT | |
| U 009 | 1 | 01-80340B75 | MIXER | |
| U 010 | 1 | 51-80346A05 | MIXER | DOUBLE BALANCED |
| U 011 | 1 | 51-05469E01 | INTEGRATED CIRCUIT | |
| U 012 | 1 | 80-80339B85 | RELAY | |
| U 013 | 1 | 01-80339B01 | ATTNEUATOR | 40DB |
| U 014 | 1 | 51-80340B63 | INTEGRATED CIRCUIT | |
| U 015 | 1 | 51-80372B85 | BUFFER | |
| VR001 | 1 | 48-82256C51 | DIODE, ZENER | 5.1V-5-.5 |
| VR002 | 1 | 48-82256C51 | DIODE, ZENER | 5.1V-5-.5 |
| VR003 | 1 | 48-83461E18 | DIODE, ZENER | 18V-10-.5 |
| Y 001 | 1 | 48-80343B32 | CRYSTAL | 10.24 MHZ |

# SECTION 18.
# FRONT PANEL ASSEMBLY (A18)

## 18.1 DESCRIPTION

The Front Panel assembly (A18) contains controls, switches, and LEDs which control the System Analyzer. It also contains miscellaneous input and output ports. Most of the control devices are mounted directly to the Front Panel; however, some of them are mounted on the Display board (A18A1). Front Panel circuitry is connected to the rest of the system by two flexible printed wiring boards — the Front Panel Left Flex, which connects the Display board to the System Motherboard (A19), and the Right Flex, which connects the Scope controls to the Motherboard (A19). A ribbon cable assembly also connects the Display board to the Front-Panel Interface board (A15).

A schematic of the Front Panel assembly is shown at the end of this section in Figure 18-1. This is followed by Figure 18-2a-f, which coordinates the Front Panel parts list with three views of the Front Panel, with the printed wiring board assemblies of the Left and Right Flexes, and with the Switch Interconnect board.

A schematic of the Display board follows these figures in Figure 18-3, with the printed wiring board assembly and parts list in Figure 18-4.

## 18.2 CONTROLS, SWITCHES AND LEDs

Table 18-1 describes each control device on the Front Panel, including those on the Display board (A18A1). (See Figure 18-2a at the end of the section for exact positions of these controls.)

The step-attenuator control knob (Step), the Antenna port, the RF In/Out port, the Duplex Generator Output port, and the Duplex Generator On/Off switch are part of the RF Input module (A17). For information on these ports and switches, refer to Section 17 on the A17 module.

Table 18-1. Controls, Switches and LEDs on the Front Panel

| Control, Switch, or LED | Function |
|---|---|
| **Main Switches** | |
| POWER (S3) | In the On position, the system is powered up. In the Standby and DC Off positions during ac operation, and in the Standby position during dc operation, all modules are powered down except the Frequency-Standard Interface board (A16). In the DC Off position during dc operation, all modules are powered down. |
| FUNCTION (S2) | Determines whether the system is in Generate or Monitor mode. |
| MODULATION (S1) | Determines whether the modulation generator output is continuously on (Cont), Off, or Burst. |
| **RF SECTION Controls** | |
| RF Level (R12 and R26) | Regulates the RF output power by controlling the reference voltage applied to the ALC loop on the Wideband Amplifier board (A17A2). |
| RF Port Sel | Controls which port (Antenna or RF In/Out) is enabled.<br>Pulled out enables Antenna port.<br>Pushed in enables RF In/Out port. |
| Ports: Antenna, RF In/Out, and Ext Wattmeter | See Section 17 on the RF Input module (A17). |
| **OSCILLOSCOPE Controls** | |
| Vert (S12 and R11) | |
| S12 | Selects from 4 values of vertical-input sensitivity: 0.01V, 0.1V, 1V, and 10V/Div. When one of the 0.01V to 10V/Div RNG SEL outputs is low, the corresponding vertical-input sensitivity has been selected. These outputs are interfaced to the Processor board by circuitry on the Front-Panel Interface board. |
| R11 | Provides a continuously variable but uncalibrated vertical-input sensitivity. When turned fully clockwise, calibrates the vertical-input sensitivity. |

Table 18-1. Controls, Switches and LEDs on the Front Panel (Cont)

| Control, Switch, or LED | Function |
|---|---|
| **OSCILLOSCOPE Controls** | |
| Trig Level/Position (S11 and R10) | |
| S11 | Selects automatic or normal triggering. In automatic mode, the AUTO/NOR TRIG SEL output, which goes to the Scope Amplifier board (A2), is −5V. In this mode, the scope sweep free-runs when there is no triggering. In normal mode, the AUTO/NOR TRIG SEL output is pulled to +5V by a pull-up resistor on A2, and the scope sweep is blanked in the absence of triggering. |
| R10 | Adjusts the reference (Trig Level) to which the input signal is compared for scope triggering. The triggering circuit is on the Scope/DVM Control board (A7). |
| Horiz (S10, R9, R8) | |
| S10 | Selects one of six horizontal-sweep speeds or external horizontal input. When one of the SWP SEL or EXT HORIZ SEL outputs is high, the corresponding horizontal mode has been selected. These outputs are interfaced to processor control by circuitry on the Front-Panel Interface board. |
| R9 | Provides a continuously variable dc voltage at the SWP VERNIER VOLT output, which goes to the Scope Amplifier board, and thus provides a continuously variable horizontal-sweep speed. When R9 is fully clockwise, the horizontal-sweep speed is calibrated. |
| R8 | In external horizontal mode, adjusts the horizontal-input sensitivity over a range of 0.1V/Div to 10V/Div. |
| Vert (R14) and Horiz (R15) | |
| R14 | Adjusts the scope's vertical position by adjusting the offset in the vertical pre-amplifier on the Front-Panel Interface board. |
| R15 | Adjusts the scope's horizontal position by adjusting the offset in the horizontal amplifier on the Scope Amplifier board. |
| Port: Vert/Sinad/Dist/DVM/Counter In – Multipurpose Input | Most of the basic measurement functions of the System Analyzer can be performed on signals connected to this port. The particular measurement being performed is indicated by the display LEDs. |
| Port: Ext Horiz (External Horizontal Input) | Controls the scope's horizontal sweep in external-horizontal mode. R8 controls input sensitivity of 0.1V/Div to 10V/Div. |
| **MONITOR Controls** | |
| Squelch (R7) | Controls the dc voltage at the SQUELCH LEVEL output (which goes to the Receiver), and thus controls the RF level below which the Receiver is squelched. |
| Volume (R6) | Controls the volume of the speaker output. |
| Image/Dplx (S17) – Image/Duplex Switch | Selects high-side or low-side mixing during normal monitor operation, and selects high-side or low-side offset during Duplex operation. During high-side mix or high-side offset, S17 is open and the IMAGE HI/LO signal is pulled up to +5V by a resistor on the Front-Panel Interface board. During low-side mix or low-side offset, S17 is closed and the IMAGE HI/LO signal is pulled low. The IMAGE HI/LO output is interfaced to processor control by circuitry on the Front-Panel Interface board. |
| BW (S16) – Bandwidth Switch | Controls the generator's FM sensitivity, the Receiver's demodulation sensitivity, and audio filters in the Receiver. In wideband mode, S16 is open, and the WB/NB output is pulled up to +5V by a resistor on the Front-Panel Interface board. In narrowband mode, S16 is closed, and the WB/NB output is pulled low. The WB/NB output is interfaced to processor control by circuitry on the Front-Panel Interface board. |
| BFO (R18) | Controls the dc voltage at the BFO FREQ CNTL output, and thus controls the frequency of the varactor-tuned BFO on the Receiver board. |
| Port: Demod Out | In monitor mode, the Receiver's demodulation output comes out of this port. In FM, the output level is 1 volt-peak per kHz of peak deviation in narrowband, and 1 volt-peak per 10 kHz of peak deviation in wideband. In AM, the output level is a nominal 1 volt-peak per 10 percent AM. |

Table 18-1. Controls, Switches and LEDs on the Front Panel (Cont)

| Control, Switch, or LED | Function |
|---|---|
| **MODULATION Controls** | |
| Code Synth Lvl (R5), Ext Level (R4), 1 KHz Level (R13) | Adjust the amplitude of the signals that modulate the RF signal generator. |
| Switch S15 | Turns the 1 KHz signal on and off. |
| Port: Mod Out | Connects to the modulation generator's output. In generate mode, this port is the modulation source for the signal generator. |
| Port: Ext Mod In | Allows external signals to be summed into the output of the modulation generator. The sensitivity of this output to the EXT MOD input is adjusted with the Ext Level control. |
| Port: Mic (Microphone Input) | Allows voice information to be incorporated into the internal modulation. Its level is set by the Ext Level control. |
| **Miscellaneous Controls** | |
| Intensity (R2) and Focus (R3) | Control the intensity and focus of the CRT by controlling the dc level on the INTENSITY LEVEL and FOCUS LEVEL signals going to the Scope Amplifier board (A2). |
| Dispr/Sweep (R1) | Controls the amplitude of the SYNTH SWEEP signal going to the RF Synthesizer and thus controls the dispersion of the spectrum-analyzer sweep or the frequency range of the sweep generator's output. |
| RF Scan | Scans the RF Synthesizer frequency up or down. When the optical encoder is rotated clockwise, the OPTICAL ENC B signal leads the OPTICAL ENC A signal by 90°. When the optical encoder is rotated counter clockwise, OPTICAL ENC A leads OPTICAL ENC B by 90°. The OPTICAL ENC A and B signals go to circuitry on the A15 board, which interfaces these signals with the Processor board. |
| **DISPLAY BOARD (A18A1) Controls** | |
| Keypad Switches (S1-S4)<br>S1 | Contains 12 switches which control the cursor and allow entry of numeric data. |
| S2, S3, S4 | Control system display, function, and modulation, respectively. The particular display, function, and modulation modes are indicated by LEDs DS1-DS24. Pressing any of these switches connects a unique combination of row and column lines. A PIA on the Processor board detects this, and the processor takes the appropriate action. |
| Display, Function and Modulation LEDs (DS1-DS24) | Indicate display, function, and modulation status. Control output to these LEDs is accomplished via AF BUS addresses 0, 1, and 2 on the Front-Panel Interface board. Latch-selects LS0, LS1, and LS2 are pulsed low to latch the data on the AF DATA BUS into latches on U6, U7, and U8, respectively, when the corresponding address is enabled on the AF ADD BUS. This data is decoded (as shown in Table 18-2) by U6, U7, and U8, and the appropriate LEDs are lit by drivers U1-U4. For more information on the AF BUS, refer to Section 15 on the Front-Panel Interface board. |
| Batt and AC LEDs (DS25, DS26) | Indicate application of dc and ac power, respectively. |
| Oven-Ready LED | Indicates when the oven has reached operating temperature on System Analyzers that have the ovenized frequency standard. |

## 18.3 DECODING FOR DISPLAY, FUNCTION AND MODULATION LEDs

Table 18-2 shows which LED is selected for each state of the AF DATA BUS when the appropriate latch-select (LS0, LS1, or LS2) is strobed low.

Table 18-2. Decoding for Display, Function, and Modulation LEDs

| Configuration of AF DATA BUSSES | | | | Display LED Selected (LS0 strobed low) | Function LED Selected (LS1 strobed low) | Modulation LED Selected (LS2 strobed low) |
|---|---|---|---|---|---|---|
| 0 | 1 | 2 | 3 | | | |
| 0 | 0 | 0 | 0 | Gen/Mon Mtr | FM | PL/DPL |
| 0 | 0 | 0 | 1 | Modulation | CW | PL/DPL INV |
| 0 | 0 | 1 | 0 | Spect Analyzer | AM | Tone A |
| 0 | 0 | 1 | 1 | Duplex Gen | SSB/DSBSC | Tone B |
| 0 | 1 | 0 | 0 | RF Memory | SWP 1-10 MHz | Tone Seq. |
| 0 | 1 | 0 | 1 | Signaling Seq | SWP 0.01-1 MHz | Tone Remote |
| 0 | 1 | 1 | 0 | Freq Counter | Not Allowed | Not Allowed |
| 0 | 1 | 1 | 1 | DVM/DIST | Not Allowed | Not Allowed |
| 1 | 0 | 0 | 0 | Ext Wattmeter | Not Allowed | Not Allowed |
| 1 | 0 | 0 | 1 | IF | Not Allowed | Not Allowed |
| 1 | 0 | 1 | 0 | Scope AC | Not Allowed | Not Allowed |
| 1 | 0 | 1 | 1 | Scope DC | Not Allowed | Not Allowed |
| 1 | 1 | 0 | 0 | Not Allowed | Not Allowed | Not Allowed |
| 1 | 1 | 0 | 1 | Not Allowed | Not Allowed | Not Allowed |
| 1 | 1 | 1 | 0 | Not Allowed | Not Allowed | Not Allowed |
| 1 | 1 | 1 | 1 | Not Allowed | Not Allowed | Not Allowed |

NOTES:
1. PARTIAL REFERENCE DESIGNATIONS ARE SHOWN; FOR COMPLETE DESIGNATION PREFIX WITH 1A14.
2. UNLESS OTHERWISE SPECIFIED: ALL RESISTORS ARE IN OHMS, ± 5PCT., 1/4 WATT. ALL VOLTAGES ARE DC.

WARNING:
STATIC-SENSITIVE PARTS
HANDLE APPROPRIATELY

| REF DESIGNATIONS | |
|---|---|
| HIGHEST USED | NOT USED |
| DS3 | DS1, DS2 |
| R23 | R24, R25 |
| S13 | S4-S7, S13 |
| VR2 | |

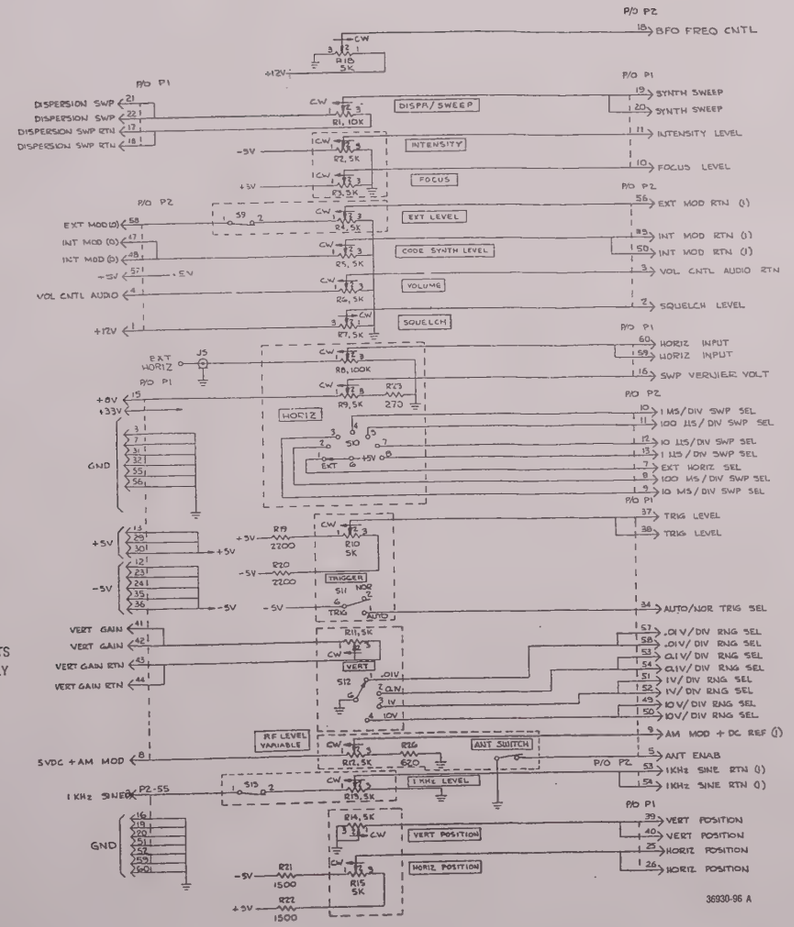


*Figure 18-1a. Front Panel Assembly – Schematic (Sheet 1 of 2)*

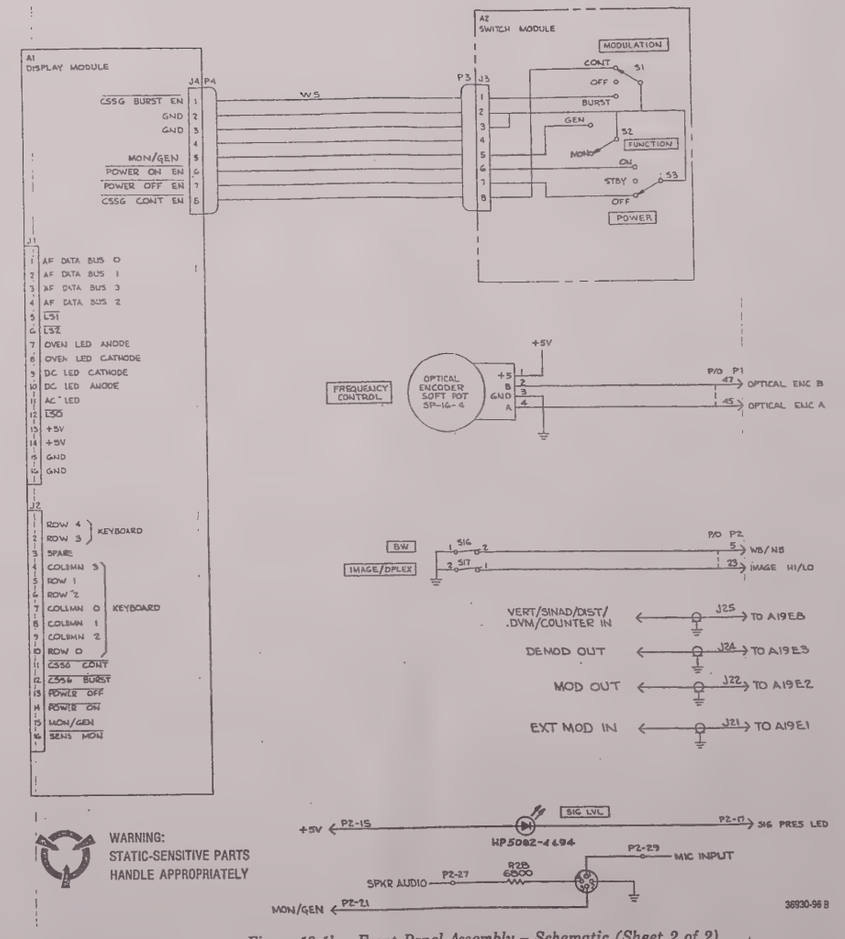


*Figure 18-1b. Front Panel Assembly – Schematic (Sheet 2 of 2)*

## FRONT PANEL

*Figure 18-2a. Photo and Parts List (Sheet 1 of 4)*

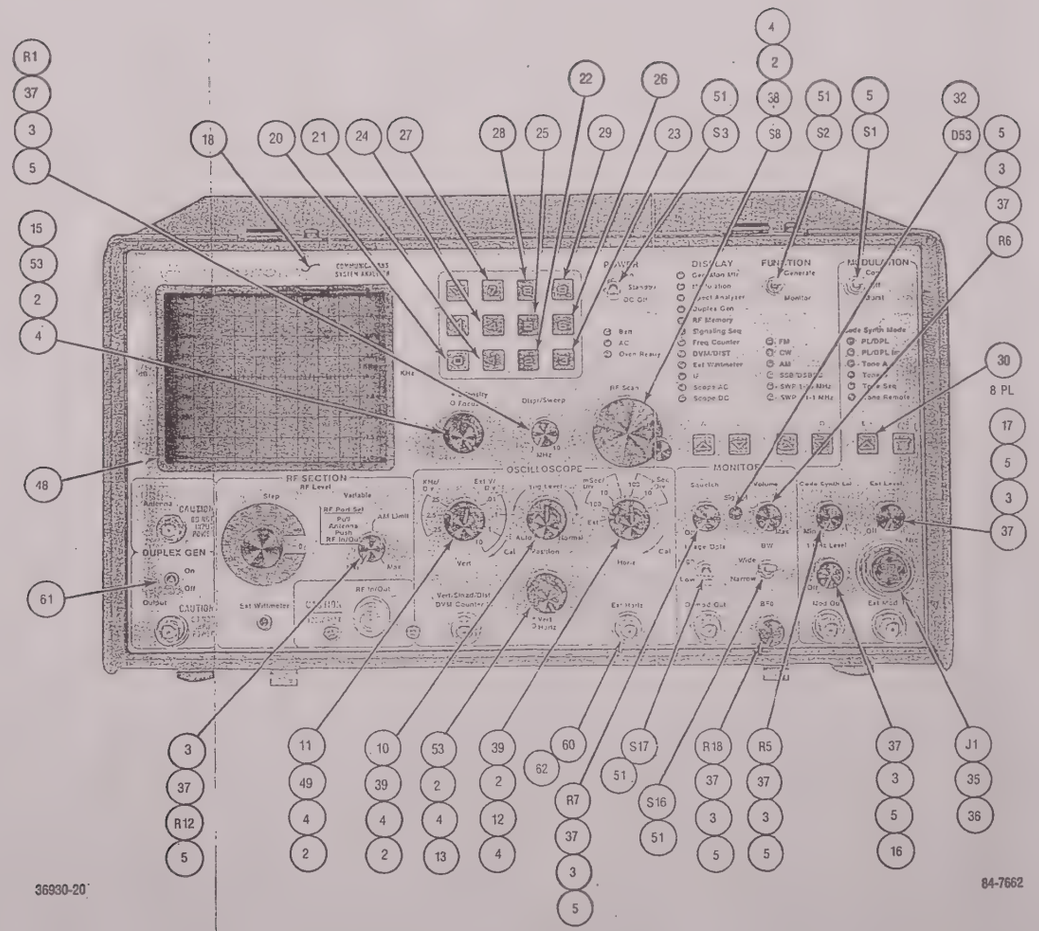


*Figure 18-2a. Front Panel Photo (See Sheet 4, p. 18-9, for Parts List)*

### FRONT PANEL ASSEMBLY (A18)

| Find No. | Qty. Req. | Part No. | Nomenclature | Part Value |
|---|---|---|---|---|
| 002 | 6 | 02-80342B23 | NUT, COMPONENT | 3/8-32 |
| 003 | 8 | 02-80342B24 | NUT, COMPONENT | 1/4-32 |
| 004 | 6 | 04-7691 | WASHER, LOCK | .375 |
| 005 | 8 | 04-115322 | WASHER, LOCK | .250 |
| 006 | 6 | 04-114370 | WASHER, FLAT | .125 |
| 007 | 6 | 04-9777 | WASHER, LOCK | .112 |
| 008 | 6 | 03-139919 | SCREW | 3112-40X.500 |
| 010 | 1 | 40-80335A78 | SWITCH, RESISTOR VARIABLE | SCOPE TRIG |
| 011 | 1 | 40-80335A77 | SWITCH, RESISTOR VARIABLE | SCOPE VERT. |
| 012 | 1 | 40-80335A76 | SWITCH/DUAL RESISTOR, VAR. | SCOPE HORIZ |
| 013 | 1 | 18-80346A13 | RESISTOR, VARIABLE | |
| 015 | 1 | 18-80346A13 | RESISTOR, VARIABLE | |
| 016 | 1 | 18-80346A18 | RESISTOR, VARIABLE/SWITCH | |
| 017 | 1 | 18-80346A18 | RESISTOR, VARIABLE/SWITCH | |
| 018 | 1 | 64-80343B59 | OVERLAY, FRONT PANEL | |
| 020 | 1 | 38-80331A49 | PUSHBUTTON, SWITCH-0 | |
| 021 | 1 | 38-80331A50 | PUSHBUTTON, SWITCH-1 | |
| 022 | 1 | 38-80331A51 | PUSHBUTTON, SWITCH-2 | |
| 023 | 1 | 38-80331A52 | PUSHBUTTON, SWITCH-3 | |
| 024 | 1 | 38-80331A53 | PUSHBUTTON, SWITCH-4 | |
| 025 | 1 | 38-80331A54 | PUSHBUTTON, SWITCH-5 | |
| 026 | 1 | 38-80331A55 | PUSHBUTTON, SWITCH-6 | |
| 027 | 1 | 38-80331A56 | PUSHBUTTON, SWITCH-7 | |
| 028 | 1 | 38-80331A57 | PUSHBUTTON, SWITCH-8 | |
| 029 | 1 | 38-80331A58 | PUSHBUTTON, SWITCH-9 | |
| 030 | 8 | 38-80331A48 | PUSHBUTTON, SWITCH, DELTA | |
| 031 | 2 | 09-80340B46 | CONNECTOR | 60 PIN W/O EARS |
| 032 | 1 | 15-80341B26 | HOLDER | |
| 035 | 1 | 02-48207 | NUT, COMP | |
| 036 | 1 | 04-00007699 | WASHER, COMP | |
| 037 | 8 | 36-80343B03 | KNOB | 1/8 SHAFT |
| 038 | 1 | 36-80343B04 | KNOB | 1/4 SHAFT |
| 039 | 2 | 36-80343B01 | KNOB, DUAL | 1/8-1/4 SHAFT |
| 047 | 1 | 75-80335A50 | ISOLATOR, FRONT CRT | |
| 048 | 1 | 13-80331A99 | BEZEL | |
| 049 | 1 | 36-80342B99 | KNOB, DUAL | 1/8-1/4 SHAFT |
| 051 | 5 | 04-3997 | WASHER, FLAT | .250 |
| 052 | 1 | 30-80343B91 | CABLE ASSEMBLY, RIBBON | |
| 053 | 2 | 36-80343B02 | KNOB, DUAL | .158-.238 SHAFT |
| 054 | 1 | 09-80331A95 | SOCKET, SOLDER DIP | 8 PIN |
| 055 | 2 | 30-80343B90 | CABLE ASSEMBLY, RIBBON | |
| 057 | 2 | 55-80335A89 | HINGE | |
| 058 | 2 | 55-00847016 | STRIKE, CATCH | |
| 059 | 8 | 03-80341B37 | SCREW, PH ASSEMBLED WASHER | 6-32X.312 |
| 060 | 1 | 30-80343B96 | CABLE ASSEMBLY | A18J5/FLEX |
| 061 | 2 | 03-138651 | SCREW | 2-56X.125 |
| 062 | 1 | 04-2635 | WASHER, LOCK | .500 |
| 063 | 1 | 14-15140A08 | INSULATOR | |
| A 001 | 1 | RTC-4049A | DISPLAY BOARD ASSY, A18A1 | |
| DS003 | 1 | 48-84404E03 | LED | |
| J 001 | 1 | 09-00830418 | CONNECTOR, MIC | |
| R 001 | 1 | 18-80346A15 | RESISTOR, VAR, DISPR/SWP | 10K-10-1/4 |
| R 005 | 1 | 18-80346A16 | RESISTOR, VAR, INT, MOD, LVL | 5K |
| R 006 | 1 | 18-80346A14 | RESISTOR, VARIABLE | 5K |
| R 007 | 1 | 18-80346A14 | RESISTOR, VARIABLE | 5K |
| R 012 | 1 | 18-80342B31 | RESISTOR, VARIABLE | 5K WITH SWITCH |
| R 018 | 1 | 18-80346A14 | RESISTOR, VAR | 5K |
| R 019 | 1 | 06-11009C57 | RESISTOR | 2.2K-5-1/4 |
| R 020 | 1 | 06-11009C57 | RESISTOR | 2.2K-5-1/4 |
| R 021 | 1 | 06-11009C53 | RESISTOR | 1.5K-5-1/4 |
| R 022 | 1 | 06-11009C53 | RESISTOR | 1.5K-5-1/4 |
| R 023 | 1 | 06-11009C35 | RESISTOR | 270-5-1/4 |
| R 026 | 1 | 06-11009C44 | RESISTOR | 620-5-1/4 |
| R 028 | 1 | 06-11045A69 | RESISTOR | 6.8K-5-1/2 |
| S 001 | 1 | 40-80335A82 | SWITCH, TOGGLE | |
| S 002 | 1 | 40-80335A80 | SWITCH, TOGGLE | |
| S 003 | 1 | 40-80335A81 | SWITCH, TOGGLE | |
| S 008 | 1 | 18-80340B84 | SOFTPOT, RF SCAN | |
| S 016 | 1 | 40-80335A80 | SWITCH, TOGGLE | SPST, WB/NB |
| S 017 | 1 | 40-80335A80 | SWITCH, TOGGLE | SPST, IMAGE |

**Cable Assembly (A18J5/FLEX)**
**30-80343B96**

| | | | | |
|---|---|---|---|---|
| 002 | 1 | 28-80342B90 | CONNECTOR, BNC | |

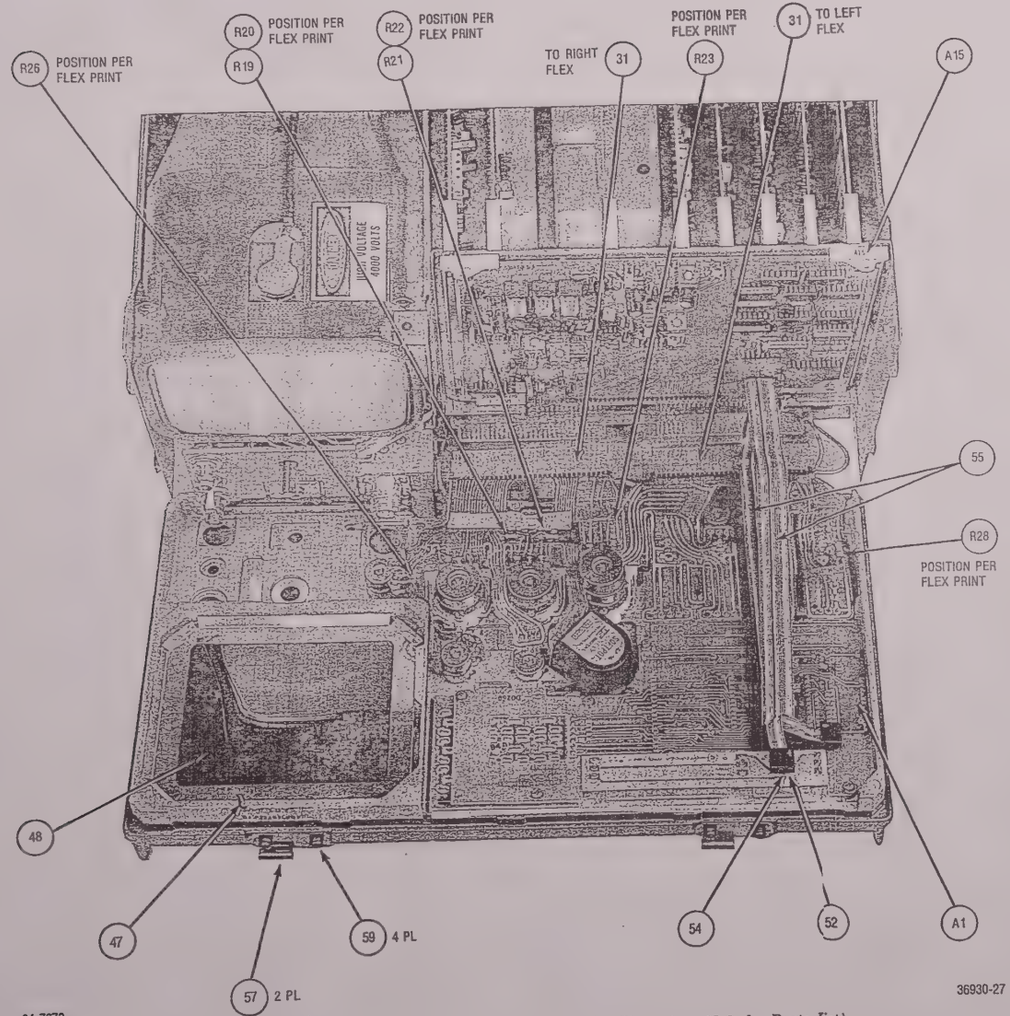


84-7673

*Figure 18-2b. Inside Front Panel – Photo (See Sheet 4, p. 18-9, for Parts List)*

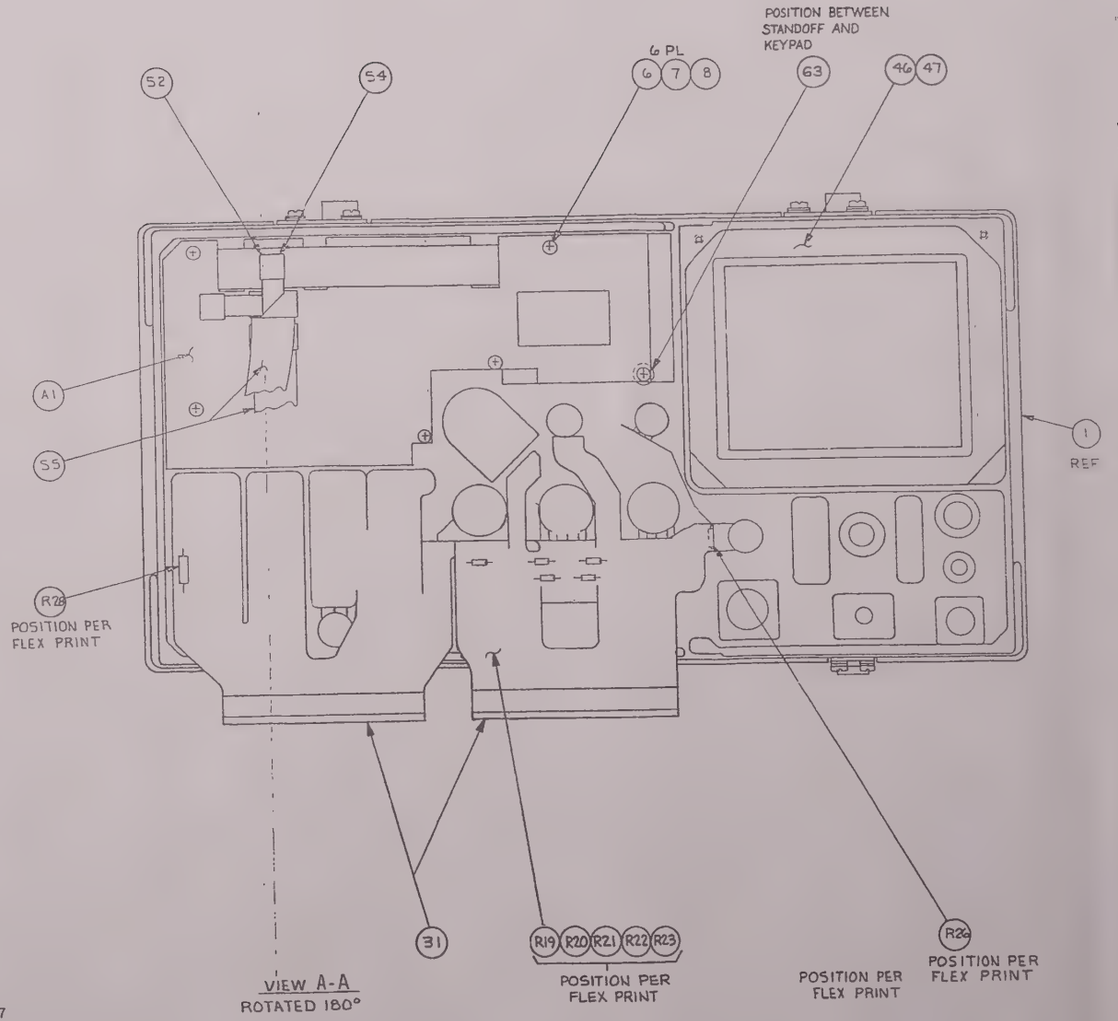


*Figure 18-2c. Inside Front Panel – Drawing (See Sheet 4, p. 18-9, for Parts List)*

## FRONT PANEL ASSEMBLY

### DISPLAY BOARD (A18A1)

(RTC-4049A)

*Figure 18-3. Schematic*

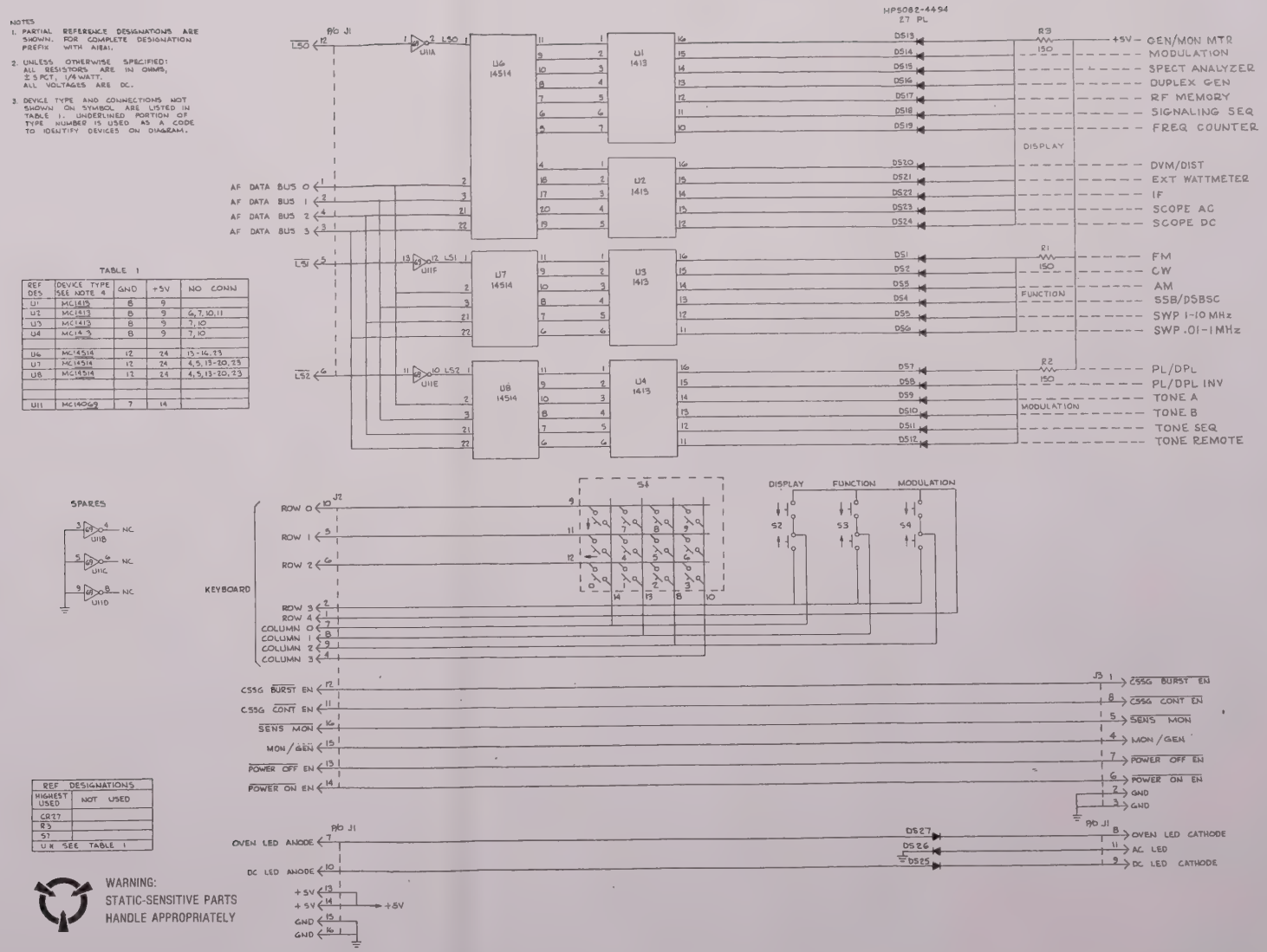

*Figure 18-4. Printed Wiring Board Assembly and Parts List*

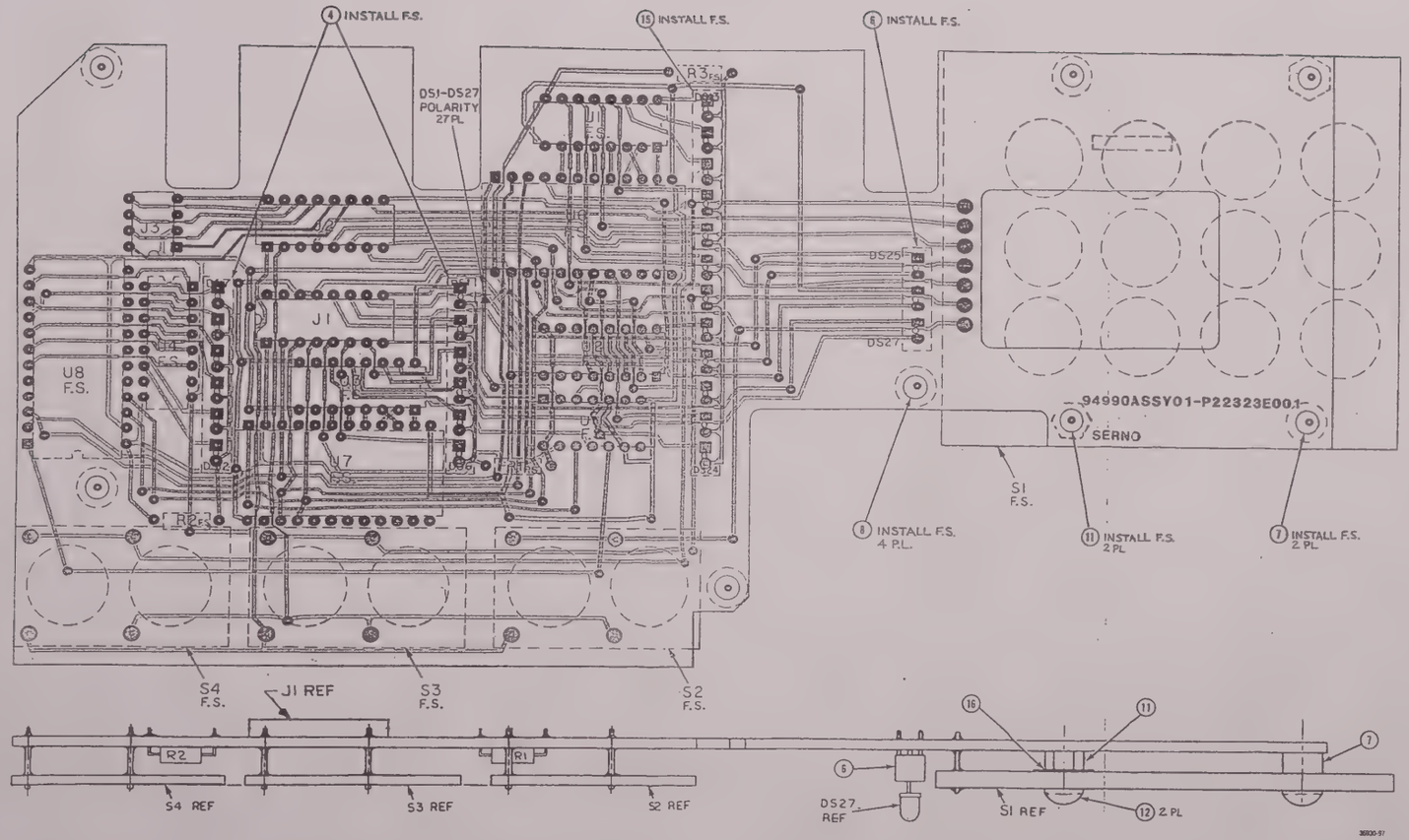


**DISPLAY BOARD ASSEMBLY (A18A1)**
RTC-4049A

| Find No. | Qty. Req. | Part No. | Nomenclature | Part Value |
|---|---|---|---|---|
| C04 | 2 | 09-80375B57 | SOCKET | 12 PIN |
| C06 | 1 | 09-80375B58 | SOCKET | 6 PIN |
| C07 | 2 | 43-80375B60 | SPACER | |
| C08 | 4 | 43-80375B61 | SPACER | |
| C11 | 2 | 09-80375B74 | SPACER, SWAGE | |
| C12 | 2 | 03-139581 | SCREW | .112-40X.312 |
| C15 | 1 | 09-80375B59 | SOCKET | 24 PIN |
| C16 | 1 | 14-15140A08 | INSULATOR | |
| DS001 | 1 | 48-80396A26 | LED | |
| DS002 | 1 | 48-80396A26 | LED | |
| DS003 | 1 | 48-80396A26 | LED | |
| DS004 | 1 | 48-80396A26 | LED | |
| DS005 | 1 | 48-80396A26 | LED | |
| DS006 | 1 | 48-80396A26 | LED | |
| DS007 | 1 | 48-80396A26 | LED | |
| DS008 | 1 | 48-80396A26 | LED | |
| DS009 | 1 | 48-80396A26 | LED | |
| DS010 | 1 | 48-80396A26 | LED | |
| DS011 | 1 | 48-80396A26 | LED | |
| DS012 | 1 | 48-80396A26 | LED | |
| DS013 | 1 | 48-80396A26 | LED | |
| DS014 | 1 | 48-80396A26 | LED | |
| DS015 | 1 | 48-80396A26 | LED | |
| DS016 | 1 | 48-80396A26 | LED | |
| DS017 | 1 | 48-80396A26 | LED | |
| DS018 | 1 | 48-80396A26 | LED | |
| DS019 | 1 | 48-80396A26 | LED | |
| DS020 | 1 | 48-80396A26 | LED | |
| DS021 | 1 | 48-80396A26 | LED | |
| DS022 | 1 | 48-80396A26 | LED | |
| DS023 | 1 | 48-80396A26 | LED | |
| DS024 | 1 | 48-80396A26 | LED | |
| DS025 | 1 | 48-80396A26 | LED | |
| DS026 | 1 | 48-80396A26 | LED | |
| DS027 | 1 | 48-80396A26 | LED | |
| J 001 | 1 | 09-80331A97 | SOCKET, SOLDER DIP | 16 PIN |
| J 002 | 1 | 09-80331A97 | SOCKET, SOLDER DIP | 16 PIN |
| J 003 | 1 | 09-80331A95 | SOCKET, SOLDER DIP | 8 PIN |
| R 001 | 1 | 06-11009C29 | RESISTOR | 150-5-1/4 |
| R 002 | 1 | 06-11009C29 | RESISTOR | 150-5-1/4 |
| R 003 | 1 | 06-11009C29 | RESISTOR | 150-5-1/4 |
| S 001 | 1 | 40-80395A32 | SWITCH, PUSHBUTTON | 12 POS |
| 001 | 1 | 40-80335A54 | SWITCH ASSEMBLY | 3 × 4 |
| S 002 | 1 | 40-80369A09 | SWITCH, PUSHBUTTON | 2 POS |
| 001 | 1 | 40-80369A10 | SWITCH, STRIP | M/F 1KS208 |
| S 003 | 1 | 40-80369A09 | SWITCH, PUSHBUTTON | 2 POS |
| 001 | 1 | 40-80369A10 | SWITCH, STRIP | M/F 1KS208 |
| S 004 | 1 | 40-80369A09 | SWITCH, PUSHBUTTON | 2 POS |
| 001 | 1 | 40-80369A10 | SWITCH, STRIP | M/F 1KS208 |
| U 001 | 1 | 51-82884L70 | INTEGRATED CIRCUIT | |
| U 002 | 1 | 51-82884L70 | INTEGRATED CIRCUIT | |
| U 003 | 1 | 51-82884L70 | INTEGRATED CIRCUIT | |
| U 004 | 1 | 51-82884L70 | INTEGRATED CIRCUIT | |
| U 006 | 1 | 51-82884L32 | INTEGRATED CIRCUIT | |
| U 007 | 1 | 51-82884L32 | INTEGRATED CIRCUIT | |
| U 008 | 1 | 51-82884L32 | INTEGRATED CIRCUIT | |
| U 011 | 1 | 51-85596E02 | INTEGRATED CIRCUIT | |

## FRONT PANEL LEFT AND RIGHT FLEXES

*Figure 18-2d. and 18-2e. Printed Wiring Board Assemblies and Parts List (Sheet 3 of 4)*

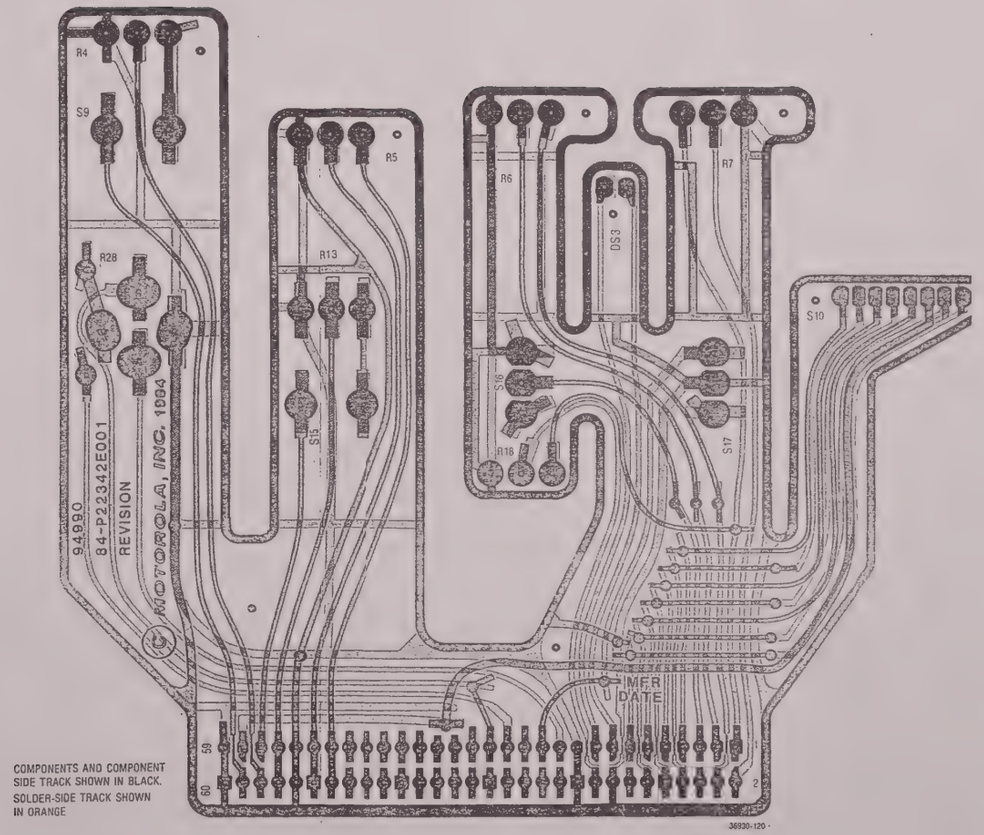


*Figure 18-2d. Front Panel Left Flex (Display) (See Sheet 4, p. 18-9, for Parts List)*

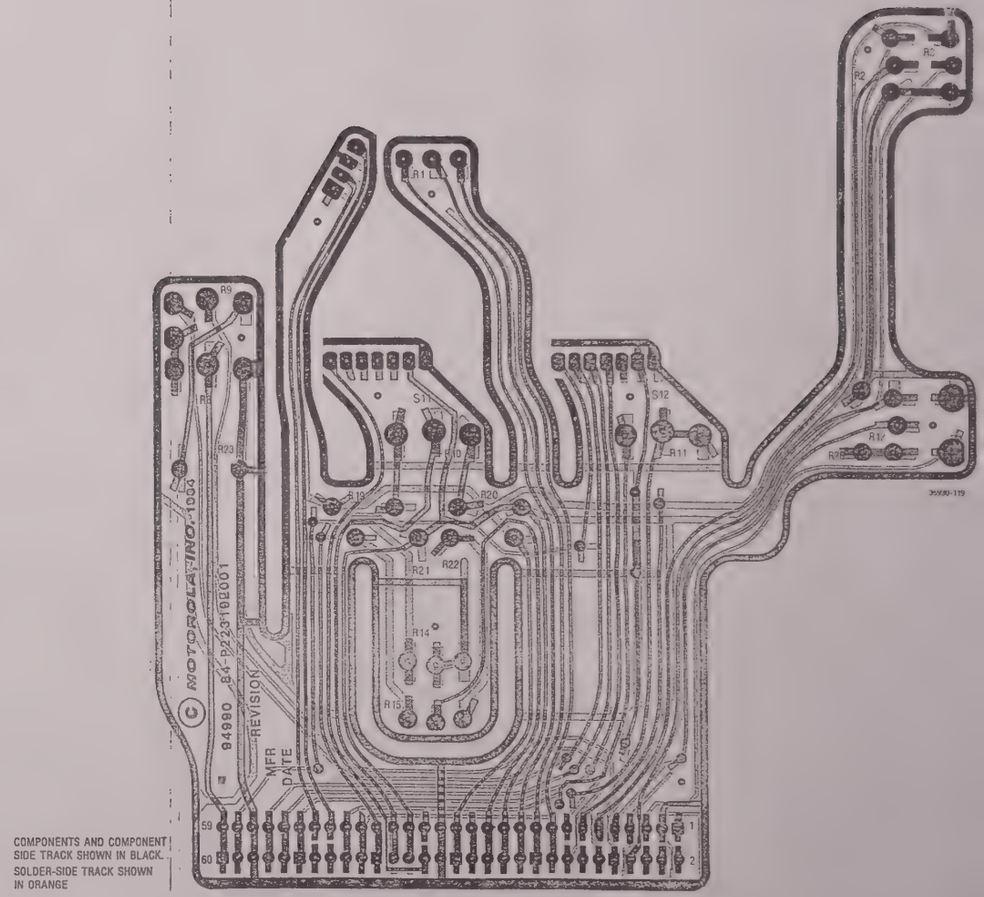


*Figure 18-2e. Front Panel Right Flex (Scope) (See Sheet 4, p. 18-9, for Parts List)*

# SECTION 19.
# BATTERY ASSEMBLY

## 19.1 DESCRIPTION

The RTP-1002A Battery Assembly consists of a battery pack and charger designed to be mounted to the back of the R2001D Communications System Analyzer (Figure 19-1). The unit contains battery capacity to operate the System Analyzer for approximately one hour. A constant-current charging system can recharge the batteries in 16 hours.

A schematic of the battery pack is shown at the end of the section in Figure 19-2, and the printed wiring board assembly and a parts location detail are coordinated with the parts list in Figure 19-3.

## 19.2 INSTALLATION

The battery pack is quickly installed on the R2001D System Analyzer. With the Analyzer disconnected from the ac line, remove the blower ac connector from the socket on the rear panel of the unit. Remove the two thumbscrews and clips that hold the blower to the rear panel. Lift the blower off and set it aside, noting the position of the blower in relation to the two locating pins on the rear panel. Reverse this procedure to reinstall the blower. Put the caution label (P/N 54-80379A76) on the rear panel of your System Analyzer.

Place the battery pack's left edge tabs into the left feet slots on the Analyzer's rear panel. Two captive screws on the battery pack's right edge engage threaded holes in the rear panel's right feet. Tighten these screws snugly, but do not overtighten. Install the cable from the battery pack in the DC IN jack on the rear panel of the unit, and reconnect the ac line cord.

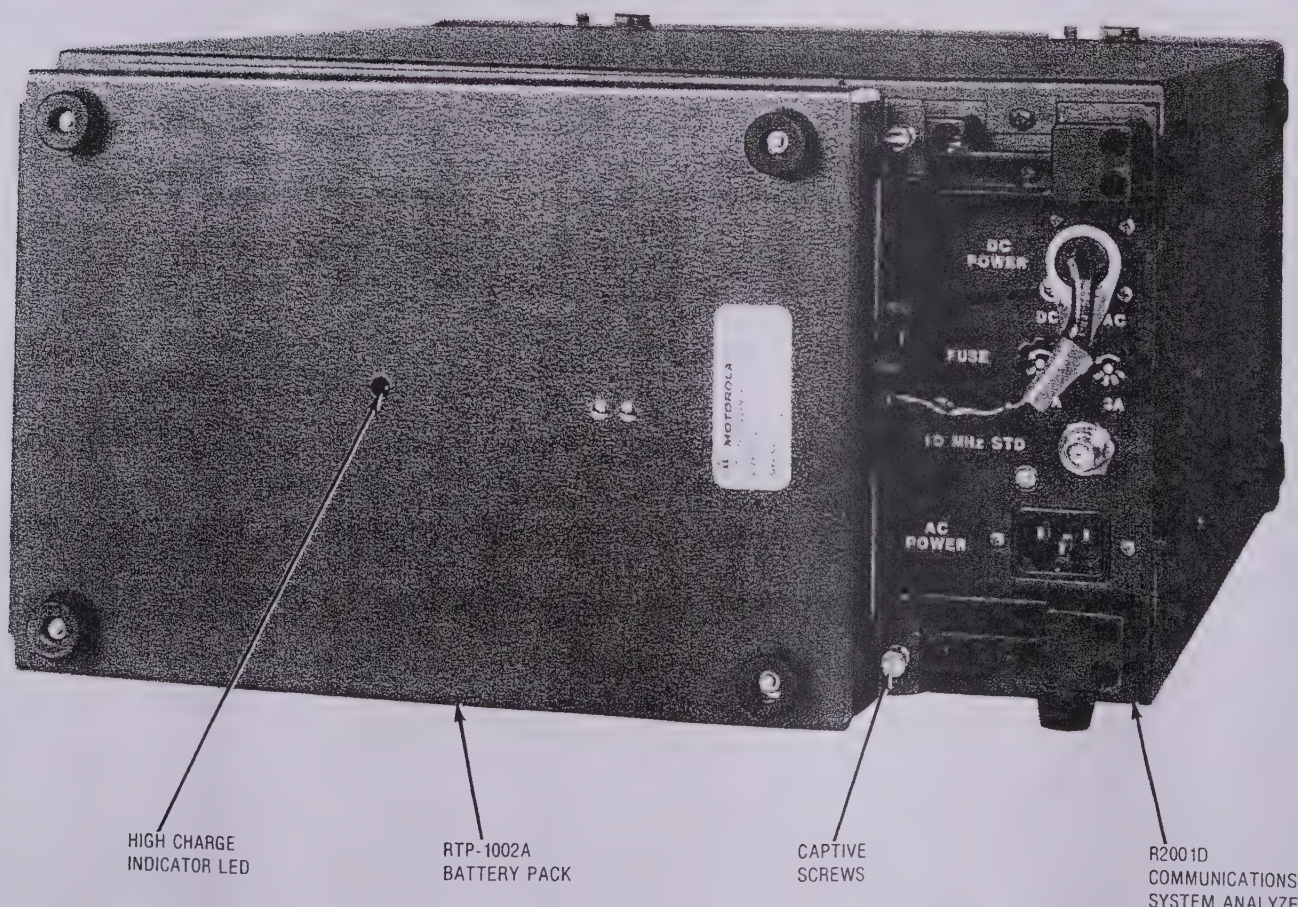


84-7665

*Figure 19-1. Battery Pack – Mounting Detail*

36930-23

## 19.3 OPERATION

The battery pack is automatically engaged when no ac power is present, and when the POWER switch is set at either ON or STANDBY. When ac power is applied, the Analyzer automatically switches the battery pack out of the circuit and draws its power from the ac power source.

When the POWER switch is set at OFF or STANDBY, and ac power is applied to the System Analyzer, the battery pack draws dc current from the Analyzer to activate the charging circuit. The charging circuit delivers approximately 750 mA of current until the battery voltage reaches 14V. As the battery voltage reaches 14V, the current drops to approximately 25 mA, and the high-charge indicator LED goes out.

To extend the time the battery can operate the System Analyzer, keep the unit's POWER switch set at STANDBY whenever possible. Because of the low trickle-charge rate, the batteries can be left charging indefinitely without damage from overcharging.

At high ambient temperature, if you plan to operate the Analyzer from the ac line for long periods of time, remove the battery pack and reinstall the blower assembly.

***CAUTION***

*Do NOT permit battery discharge below 10.4 Vdc (as indicated on the CRT in DVM display mode); immediately turn the unit OFF. Allowing battery discharge below this level may permanently damage the battery. To recharge the batteries, plug the System Analyzer into ac power (117/234 Vac) with the POWER switch set at OFF or STANDBY.*

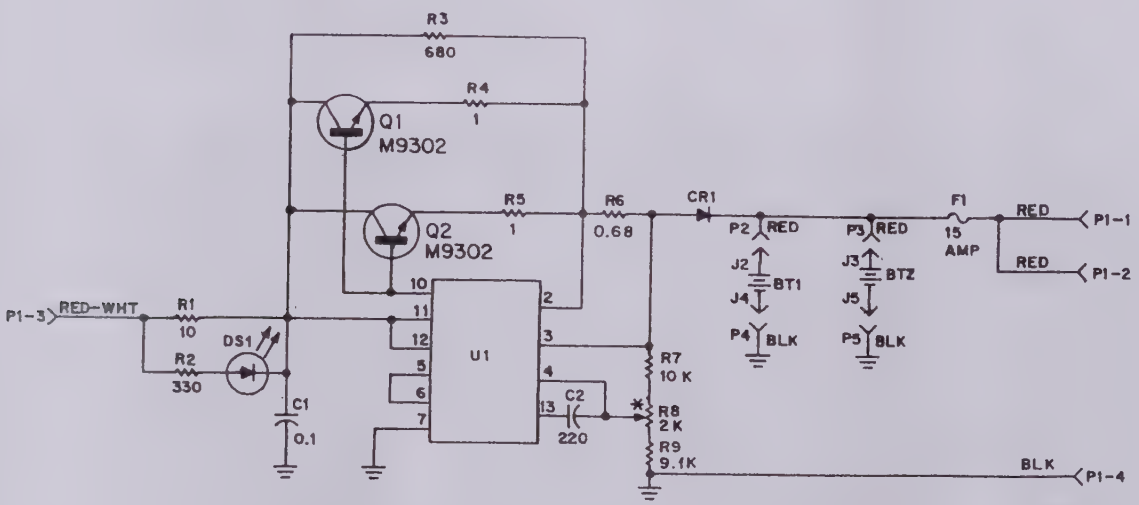


* WITH THE BATTERIES REMOVED (BT1 AND BT2) AND A 30-OHM; 10 WATT RESISTOR IN PLACE OF THE BATTERIES, SET R8 FOR 14.45V ± 50MV USING A DIGITAL VOLTMETER ACROSS THE BATTERY TERMINALS.

*Figure 19-2. Battery Pack – Schematic*

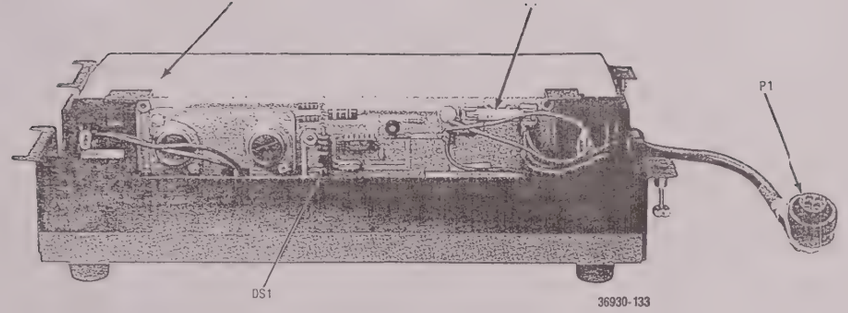


*Figure 19-3b. Battery Pack – Parts Location Detail*

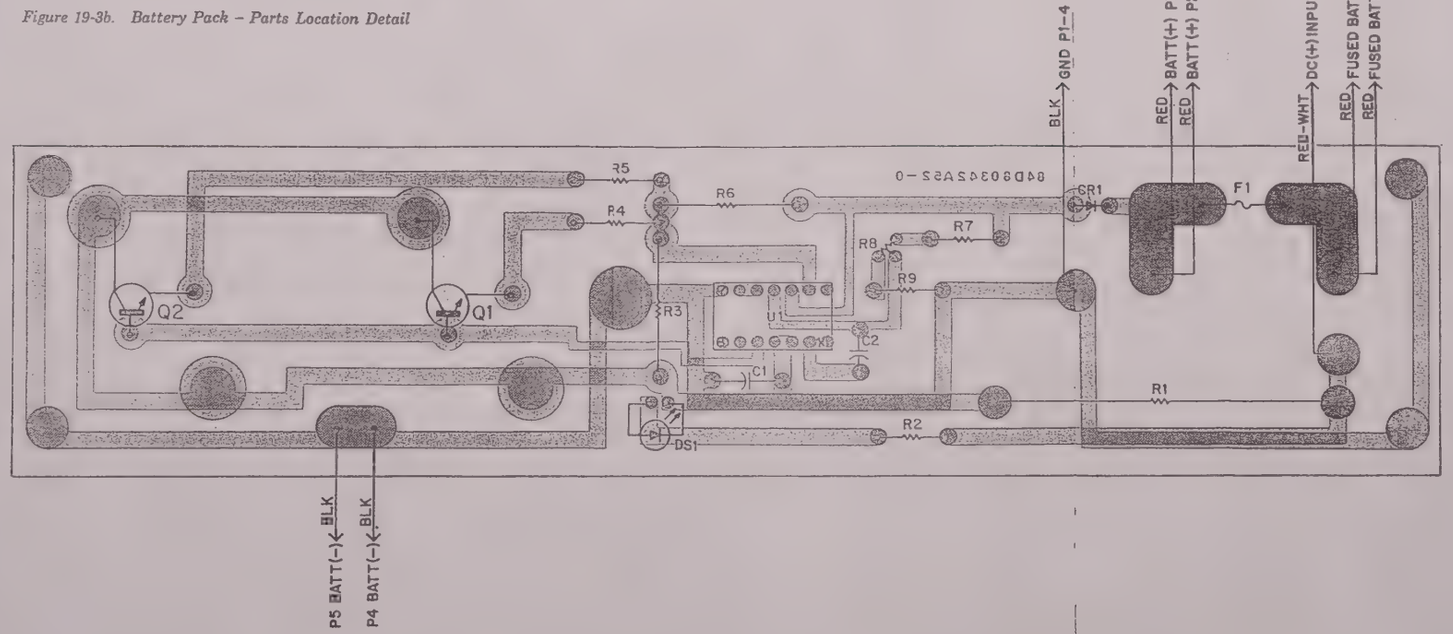


COMPONENTS AND COMPONENT SIDE TRACK SHOWN IN BLACK. SOLDER-SIDE TRACK SHOWN IN ORANGE

*Figure 19-3a. Battery Pack – Printed Wiring Board Assembly*

RTP-1002A

| Find No. | Qty. Req. | Part No. | Nomenclature | Part Value |
|---|---|---|---|---|
| BT001 | 1 | 60-80340A88 | BATTERY, 12V | 6-CELL |
| BT002 | 1 | 60-80340A88 | BATTERY, 12V | 6-CELL |
| C 001 | 1 | 9-80956J19 | CAPACITOR, FIXED | .1µF-10-250 |
| C 002 | 1 | 21-83596E10 | CAPACITOR, FIXED | 220pF-20-500 |
| CR001 | 1 | 48-82525G01 | DIODE, SILICON | |
| DS001 | 1 | 48-82019L05 | LED | |
| F 001 | 1 | 65-804906 | FUSE | 15A SLOW BLOW |
| Q 001 | 1 | 48-859302 | TRANSISTOR | NPN; TYPE M9302 |
| Q 002 | 1 | 48-859302 | TRANSISTOR | NPN; TYPE M9302 |
| R 001 | 1 | 17-80344A60 | RESISTOR | 10-10-10 |
| R 002 | 1 | 6-124C37 | RESISTOR | 330-10-1/4 |
| R 003 | 1 | 6-126C45 | RESISTOR | 680-10-1 |
| R 004 | 1 | 6-125B70 | RESISTOR | 1-5-1/2 |
| R 005 | 1 | 6-125B70 | RESISTOR | 1-5-1/2 |
| R 006 | 1 | 17-80344A71 | RESISTOR | .68-5-2 |
| R 007 | 1 | 6-124A73 | RESISTOR | 10K-5-1/4 |
| R 008 | 1 | 18-80342A10 | RESISTOR, VARIABLE | 2K-20-1/2 |
| R 009 | 1 | 6-124A72 | RESISTOR | 9.1K-5-1/4 |
| U 001 | 1 | 51-80342A59 | INTEGRATED CIRCUIT | MC1723CL |
| | 1 | 15-80340A92 | COVER, BATTERY CASE | |
| | 4 | 3-120938 | SCREW, MACHINE | 4-40 X 5/16" |
| | 4 | 4-7667 | WASHER, LOCK: NO.4 EXTERNAL TOOTH | |
| | 1 | 64-80342A54 | PLATE, HEATSINK | |
| | 4 | 2-7005 | NUT, HEX | 6-32 |
| | 4 | 4-7666 | WASHER, LOCK: NO.6 EXTERNAL TOOTH | |
| | 1 | 14-80340A91 | INSULATOR BOARD | |
| | 4 | 75-82566B01 | FOOT, RUBBER | |
| | 4 | 3-80342A46 | SCREW, MACHINE | 6-32 X 1/2" |
| | 5 | 3-136774 | SCREW, MACHINE | 4-40 X 1/4" |
| | 2 | 3-132840 | SCREW, MACHINE | 8-32 X 5/8" |
| | 5 | 4-7667 | WASHER, LOCK: NO.4 EXTERNAL TOOTH | |
| | 1 | 54-80379A76 | LABEL, CAUTION | |
| | 1 | 42-850925 | CLAMP | |

**Cable Assembly (P1)**
**(1-80303A91)**

| | | | |
|---|---|---|---|
| 1 | 15-10811A08 | HOUSING, CONNECTOR | 4-PIN |
| 4 | 9-83741F01 | CONTACT, RECEPTACLE | |
| 1 | 42-80340A90 | CLAMP, CABLE | |
| 1 | 2-2888 | NUT, HEX | 5/8-24 |

**Battery Case**
**(1-80304A71)**

| | | | |
|---|---|---|---|
| 1 | 27-803J5A41 | CASE, BATTERY | |
| 2 | 3-80340A89 | SCREW, CAPTIVE | 6-32 X 21/32" |
| 1 | 41-80342A53 | SPRING, CLIP | |

**Circuit Board Assembly**
**(1-80304A72)**

| | | | |
|---|---|---|---|
| 2 | 42-82690A01 | CLIP, FUSEHOLDER | |
| 4 | 43-865090 | STANDOFF, THREADED | |

**Lead Assembly, Battery (Red)**
**(1-80304A73)**

| | | | |
|---|---|---|---|
| 1 | 30-10310A26 | WIRE, NO. 16 STRANDED | 4-1/2" |
| 1 | 29-859118 | CONTACT, RECEPTACLE | |

**Lead Assembly, Battery (Black)**
**(1-80304A74)**

| | | | |
|---|---|---|---|
| 1 | 10-134301 | WIRE, NO. 16 STRANDED | 4-1/2" |
| 1 | 29-859118 | CONTACT, RECEPTACLE | |

(RTP-1002A)

*Figure 19-3a. Printed Wiring Board Assembly and Parts List*

*Figure 19-3b. Parts Location Detail and Parts List*

# SECTION 20.
# CELLULAR TELEPHONE TEST OPTION

## 20.1 DESCRIPTION

Cellular telephones can be tested using the Cellular-Telephone Test board. By selecting tests from a menu on the screen, the operator can use the board to provide the data and generate the tones necessary to communicate with a Cellular telephone. This board also contains circuitry to test a Cellular telephone in the Manual Mode and to send the results of an Auto-Test to a printer.

A block diagram of the Cellular-Telephone Test board is shown at the end of the section in Figure 20-1, a schematic in Figure 20-2, and the printed wiring board assembly and parts list in Figure 20-3.

## 20.2 THEORY OF OPERATION

### 20.2.1 TRANSMITTED DATA

The system microprocessor generates all data transmitted to the Cellular telephone under test. A synchronous serial-data adapter (SSDA) (U8) on the Cellular-Telephone Test board transforms the data from a parallel to a serial format. The transmitted data is then Manchester-encoded at U1 and filtered by U24.

The transmit clock is divided down to 10 kHz from the 3.84-MHz master oscillator by U3 and U7.

### 20.2.2 RECEIVED DATA

The data received from the Cellular telephone under test is filtered by U40. A hard limiter (U17) shapes the Manchester-encoded data to CMOS levels.

The data enters a synchronizer IC (U3) where a bit-sync detector derives the receive clock. The received data is then Manchester decoded, and the synchronizer looks for word sync, which is an 11-bit sequence. When it detects word sync, U3 signals the SSDA that valid data is available. The data is then clocked into the SSDA and read by the microprocessor.

### 20.2.3 CONTROL

The microprocessor controls all data and signal paths through U9, an on-board peripheral-interface adapter (PIA). This PIA disables all analog signals when data is being transmitted, and disables the data path when data is not being transmitted.

### 20.2.4 MODULATION

The audio-modulation paths are enabled or disabled, depending on whether or not a Cellular test is in progress. As long as there is no Cellular test, the EXT MOD RTN (O), INT MOD RTN (O), and 1 KHz SINE RTN (O) paths are enabled. During a Cellular test, whenever data is not being transmitted, MIC IN, EXT MOD INPUT, INT MOD (I) and 1 KHz SINE RTN (O) are enabled.

During a Cellular test, the System Analyzer transmits a supervisory audio tone (SAT) with a frequency of 5970 Hz, 6000 Hz, or 6030 Hz. This tone comes to the board via the INT MOD (I) line. The SAT passes through an automatic gain control (AGC) circuit (U23 and U25). U25B full-wave rectifies the SAT, and amplifier U23A sets the output level. U23B then compares the average voltage of the rectified signal with 2.5 Vdc. The output of U23B drives the gate of Q2, which acts as a voltage-variable resistor to attenuate the input SAT.

The microphone input port (Mic) on the front panel allows voice to be transmitted to the Cellular telephone under test. The incoming signal is amplified and filtered before it enters compressor U21, which condenses amplitude variations by attenuating high-level signals and amplifying low-level ones. The signal enters a pre-emphasis circuit, and then, to limit the FM deviation to a specified level, an instantaneous deviation control (IDC) circuit. To attenuate harmonics created by the IDC, a splatter filter follows.

The 1 KHz SINE RTN (O) line can be used to measure receiver distortion and sensitivity. EXT MOD INPUT can be used to add an external modulation source.

### 20.2.5 10-KHz DETECTION

Detect circuitry measures the duration of the Cellular telephone's 10-kHz signaling tone. The received signaling tone comes in via DEMOD CAL AUDIO, where it is filtered to eliminate noise and unwanted signals before becoming an input for a 10-kHz detector (U12). The output of this detector is normally a logic 1. However, when it detects a 10-kHz signal, U12 outputs a logic 0 for the duration of the 10-kHz signal. A timer IC (U10) measures the duration of the logic 0.

### 20.2.6 MANUAL-MODE CONTROL

With the Manual-Mode Test, the transceiver portion of the Cellular telephone can be manually tested. The Manual-Mode Test connector (CELL BUS) is located on the back of the System Analyzer.

A handshaking (asynchronous) process transfers data to and from the transceiver. The microprocessor controls the signals and their direction through a PIA (U15). All control and data lines are buffered by GPIB transceivers U35 and U36.

### 20.2.7 PRINTER

The Manual-Mode Test connector also contains the three data and control lines necessary to interface with a printer. The Cellular-Telephone Test board provides the circuitry for these three lines: a ground line (GND), the PRINTER DATA line, which serially outputs data to the printer, and the DATA TERMINAL READY line, which is an input to the Cellular-Telephone Test board. The output-signal levels are in accordance with EIA RS232C.

The printer can provide a hard copy of the results from the Cellular Auto-Test. It can also print out test results displayed on any screen.

*Figure 20-1. Block Diagram*

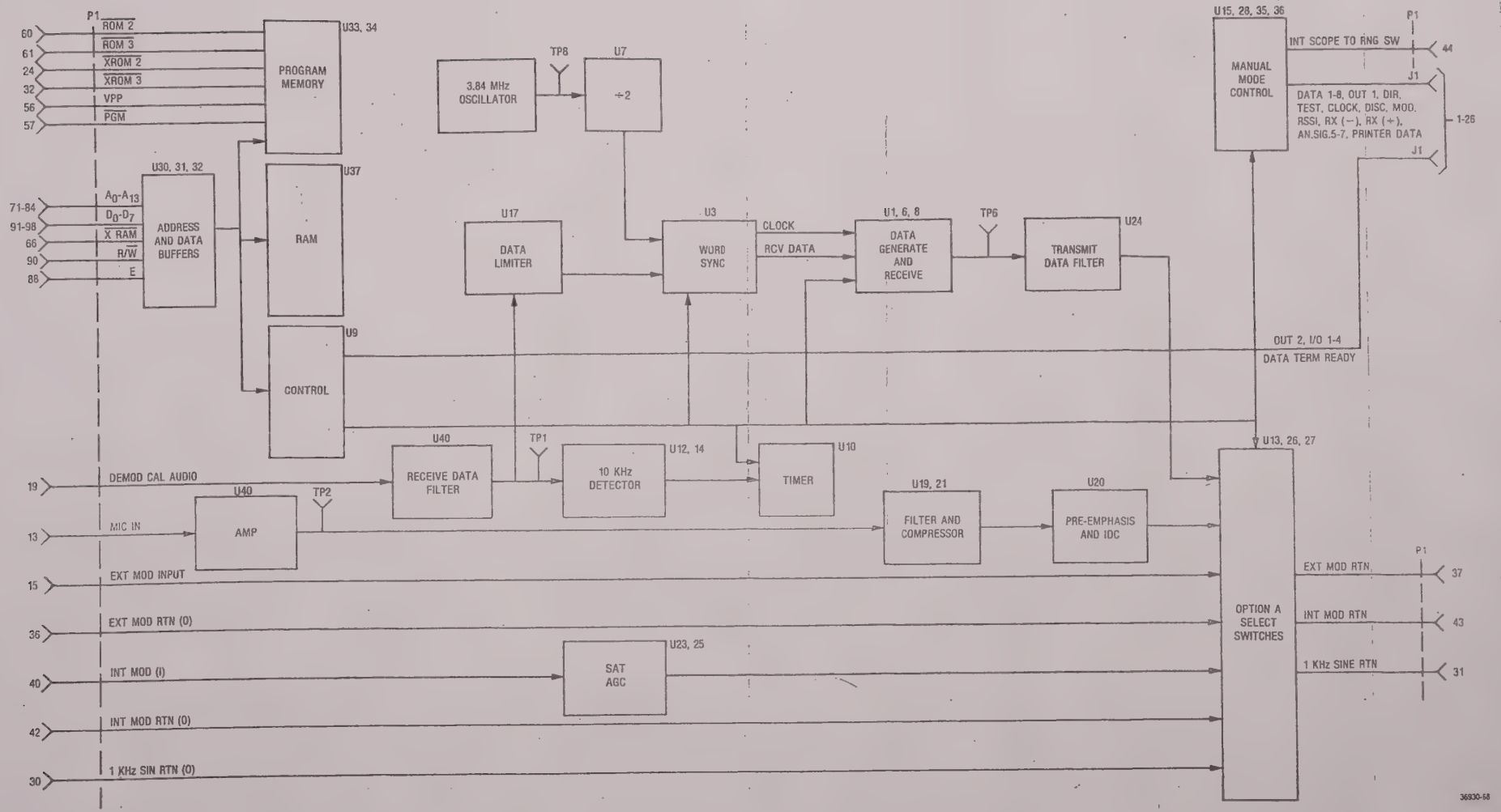

## CELLULAR-TELEPHONE TEST OPTION

(RTC-1012A)

*Figure 20-2a. Schematic (Sheet 1 of 2)*

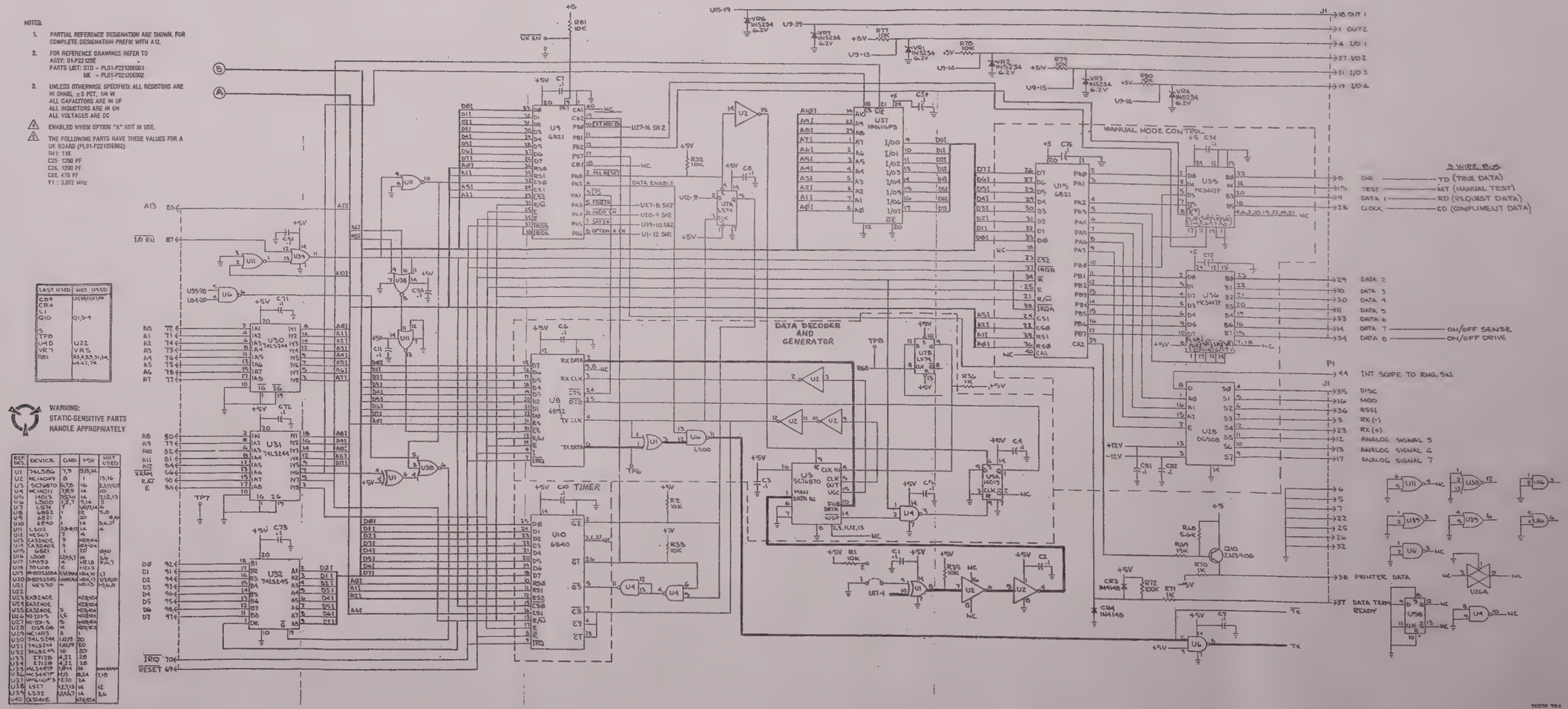

*Figure 20-2b. Schematic (Sheet 2 of 2)*

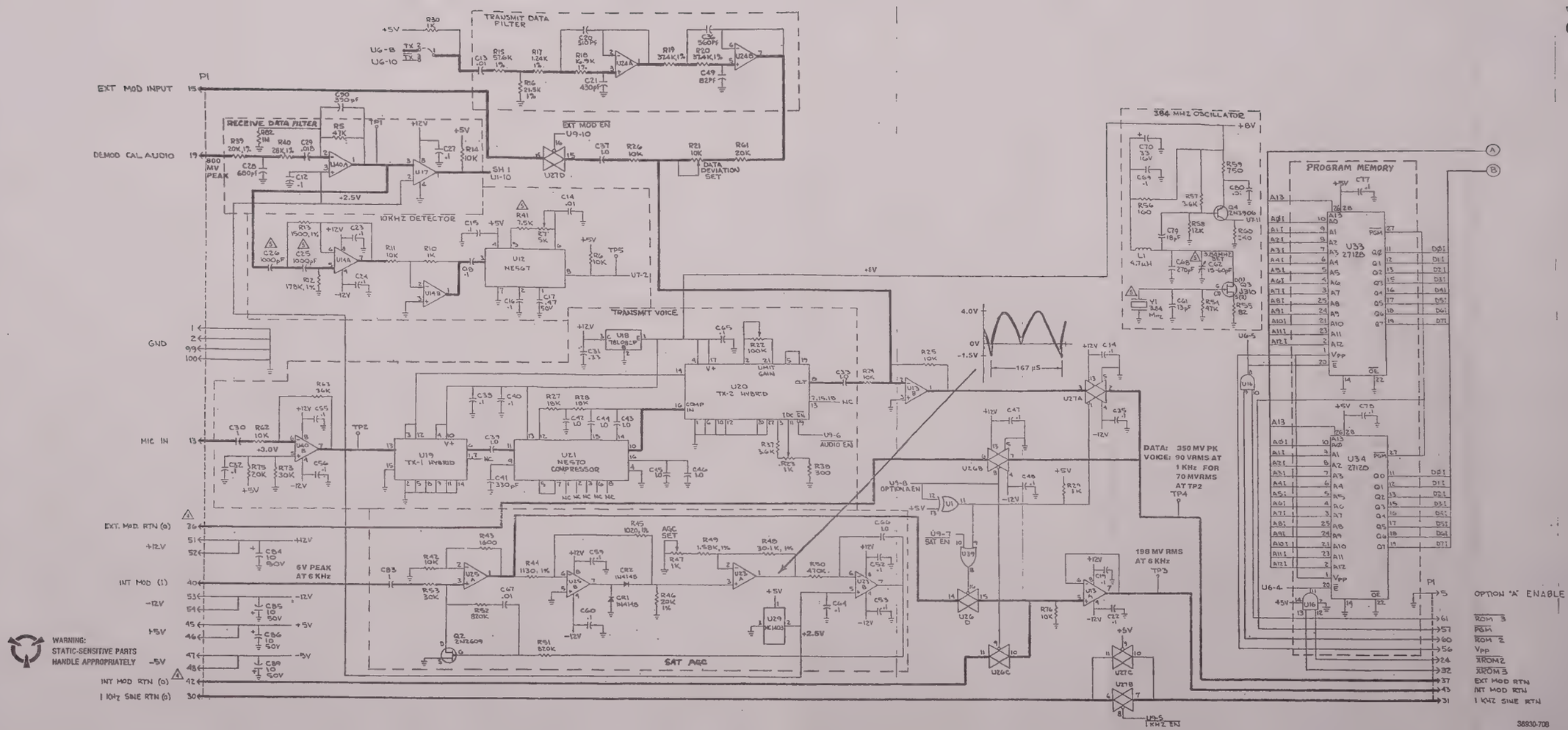

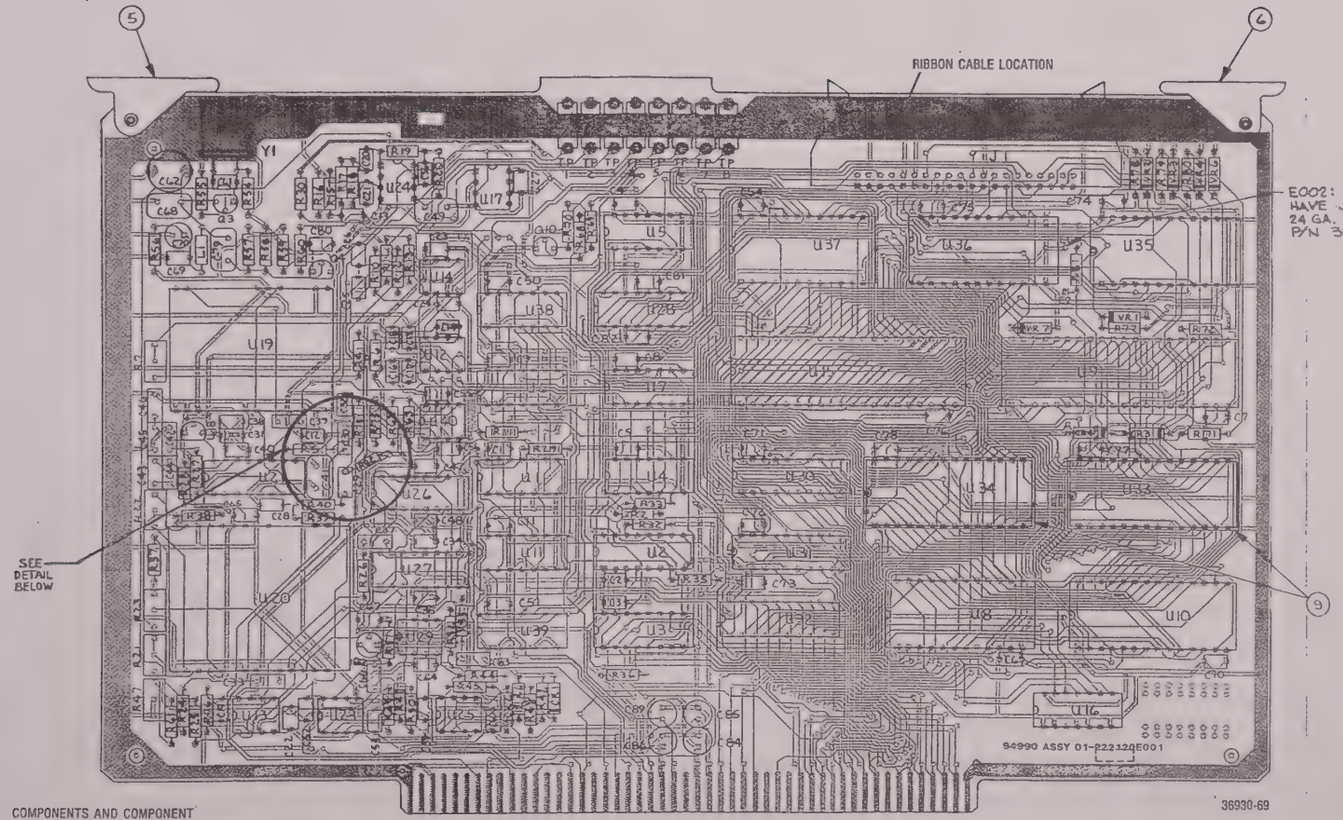


## CELLULAR-TELEPHONE TEST BOARD (A12)
## OPTION A
RTC-1012A

| Find No. | Qty. Req. | Part No. | Nomenclature | Part Value |
|---|---|---|---|---|
| 005 | 1 | 45-80339B28 | CARD EJECTOR | |
| 006 | 1 | 45-80339B31 | CARD EJECTOR | MARKED |
| 009 | 2 | 09-80343B85 | SOCKET | 28 PIN |
| C 001 | 1 | 21-80342B10 | CAPACITOR | .1UF-20-50 |
| C 002 | 1 | 21-80342B10 | CAPACITOR | .1UF-20-50 |
| C 003 | 1 | 21-80342B10 | CAPACITOR | .1UF-20-50 |
| C 004 | 1 | 21-80342B10 | CAPACITOR | .1UF-20-50 |
| C 005 | 1 | 21-80342B10 | CAPACITOR | .1UF-20-50 |
| C 006 | 1 | 21-80342B10 | CAPACITOR | .1UF-20-50 |
| C 007 | 1 | 21-80342B10 | CAPACITOR | .1UF-20-50 |
| C 008 | 1 | 21-80342B10 | CAPACITOR | .1UF-20-50 |
| C 009 | 1 | 21-80342B10 | CAPACITOR | .1UF-20-50 |
| C 010 | 1 | 21-80342B10 | CAPACITOR | .1UF-20-50 |
| C 011 | 1 | 21-80342B10 | CAPACITOR | .1UF-20-50 |
| C 012 | 1 | 21-80342B10 | CAPACITOR | .1UF-20-50 |
| C 013 | 1 | 21-80342B09 | CAPACITOR | .01UF-20-50 |
| C 014 | 1 | 21-80342B09 | CAPACITOR | .01UF-20-50 |
| C 015 | 1 | 21-80342B10 | CAPACITOR | .1UF-20-50 |
| C 016 | 1 | 21-80342B10 | CAPACITOR | .1UF-20-50 |
| C 017 | 1 | 21-80342B14 | CAPACITOR | .47UF-20-50 |
| C 018 | 1 | 21-80342B10 | CAPACITOR | .1UF-20-50 |
| C 019 | 1 | 21-80342B10 | CAPACITOR | .1UF-20-50 |
| C 020 | 1 | 21-80341B75 | CAPACITOR | 510PF-5-50 |
| C 021 | 1 | 21-80341B80 | CAPACITOR | 430PF-5-50 |
| C 022 | 1 | 21-80342B10 | CAPACITOR | .1UF-20-50 |
| C 023 | 1 | 21-80342B10 | CAPACITOR | .1UF-20-50 |
| C 024 | 1 | 21-80342B10 | CAPACITOR | .1UF-20-50 |
| C 025 | 1 | 21-80341B46 | CAPACITOR | 1000PF-5-50 |
| C 026 | 1 | 21-80341B46 | CAPACITOR | 1000PF-5-50 |
| C 027 | 1 | 21-80342B10 | CAPACITOR | .1UF-20-50 |
| C 028 | 1 | 21-80341B77 | CAPACITOR | 680PF-5-50 |
| C 029 | 1 | 21-80342B35 | CAPACITOR | .018UF-5-50 |
| C 030 | 1 | 21-80342B46 | CAPACITOR | 1UF-20-50 |
| C 031 | 1 | 21-80342B12 | CAPACITOR | .33UF-20-50 |
| C 032 | 1 | 21-80342B10 | CAPACITOR | .1UF-20-50 |
| C 033 | 1 | 21-80342B46 | CAPACITOR | 1UF-20-50 |
| C 034 | 1 | 21-80342B10 | CAPACITOR | .1UF-20-50 |
| C 035 | 1 | 21-80342B10 | CAPACITOR | .1UF-20-50 |
| C 036 | 1 | 21-80341B76 | CAPACITOR | 560PF-5-50 |
| C 037 | 1 | 21-80342B46 | CAPACITOR | 1UF-20-50 |
| C 038 | 1 | 21-80342B10 | CAPACITOR | .1UF-20-50 |
| C 039 | 1 | 21-80342B46 | CAPACITOR | 1UF-20-50 |
| C 040 | 1 | 21-80342B10 | CAPACITOR | .1UF-20-50 |
| C 041 | 1 | 21-80339B19 | CAPACITOR | 330PF-5-100 |
| C 042 | 1 | 21-80342B46 | CAPACITOR | 1UF-20-50 |
| C 043 | 1 | 21-80342B46 | CAPACITOR | 1UF-20-50 |
| C 044 | 1 | 21-80342B46 | CAPACITOR | 1UF-20-50 |
| C 045 | 1 | 21-80342B46 | CAPACITOR | 1UF-20-50 |
| C 046 | 1 | 21-80342B46 | CAPACITOR | 1UF-20-50 |
| C 047 | 1 | 21-80342B10 | CAPACITOR | .1UF-20-50 |
| C 048 | 1 | 21-80342B10 | CAPACITOR | .1UF-20-50 |
| C 049 | 1 | 21-80339B18 | CAPACITOR | 82PF-5-500 |
| C 050 | 1 | 21-80342B10 | CAPACITOR | .1UF-20-50 |
| C 051 | 1 | 21-80342B10 | CAPACITOR | .1UF-20-50 |
| C 052 | 1 | 21-80342B10 | CAPACITOR | .1UF-20-50 |
| C 053 | 1 | 21-80342B10 | CAPACITOR | .1UF-20-50 |
| C 054 | 1 | 21-80342B10 | CAPACITOR | .1UF-20-50 |
| C 055 | 1 | 21-80342B10 | CAPACITOR | .1UF-20-50 |
| C 056 | 1 | 21-80342B10 | CAPACITOR | .1UF-20-50 |
| C 059 | 1 | 21-80342B10 | CAPACITOR | .1UF-20-50 |
| C 060 | 1 | 21-80342B10 | CAPACITOR | .1UF-20-50 |
| C 061 | 1 | 21-80341B51 | CAPACITOR | 13PF-5-50 |
| C 062 | 1 | 21-80339B43 | CAPACITOR | 15 TO 60PF-200 |
| C 064 | 1 | 21-80342B10 | CAPACITOR | .1UF-20-50 |
| C 065 | 1 | 21-80342B10 | CAPACITOR | .1UF-20-50 |
| C 066 | 1 | 21-80342B46 | CAPACITOR | 1UF-20-50 |
| C 067 | 1 | 21-80342B09 | CAPACITOR | .01UF-20-50 |
| C 068 | 1 | 21-80339B22 | CAPACITOR | 270PF-5-300 |
| C 069 | 1 | 21-80342B10 | CAPACITOR | .1UF-20-50 |
| C 070 | 1 | 23-84665F24 | CAPACITOR | 33UF-20-16 |
| C 071 | 1 | 21-80342B10 | CAPACITOR | .1UF-20-50 |
| C 072 | 1 | 21-80342B10 | CAPACITOR | .1UF-20-50 |
| C 073 | 1 | 21-80342B10 | CAPACITOR | .1UF-20-50 |
| C 074 | 1 | 21-80342B10 | CAPACITOR | .1UF-20-50 |
| C 075 | 1 | 21-80342B10 | CAPACITOR | .1UF-20-50 |
| C 076 | 1 | 21-80342B10 | CAPACITOR | .1UF-20-50 |
| C 077 | 1 | 21-80342B10 | CAPACITOR | .1UF-20-50 |
| C 078 | 1 | 21-80342B10 | CAPACITOR | .1UF-20-50 |
| C 079 | 1 | 21-80339B13 | CAPACITOR | 18PF-5-500 |
| C 080 | 1 | 21-80342B09 | CAPACITOR | .01UF-20-50 |
| C 081 | 1 | 21-80342B10 | CAPACITOR | .1UF-20-50 |

## CELLULAR-TELEPHONE TEST OPTION

(RTC-1012A)

*Figure 20-3. Printed Wiring Board Assembly and Parts List*

## CELLULAR-TELEPHONE TEST OPTION

RTC-1012A

| Find No. | Qty. Req. | Part No. | Nomenclature | Part Value |
|---|---|---|---|---|
| C 082 | 1 | 21-80342B10 | CAPACITOR | .1UF-20-50 |
| C 083 | 1 | 21-80342B46 | CAPACITOR | 1UF-20-50 |
| C 084 | 1 | 23-80341B15 | CAPACITOR | 10UF-20-50 |
| C 085 | 1 | 23-80341B15 | CAPACITOR | 10UF-20-50 |
| C 086 | 1 | 23-80341B15 | CAPACITOR | 10UF-20-50 |
| C 089 | 1 | 23-80341B15 | CAPACITOR | 10UF-20-50 |
| C 090 | 1 | 21-80339B21 | CAPACITOR | 390PF-5-100 |
| CR001 | 1 | 48-84463K02 | DIODE | |
| CR002 | 1 | 48-84463K02 | DIODE | |
| CR003 | 1 | 48-84463K02 | DIODE | |
| CR004 | 1 | 48-84463K02 | DIODE | |
| J 001 | 1 | 28-80343B53 | CONNECTOR | 40 PIN HEADER |
| L 001 | 1 | 24-80340B55 | COIL | 4.7UH |
| Q 002 | 1 | 48-80342B47 | TRANSISTOR | |
| Q 003 | 1 | 48-00869878 | TRANSISTOR | |
| Q 004 | 1 | RG-2N3906 | TRANSISTOR | |
| Q 010 | 1 | RG-2N3906 | TRANSISTOR | |
| R 001 | 1 | 06-11009C73 | RESISTOR | 10K-5-1/4 |
| R 002 | 1 | 06-11009C73 | RESISTOR | 10K-5-1/4 |
| R 005 | 1 | 06-11009C69 | RESISTOR | 47K-5-1/4 |
| R 006 | 1 | 06-11009C73 | RESISTOR | 10K-5-1/4 |
| R 007 | 1 | 18-83452F11 | RESISTOR,VARIABLE | 5K |
| R 010 | 1 | 06-11009C49 | RESISTOR | 1K-5-1/4 |
| R 011 | 1 | 06-11009C73 | RESISTOR | 10K-5-1/4 |
| R 012 | 1 | 06-10621E13 | RESISTOR | 178K-1-1/4 |
| R 013 | 1 | 06-10621C12 | RESISTOR | 1.5K-1-1/4 |
| R 014 | 1 | 06-11009C73 | RESISTOR | 10K-5-1/4 |
| R 015 | 1 | 06-10621D65 | RESISTOR | 57.6K-1-1/4 |
| R 016 | 1 | 06-10621D24 | RESISTOR | 21.5K-1-1/4 |
| R 017 | 1 | 06-10621C04 | RESISTOR | 1.24K-1-1/4 |
| R 018 | 1 | 06-10621D14 | RESISTOR | 16.9K-1-1/4 |
| R 019 | 1 | 06-10621D47 | RESISTOR | 37.4K-1-1/4 |
| R 020 | 1 | 06-10621D47 | RESISTOR | 37.4K-1-1/4 |
| R 021 | 1 | 18-83452F13 | RESISTOR,VARIABLE | 10K |
| R 022 | 1 | 18-83452F19 | RESISTOR,VARIABLE | 100K |
| R 023 | 1 | 18-83452F09 | RESISTOR,VARIABLE | 1K |
| R 024 | 1 | 06-11009C73 | RESISTOR | 10K-5-1/4 |
| R 025 | 1 | 06-11009C73 | RESISTOR | 10K-5-1/4 |
| R 026 | 1 | 06-11009C73 | RESISTOR | 10K-5-1/4 |
| R 027 | 1 | 06-11009C79 | RESISTOR | 18K-5-1/4 |
| R 028 | 1 | 06-11009C79 | RESISTOR | 18K-5-1/4 |
| R 029 | 1 | 06-11009C49 | RESISTOR | 1K-5-1/4 |
| R 030 | 1 | 06-11009C49 | RESISTOR | 1K-5-1/4 |
| R 032 | 1 | 06-11009C73 | RESISTOR | 10K-5-1/4 |
| R 033 | 1 | 06-11009C73 | RESISTOR | 10K-5-1/4 |
| R 035 | 1 | 06-11009C73 | RESISTOR | 10K-5-1/4 |
| R 036 | 1 | 06-11009C49 | RESISTOR | 1K-5-1/4 |
| R 037 | 1 | 06-11009C62 | RESISTOR | 3.6K-5-1/4 |
| R 038 | 1 | 06-11009C36 | RESISTOR | 300-5-1/4 |
| R 039 | 1 | 06-10621D21 | RESISTOR | 20K-1-1/4 |
| R 040 | 1 | 06-10621D35 | RESISTOR | 28K-1-1/4 |
| R 041 | 1 | 06-11009C70 | RESISTOR | 7.5K-5-1/4 |
| R 042 | 1 | 06-11009C73 | RESISTOR | 10K-5-1/4 |
| R 043 | 1 | 06-11009C54 | RESISTOR | 1.6K-5-1/4 |
| R 044 | 1 | 06-10621B99 | RESISTOR | 1.13K-1-1/4 |
| R 045 | 1 | 06-10621B95 | RESISTOR | 1.02K-1-1/4 |
| R 046 | 1 | 06-10621D21 | RESISTOR | 20K-1-1/4 |
| R 047 | 1 | 18-83452F09 | RESISTOR,VARIABLE | 1K |
| R 048 | 1 | 06-10621D38 | RESISTOR | 30.1K-1-1/4 |
| R 049 | 1 | 06-10621C14 | RESISTOR | 1.58K-1-1/4 |
| R 050 | 1 | 06-11009D14 | RESISTOR | 470K-5-1/4 |
| R 051 | 1 | 06-11009D20 | RESISTOR | 820K-5-1/4 |
| R 052 | 1 | 06-11009D20 | RESISTOR | 820K-5-1/4 |
| R 053 | 1 | 06-11009C84 | RESISTOR | 30K-5-1/4 |
| R 054 | 1 | 06-11009C89 | RESISTOR | 47K-5-1/4 |
| R 055 | 1 | 06-11009C23 | RESISTOR | 82-5-1/4 |
| R 056 | 1 | 06-11009C30 | RESISTOR | 160-5-1/4 |
| R 057 | 1 | 06-11009C62 | RESISTOR | 3.6K-5-1/4 |
| R 058 | 1 | 06-11009C75 | RESISTOR | 12K-5-1/4 |
| R 059 | 1 | 06-11009C46 | RESISTOR | 750-5-1/4 |
| R 060 | 1 | 06-11009C34 | RESISTOR | 240-5-1/4 |
| R 061 | 1 | 06-11009C80 | RESISTOR | 20K-5-1/4 |
| R 062 | 1 | 06-11009C73 | RESISTOR | 10K-5-1/4 |
| R 063 | 1 | 06-11009C86 | RESISTOR | 36K-5-1/4 |
| R 068 | 1 | 06-11009C67 | RESISTOR | 5.6K-5-1/4 |
| R 069 | 1 | 06-11009C77 | RESISTOR | 15K-5-1/4 |
| R 070 | 1 | 06-11009C49 | RESISTOR | 1K-5-1/4 |
| R 071 | 1 | 06-11009C49 | RESISTOR | 1K-5-1/4 |
| R 072 | 1 | 06-11009C97 | RESISTOR | 100K-5-1/4 |
| R 073 | 1 | 06-11009C84 | RESISTOR | 30K-5-1/4 |
| R 075 | 1 | 06-11009C80 | RESISTOR | 20K-5-1/4 |
| R 076 | 1 | 06-11009C73 | RESISTOR | 10K-5-1/4 |
| R 077 | 1 | 06-11009C73 | RESISTOR | 10K-5-1/4 |
| R 078 | 1 | 06-11009C73 | RESISTOR | 10K-5-1/4 |
| R 079 | 1 | 06-11009C73 | RESISTOR | 10K-5-1/4 |
| R 080 | 1 | 06-11009C73 | RESISTOR | 10K-5-1/4 |
| R 081 | 1 | 06-11009C73 | RESISTOR | 10K-5-1/4 |
| R 082 | 1 | 06-11009D22 | RESISTOR | 1M-5-1/4 |
| TP001 | 1 | 09-80331A88 | JACK | WHITE |
| TP002 | 1 | 09-80331A88 | JACK | WHITE |
| TP003 | 1 | 09-80331A88 | JACK | WHITE |
| TP004 | 1 | 09-80331A88 | JACK | WHITE |
| TP005 | 1 | 09-80331A88 | JACK | WHITE |
| TP006 | 1 | 09-80331A88 | JACK | WHITE |
| TP007 | 1 | 09-80331A88 | JACK | WHITE |
| TP008 | 1 | 09-80331A88 | JACK | WHITE |
| U 001 | 1 | 51-82609M79 | INTEGRATED CIRCUIT | |
| U 002 | 1 | 51-82834L02 | INTEGRATED CIRCUIT | |
| U 003 | 1 | 51-82609M28 | INTEGRATED CIRCUIT | SC76870 |
| U 004 | 1 | 51-05596E46 | INTEGRATED CIRCUIT | SCREENED |
| U 005 | 1 | 51-05596E15 | INTEGRATED CIRCUIT | |
| U 006 | 1 | 51-84561L04 | INTEGRATED CIRCUIT | |
| U 007 | 1 | 51-83627M93 | INTEGRATED CIRCUIT | |
| U 008 | 1 | 51-82807K10 | INTEGRATED CIRCUIT | |
| U 009 | 1 | 51-82807K20 | INTEGRATED CIRCUIT | |
| U 010 | 1 | 51-82849M44 | INTEGRATED CIRCUIT | |
| U 011 | 1 | 51-84561L05 | INTEGRATED CIRCUIT | |
| U 012 | 1 | 51-82609M34 | INTEGRATED CIRCUIT | |
| U 013 | 1 | 51-80345A04 | INTEGRATED CIRCUIT | CA3240E SCREENED |
| U 014 | 1 | 51-80345A04 | INTEGRATED CIRCUIT | CA3240E SCREENED |
| U 015 | 1 | 51-82807K20 | INTEGRATED CIRCUIT | |
| U 016 | 1 | 51-84561L07 | INTEGRATED CIRCUIT | SCREENED |
| U 017 | 1 | 51-80345A10 | INTEGRATED CIRCUIT | LM393N SCREENED |
| U 018 | 1 | 51-05683H01 | INTEGRATED CIRCUIT | |
| U 019 | 1 | 51-80341B35 | INTEGRATED CIRCUIT | |
| U 020 | 1 | 51-80341B36 | INTEGRATED CIRCUIT | |
| U 021 | 1 | 51-80340B71 | INTEGRATED CIRCUIT | |
| U 023 | 1 | 51-80345A04 | INTEGRATED CIRCUIT | CA3240E SCREENED |
| U 024 | 1 | 51-80345A04 | INTEGRATED CIRCUIT | CA3240E SCREENED |
| U 025 | 1 | 51-80345A04 | INTEGRATED CIRCUIT | CA3240E SCREENED |
| U 026 | 1 | 51-80345A05 | INTEGRATED CIRCUIT | HI-201-5 SCREENED |
| U 027 | 1 | 51-80345A05 | INTEGRATED CIRCUIT | HI-201-5 SCREENED |
| U 028 | 1 | 51-80396A13 | INTEGRATED CIRCUIT | DG508CJ SCREENED |
| U 029 | 1 | 51-05469E13 | INTEGRATED CIRCUIT | |
| U 030 | 1 | 51-82609M56 | INTEGRATED CIRCUIT | |
| U 031 | 1 | 51-82609M56 | INTEGRATED CIRCUIT | |
| U 032 | 1 | 51-82609M57 | INTEGRATED CIRCUIT | |
| U 033 | 1 | 51-80339B89 | INTEGRATED CIRCUIT | EPROM |
| U 034 | 1 | 51-80339B89 | INTEGRATED CIRCUIT | EPROM |
| U 035 | 1 | 51-80343B38 | INTEGRATED CIRCUIT | MC3447 |
| U 036 | 1 | 51-80343B38 | INTEGRATED CIRCUIT | MC3447 |
| U 037 | 1 | 51-80340B03 | INTEGRATED CIRCUIT | RAM |
| U 038 | 1 | 51-84561L38 | INTEGRATED CIRCUIT | |
| U 039 | 1 | 51-84561L36 | INTEGRATED CIRCUIT | |
| U 040 | 1 | 51-80345A04 | INTEGRATED CIRCUIT | CA3240E SCREENED |
| VR001 | 1 | 48-80342B16 | DIODE,ZENER | 6.2V |
| VR002 | 1 | 48-80342B16 | DIODE,ZENER | 6.2V |
| VR003 | 1 | 48-80342B16 | DIODE,ZENER | 6.2V |
| VR004 | 1 | 48-80342B16 | DIODE,ZENER | 6.2V |
| VR005 | 1 | 48-80342B16 | DIODE,ZENER | 6.2V |
| VR006 | 1 | 48-80342B16 | DIODE,ZENER | 6.2V |
| VR007 | 1 | 48-80342B16 | DIODE,ZENER | 6.2V |
| Y 001 | 1 | 48-80343B31 | CRYSTAL | |

### Cellular Interface Kit

| Find No. | Qty. Req. | Part No. | Nomenclature | Part Value |
|---|---|---|---|---|
| 001 | 1 | RTC-1012A | OPTION'A' BD ASSY(A12) | |
| 002 | 1 | 30-80344B13 | CABLE ASSEMBLY, RIBBON | OPTION A/BACK PANEL |
| 003 | 2 | 55-80339B88 | LATCH | |

### Cellular Connector Kit

| Find No. | Qty. Req. | Part No. | Nomenclature | Part Value |
|---|---|---|---|---|
| 001 | 1 | RTC-4048A | PRINTED WIRING BOARD ASSY | JUMPER CARD |

### Jumper Card (Option A)
RTC-4048A

| Find No. | Qty. Req. | Part No. | Nomenclature | Part Value |
|---|---|---|---|---|
| 004 | 1 | 45-80339B28 | CARD EJECTOR | |
| 005 | 1 | 45-80339B32 | CARD EJECTOR | MARKED |
| 006 | 4 | 30-80344B18 | JUMPER,WIRE | |

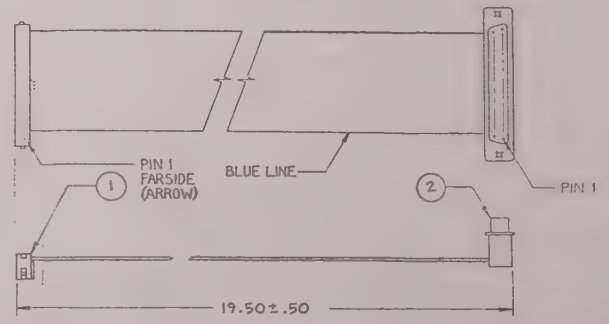


36930-136

### Cable Assembly, Ribbon
30-80344B13

| Find No. | Qty. Req. | Part No. | Nomenclature | Part Value |
|---|---|---|---|---|
| 001 | 1 | 09-80343B54 | CLOSED END SOCKET | 40 PIN |
| 002 | 1 | 09-80339B74 | CONNECTOR, FEMALE | 37 PIN |

# SECTION 21.
# IEEE INTERFACE OPTION
# REMOTE INTERFACE OPTION

## PART 1. IEEE INTERFACE

### 21.1 DESCRIPTION

An IEEE-488 bus and the IEEE Interface board provide remote control of the system. The IEEE Interface board provides the interface for the 488 bus, thus allowing processor-control of most of the functions normally controlled from the front panel. The IEEE Interface board also contains a multipurpose input/output (I/O) port, which can be used to control equipment, to output data, or to monitor data.

A block diagram of the IEEE Interface board is shown at the end of the section in Figure 21-1, a schematic in Figure 21-2, and the printed wiring board assembly and parts list in Figure 21-3. Figure 21-4 shows the assembly and parts list of the A17 RF Input module's IEEE option.

### 21.2 THEORY OF OPERATION

#### 21.2.1 IEEE BUS INTERFACE

The IEEE bus interface circuit provides for bus buffering and interface protocol as defined by the IEEE-488 specification. The system processor accesses the interface directly through its address, data, and control busses, which are used for reading from or writing to the IEEE bus.

The address of the System Analyzer's IEEE bus is set on the IEEE Interface board via the top four switches on a dip switch. The least significant bit is the top switch. Using the binary equivalent of the address number, the operator can set the address. Setting the switches to ON gives a logic 1.

#### 21.2.2 RF-LEVEL CONTROL

The circuitry for RF-level control selects either the 5 VDC + AM MOD input for remote control or the AM MOD + DC REF (I) input for local control. For remote control, the 5 VDC + AM MOD input is electronically attenuated to provide the requested RF output level. For local control, the attenuator is programmed for unity gain so that the AM MOD + DC REF (I) signal from the front panel's RF-level potentiometer controls the RF output level.

For the IEEE control option, an electronically programmable RF step attenuator is installed in the system. The processor then controls the attenuator through the address-decode and control-latch circuitry on the IEEE Interface board.

#### 21.2.3 MODULATION CONTROL

The IEEE Interface board can individually control each of the three modulation sources. For remote control, the respective modulation input — INT MOD (I), EXT MOD (I), and 1 KHz SINE (I) — is switched to a programmable attenuator. The system processor selects the level of attenuation necessary to provide the requested level of modulation. For local control, the attenuators are programmed for unity gain, and the respective modulation signal from the front panel's level control — INT MOD RTN (I), EXT MOD RTN (I) and 1 KHz SINE RTN (I) — is selected and sent to the attenuator to control the modulation level.

#### 21.2.4 ADDRESS-DECODE AND CONTROL-LATCH CIRCUITRY

With the address-decode and control-latch circuitry, the system processor has direct control over the programmable attenuators on the board. Control data on the data bus (D0-D7) is latched at the control latch indicated by the address bus (A0-A15).

#### 21.2.5 MULTIPURPOSE INPUT/OUTPUT AND RELAY PORTS

A side-panel connector provides 16 multipurpose input/output (I/O) ports and two pairs of relay ports. The I/O ports can be configured as either inputs or outputs. Data is written to or read from these ports via the IEEE bus. All these ports meet TTL logic-level requirements for positive logic. As inputs, I/O 1 to I/O 8 represent no more than two standard TTL loads each, while I/O 9 to I/O 16 are high-impedance loads. As outputs, each port can drive up to two standard TTL loads. I/O 9 to I/O 16 can also supply a minimum of 1 mA at 1.5V.

Two pairs of ports are connected to relays in such a way that the two ports of each set are normally unconnected. However, when the relay is activated, the ports are shorted together. Each relay port can switch a maximum of 28 Vdc at 0.8A. Each relay port is also isolated from the system chassis to a voltage level of 500 Vdc.

## PART 2. REMOTE INTERFACE

### 21.3 DESCRIPTION

The IEEE-488 bus and RS-232 bus on the Remote Interface board provide remote control of the system. The Remote Interface board provides the interface for the IEEE-488 and RS-232 buses, thus allowing processor control of most of the functions normally controlled from the front panel. The Remote Interface board also contains a multipurpose input/output (I/O) port, which can be used to control equipment, to output data, or to monitor data.

A block diagram of the Remote Interface board is shown at the end of the section in Figure 21-1, a schematic in Figure 21-5, and the printed wiring board assembly and parts list in Figure 21-6. Figure 21-4 shows the assembly and parts list of the A17 RF Input module's remote option.

### 21.4 THEORY OF OPERATION

#### 21.4.1 IEEE BUS INTERFACE

The IEEE bus interface circuit provides for bus buffering and interface protocol as defined by the IEEE-488 specification. The system processor accesses the interface directly through its address, data, and control buses, which are used for reading from or writing to the IEEE bus.

The address of the system analyzer's IEEE bus is set on the IEEE Interface board via the top four switches on a dip switch. The top switch sets the least significant bit. Using the binary equivalent of the address number, the operator can set the address. Setting the switches to ON gives a logic 1.

#### 21.4.2 RS-232 BUS INTERFACE

The RS-232 bus interface circuit provides for bus buffering of the interface protocol as defined by the RS-232 specification. The system processor also accesses this interface directly through its address, data, and control lines.

The programmer must configure the RS-232 communication parameters of the analyzer to match the particular controller that is being used. This can be accomplished by using special function 95. Once the RS-232 port parameters are correctly set, the programmer need only connect the controller to the analyzer using one of the setups described in the user's manual.

#### 21.4.3 RF-LEVEL CONTROL

The circuitry for RF-level control selects either the 5 VDC + AM MOD input for remote control, or the AM MOD + DC REF (I) input for local control. For remote control, the 5 VDC + AM MOD input is electronically attenuated to provide the requested RF output level. For local control, the attenuator is programmed for unity gain so that the AM MOD + DC REF (I) signal from the front panel's RF-LEVEL potentiometer controls the RF output level.

For the remote control option, an electronically programmable RF step attenuator is installed in the system. The processor controls the attenuator through the address decode and control latch circuitry on the Remote Interface board.

#### 21.4.4 MODULATION CONTROL

The Remote Interface board can individually control each of the three modulation sources. For remote control, the respective modulation input — INT MOD (I), EXT MOD (I), and 1 kHz SINE (I) — is switched to a programmable attenuator. The system processor selects the level of attenuation necessary to provide the requested level of modulation. For local control, the attenuators are programmed for unity gain, and the respective modulation signal from the front panel's level control — INT MOD RTN (I), EXT MOD RTN (I), and 1 kHz SINE RTN (I) — is selected and sent to the attenuator to control the modulation level.

#### 21.4.5 ADDRESS-DECODE AND CONTROL-LATCH CIRCUITRY

With the address decode and control latch circuitry, the system processor has direct control over the programmable attenuators on the board. Control data on the data bus (DO-D7) is latched at the control latch indicated by the address bus (A0-A15).

#### 21.4.6 MULTIPURPOSE INPUT/OUTPUT AND RELAY PORTS

A side-panel connector provides 16 multipurpose input/output (I/O) ports and two pairs of relay ports. The I/O ports can be configured as either inputs or outputs. Data is written to or read from these ports via the remote bus. All these ports meet TTL logic level requirements for positive logic. As inputs, I/O 1 to I/O 8 represent no more than two standard TTL loads each, while I/O 9 to I/O 16 are high impedance loads. As outputs, each port can drive as many as two standard TTL loads. I/O 0 to I/O 16 can also supply a minimum of 1 mA at 1.5 Vdc.

Two pairs of ports are connected to relays in such a way that the two ports of each set are normally unconnected. However, when the relay is activated, the ports are shorted together. Each relay port can switch a maximum of 28 Vdc at 0.8 A. Each relay port is also isolated from the system chassis to a voltage level of 500 Vdc.

*Figure 21-1. Block Diagram*

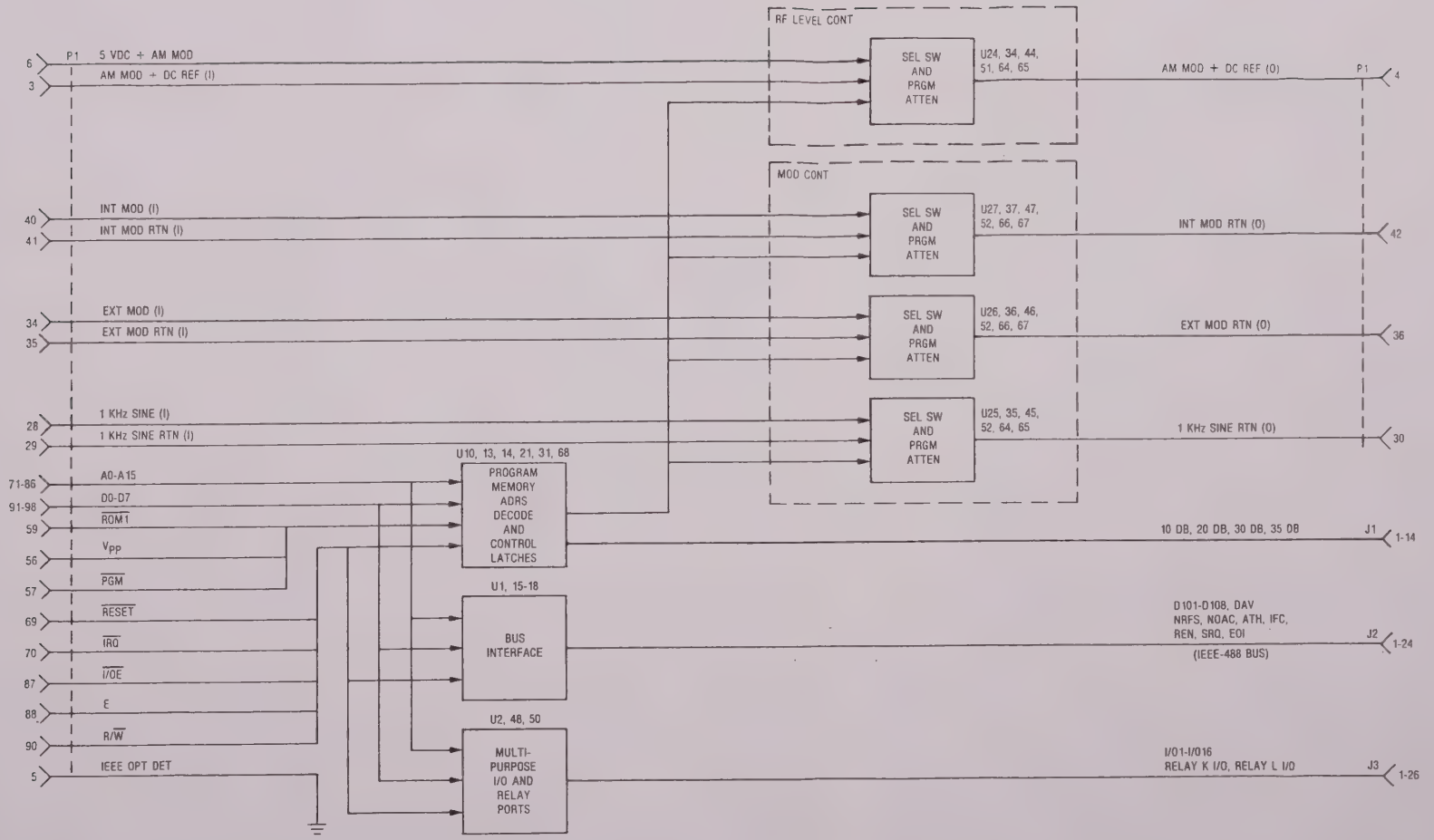

*Figure 21-2a. Schematic (Sheet 1 of 2)*

NOTES:

1. UNLESS OTHERWISE SPECIFIED
   ALL RESISTORS ARE IN OHMS ±5 PCT, 1/4 WATT(S)
   ALL CAPACITORS ARE IN UF
   ALL INDUCTORS ARE IN MH
   ALL VOLTAGES ARE IN DC
2. PARTIAL REFERENCE DESIGNATIONS ARE SHOWN. FOR COMPLETE DESIGNATION PREFIX WITH 1A13
3. FOR REFERENCE DRAWINGS REFER TO
   ASSY: 01-P22130E001
   PL01-P22130E001

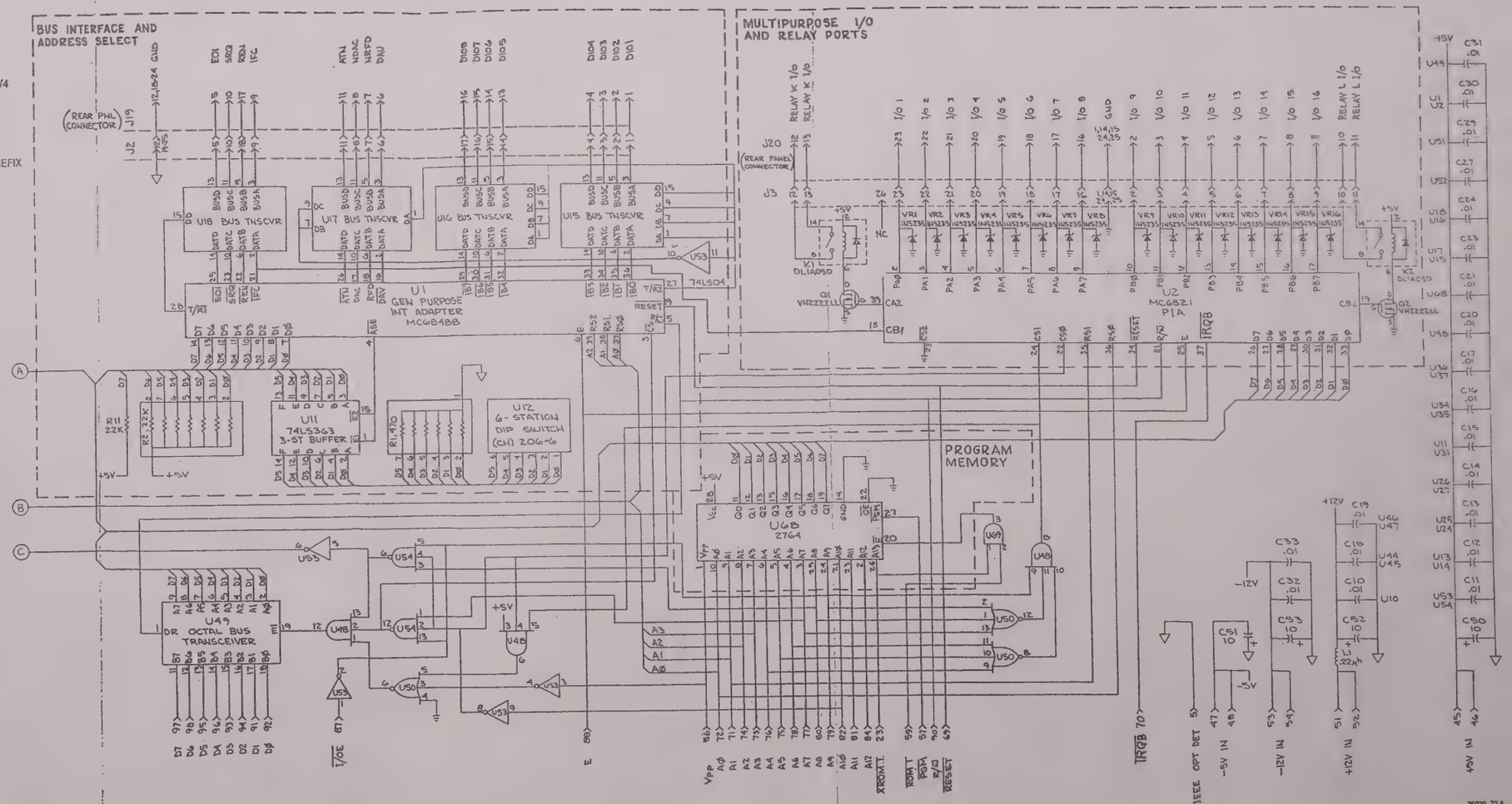

| REF DES | TYPE | GND | +5V | -5V | +12V | -12V | +33V | NO CONN |
|---|---|---|---|---|---|---|---|---|
| U1 | MC6848B | 1,2,40 | 20 | | | | | 13, 24 |
| U2 | MC6821 | 1, 23 | 20 | | | | | 38,40 |
| U10 | UDN6116A | 1,8 | | | 9 | | | 15,16,2 |
| U11 | 74LS365 | 8 | 16 | | | | | |
| U12 | 7406-6 | | 7 THRU 12 | | | | | |
| U13 | 74LS138 | 8 | 6,16 | | | | | 7, 9-13 |
| U14 | 74LS138 | 3,8 | 16 | | | | | |
| U15 | MC3448 | 4,8,12 | 16 | | | | | |
| U16 | MC3448 | 4,8,12 | 16 | | | | | |
| U17 | MC3448 | 4,8,12,15 | 16 | | | | | |
| U18 | MC3448 | 1,4,7,8,12 | 9,16 | | | | | |
| U21 | MC14174 | 8 | 1,16 | | | | | 12,15 |
| U24 | MC14174 | 8 | 1,16 | | | | | |
| U25 | MC14174 | 8 | 1,16 | | | | | |
| U26 | MC14174 | 8 | 1,16 | | | | | |
| U27 | MC14174 | 8 | 1,16 | | | | | |
| U31 | MC14174 | 8 | 1,16 | | | | | 2,5,7,10,12 |
| U34 | MC14174 | 8 | 1,16 | | | | | |
| U35 | MC14174 | 8 | 1,16 | | | | | |
| U36 | MC14174 | 8 | 1,16 | | | | | |
| U37 | MC14174 | 8 | 1,16 | | | | | |
| U44 | AD7531 | 2,3 | | | 16 | | | |
| U45 | AD7531 | 2,3 | | | 16 | | | |
| U46 | AD7531 | 2,3 | | | 16 | | | |
| U47 | AD7531 | 2,3 | | | 16 | | | |
| U48 | 74LS11 | 7 | 3,14 | | | | | |
| U49 | 74LS245 | 10 | 20 | | | | | |
| U50 | 74LS27 | 4,7 | 14 | | | | | |
| U51 | MC14053 | 6,8 | 16 | 7 | | | | 1-5,13 |
| U52 | MC14053 | 6,8 | 16 | 7 | | | | |
| U53 | 74LS04 | 7 | 13,19 | | | | | 12 |
| U54 | 74LS10 | 7 | 14,10 | | | | | |
| U64 | CA3240 | | | | 8 | 4 | | |
| U65 | CA3240 | | | | 8 | 4 | | |
| U66 | CA3240 | | | | 8 | 4 | | |
| U67 | CA3240 | | | | 8 | 4 | | |
| U68 | MC68764L | 14,22 | 28 | | | | | |
| U69 | SN74LS08J | 7 | 14 | | | | | 4-6, 8-13 |

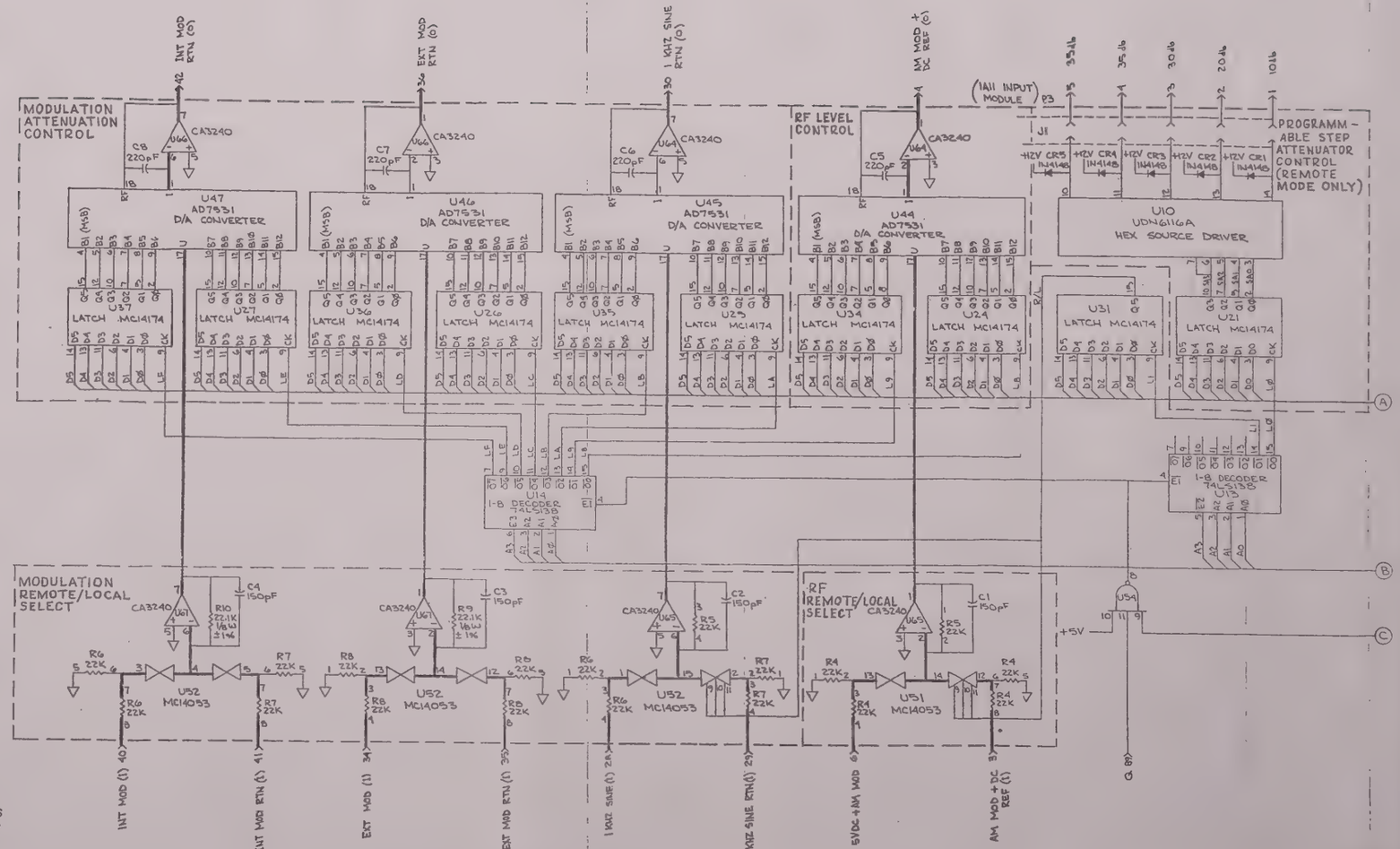


36930-73 B

WARNING:
STATIC-SENSITIVE PARTS
HANDLE APPROPRIATELY

*Figure 21-2b. Schematic (Sheet 2 of 2)*

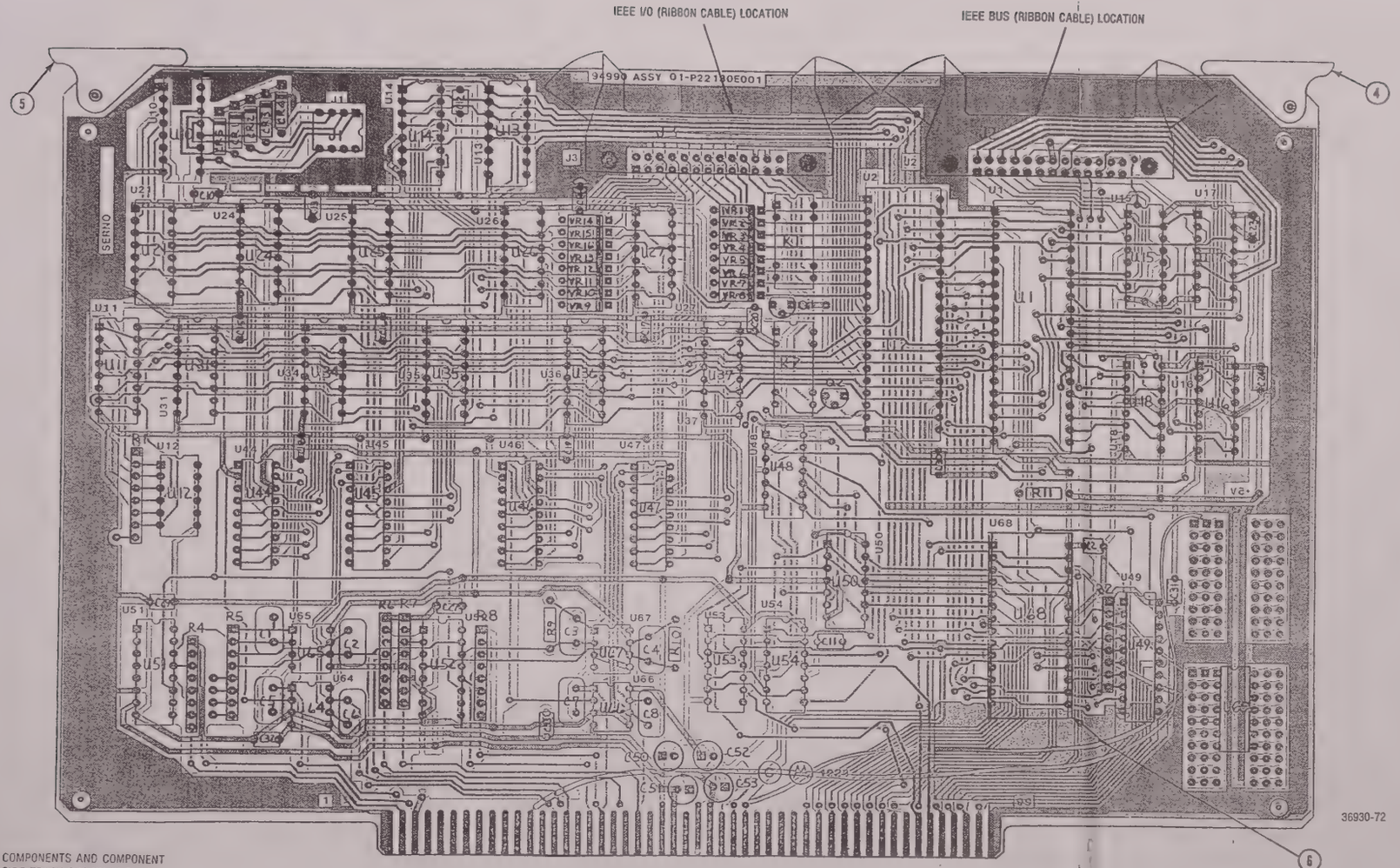


COMPONENTS AND COMPONENT SIDE TRACK SHOWN IN BLACK.
SOLDER-SIDE TRACK SHOWN IN ORANGE

IEEE INTERFACE OPTION

| Find No. | Qty. Req. | Part No. | Nomenclature | Part Value |
|---|---|---|---|---|
| 004 | 1 | 45-80339B28 | CARD EJECTOR | |
| 005 | 1 | 45-80339B32 | CARD EJECTOR | MARKED |
| 006 | 1 | 09-80339B51 | SOCKET | 28 PIN |
| C 001 | 1 | 21-80369A94 | CAPACITOR | 150PF-5-500 |
| C 002 | 1 | 21-80369A94 | CAPACITOR | 150PF-5-500 |
| C 003 | 1 | 21-80369A94 | CAPACITOR | 150PF-5-500 |
| C 004 | 1 | 21-80369A94 | CAPACITOR | 150PF-5-500 |
| C 005 | 1 | 21-80339B26 | CAPACITOR | 220PF-5-500 |
| C 006 | 1 | 21-80339B26 | CAPACITOR | 220PF-5-500 |
| C 007 | 1 | 21-80339B26 | CAPACITOR | 220PF-5-500 |
| C 008 | 1 | 21-80339B26 | CAPACITOR | 220PF-5-500 |
| C 010 | 1 | 21-80342B09 | CAPACITOR | .01UF-20-50 |
| C 011 | 1 | 21-80342B09 | CAPACITOR | .01UF-20-50 |
| C 012 | 1 | 21-80342B09 | CAPACITOR | .01UF-20-50 |
| C 013 | 1 | 21-80342B09 | CAPACITOR | .01UF-20-50 |
| C 014 | 1 | 21-80342B09 | CAPACITOR | .01UF-20-50 |
| C 015 | 1 | 21-80342B09 | CAPACITOR | .01UF-20-50 |
| C 016 | 1 | 21-80342B09 | CAPACITOR | .01UF-20-50 |
| C 017 | 1 | 21-80342B09 | CAPACITOR | .01UF-20-50 |
| C 018 | 1 | 21-80342B09 | CAPACITOR | .01UF-20-50 |
| C 019 | 1 | 21-80342B09 | CAPACITOR | .01UF-20-50 |
| C 020 | 1 | 21-80342B09 | CAPACITOR | .01UF-20-50 |
| C 021 | 1 | 21-80342B09 | CAPACITOR | .01UF-20-50 |
| C 023 | 1 | 21-80342B09 | CAPACITOR | .01UF-20-50 |
| C 024 | 1 | 21-80342B09 | CAPACITOR | .01UF-20-50 |
| C 027 | 1 | 21-80342B09 | CAPACITOR | .01UF-20-50 |
| C 029 | 1 | 21-80342B09 | CAPACITOR | .01UF-20-50 |
| C 030 | 1 | 21-80342B09 | CAPACITOR | .01UF-20-50 |
| C 031 | 1 | 21-80342B09 | CAPACITOR | .01UF-20-50 |
| C 032 | 1 | 21-80342B09 | CAPACITOR | .01UF-20-50 |
| C 033 | 1 | 21-80342B09 | CAPACITOR | .01UF-20-50 |
| C 050 | 1 | 23-80341B15 | CAPACITOR | 10UF-20-50 |
| C 051 | 1 | 23-80341B15 | CAPACITOR | 10UF-20-50 |
| C 052 | 1 | 23-80341B15 | CAPACITOR | 10UF-20-50 |
| C 053 | 1 | 23-80341B15 | CAPACITOR | 10UF-20-50 |
| CR001 | 1 | 48-84463K02 | DIODE | |
| CR002 | 1 | 48-84463K02 | DIODE | |
| CR003 | 1 | 48-84463K02 | DIODE | |
| CR004 | 1 | 48-84463K02 | DIODE | |
| CR005 | 1 | 48-84463K02 | DIODE | |
| J 001 | 1 | 09-80331A95 | SOCKET,SOLDER DIP | 8 PIN |
| J 002 | 1 | 28-80343B51 | CONNECTOR | 26 PIN HEADER |
| J 003 | 1 | 28-80343B51 | CONNECTOR | 26 PIN HEADER |
| K 001 | 1 | 80-80339B76 | RELAY,ELECTRONIC | |
| K 002 | 1 | 80-80339B76 | RELAY,ELECTRONIC | |
| L 001 | 1 | 25-80342B79 | COIL,TOROID | |
| Q 001 | 1 | 48-80341B23 | TRANSISTOR | |
| Q 002 | 1 | 48-80341B23 | TRANSISTOR | |
| R 001 | 1 | 51-80343B80 | RESISTOR NETWORK | HEX SIP 470 |
| R 002 | 1 | 06-80340B11 | RESISTOR NETWORK | HEX SIP 22K |
| R 004 | 1 | 51-80368A78 | RESISTOR NETWORK | QUAD SIP 22K |
| R 005 | 1 | 51-80368A78 | RESISTOR NETWORK | QUAD SIP 22K |
| R 006 | 1 | 51-80368A78 | RESISTOR NETWORK | QUAD SIP 22K |
| R 007 | 1 | 51-80368A78 | RESISTOR NETWORK | QUAD SIP 22K |
| R 008 | 1 | 51-80368A78 | RESISTOR NETWORK | QUAD SIP 22K |
| R 009 | 1 | 06-10621D25 | RESISTOR | 22.1K-1-1/4 |
| R 010 | 1 | 06-10621D25 | RESISTOR | 22.1K-1-1/4 |
| R 011 | 1 | 06-11009C81 | RESISTOR | 22K-5-1/4 |
| U 001 | 1 | 51-80340B22 | INTEGRATED CIRCUIT | |
| U 002 | 1 | 51-82807K20 | INTEGRATED CIRCUIT | |
| U 010 | 1 | 51-80345A63 | INTEGRATED CIRCUIT | |
| U 011 | 1 | 51-80340B82 | INTEGRATED CIRCUIT | |
| U 012 | 1 | 40-80369A07 | SWITCH,6 STATION | |
| U 013 | 1 | 51-84561L41 | INTEGRATED CIRCUIT | |
| U 014 | 1 | 51-84561L41 | INTEGRATED CIRCUIT | |
| U 015 | 1 | 51-80340B20 | INTEGRATED CIRCUIT | |
| U 016 | 1 | 51-80340B20 | INTEGRATED CIRCUIT | |
| U 017 | 1 | 51-80340B20 | INTEGRATED CIRCUIT | |
| U 018 | 1 | 51-80340B20 | INTEGRATED CIRCUIT | |
| U 021 | 1 | 51-83627M89 | INTEGRATED CIRCUIT | |
| U 024 | 1 | 51-83627M89 | INTEGRATED CIRCUIT | |
| U 025 | 1 | 51-83627M89 | INTEGRATED CIRCUIT | |
| U 026 | 1 | 51-83627M89 | INTEGRATED CIRCUIT | |
| U 027 | 1 | 51-83627M89 | INTEGRATED CIRCUIT | |
| U 031 | 1 | 51-83627M89 | INTEGRATED CIRCUIT | |
| U 034 | 1 | 51-83627M89 | INTEGRATED CIRCUIT | |
| U 035 | 1 | 51-83627M89 | INTEGRATED CIRCUIT | |
| U 036 | 1 | 51-83627M89 | INTEGRATED CIRCUIT | |
| U 037 | 1 | 51-83627M89 | INTEGRATED CIRCUIT | |
| U 044 | 1 | 51-80345A98 | INTEGRATED CIRCUIT | AD7531JPN SCREENED |
| U 045 | 1 | 51-80345A98 | INTEGRATED CIRCUIT | AD7531JPN SCREENED |

*Figure 21-3. Printed Wiring Board Assembly and Parts List*

## IEEE INTERFACE OPTION (Cont)

| Find No. | Qty. Req. | Part No. | Nomenclature | Part Value |
|---|---|---|---|---|
| U 046 | 1 | 51-80345A98 | INTEGRATED CIRCUIT | AD7531JPN SCREENED |
| U 047 | 1 | 51-80345A98 | INTEGRATED CIRCUIT | AD7531JPN SCREENED |
| U 048 | 1 | 51-84561L44 | INTEGRATED CIRCUIT | |
| U 049 | 1 | 51-82609M57 | INTEGRATED CIRCUIT | |
| U 050 | 1 | 51-84561L38 | INTEGRATED CIRCUIT | |
| U 051 | 1 | 51-05467G01 | INTEGRATED CIRCUIT | |
| U 052 | 1 | 51-05467G01 | INTEGRATED CIRCUIT | |
| U 053 | 1 | 51-84561L03 | INTEGRATED CIRCUIT | |
| U 054 | 1 | 51-84561L08 | INTEGRATED CIRCUIT | |
| U 064 | 1 | 51-80345A04 | INTEGRATED CIRCUIT | CA3240E SCREENED |
| U 065 | 1 | 51-80345A04 | INTEGRATED CIRCUIT | CA3240E SCREENED |
| U 066 | 1 | 51-80345A04 | INTEGRATED CIRCUIT | CA3240E SCREENED |
| U 067 | 1 | 51-80345A04 | INTEGRATED CIRCUIT | CA3240E SCREENED |
| U 068 | 1 | 51-90019B01 | INTEGRATED CIRCUIT | EPROM |
| U 069 | 1 | 51-84561L07 | INTEGRATED CIRCUIT | |
| VR001 | 1 | RG-1N5235B | DIODE,ZENER | |
| VR002 | 1 | RG-1N5235B | DIODE,ZENER | |
| VR003 | 1 | RG-1N5235B | DIODE,ZENER | |
| VR004 | 1 | RG-1N5235B | DIODE,ZENER | |
| VR005 | 1 | RG-1N5235B | DIODE,ZENER | |
| VR006 | 1 | RG-1N5235B | DIODE,ZENER | |
| VR007 | 1 | RG-1N5235B | DIODE,ZENER | |
| VR008 | 1 | RG-1N5235B | DIODE,ZENER | |
| VR009 | 1 | RG-1N5235B | DIODE,ZENER | |
| VR010 | 1 | RG-1N5235B | DIODE,ZENER | |
| VR011 | 1 | RG-1N5235B | DIODE,ZENER | |
| VR012 | 1 | RG-1N5235B | DIODE,ZENER | |
| VR013 | 1 | RG-1N5235B | DIODE,ZENER | |
| VR014 | 1 | RG-1N5235B | DIODE,ZENER | |
| VR015 | 1 | RG-1N5235B | DIODE,ZENER | |
| VR016 | 1 | RG-1N5235B | DIODE,ZENER | |

### IEEE Interface Kit

| | | | | |
|---|---|---|---|---|
| 001 | 1 | RTC-1013A | OPTION'B'BD ASSY(A13) | |
| 002 | 1 | RTL-1023A | RF INPUT MODULE ASSY(A17) | |
| 003 | 1 | 30-80344B14 | CABLE ASSEMBLY | A17AT1 TO A13J1 |
| 004 | 1 | 30-80343B92 | CABLE ASSEMBLY(IEEE BUS) | |
| 005 | 1 | 30-80343B93 | CABLE ASSEMBLY(IEEE I/O) | |
| 008 | 4 | 04-80335A99 | WASHER | .156 |
| 011 | 1 | 36-80335A88 | KNOB, SKIRTED | |
| 014 | 2 | 03-80343B58 | JACKSOCKET ASSEMBLY | |

### Front Cover IEEE Kit

| | | | | |
|---|---|---|---|---|
| 002 | 1 | 30-80336A36 | CORD, LINE | |
| 003 | 1 | TEKA-24A | ANTENNA | |
| 004 | 1 | 15-80342B27 | COVER | CRT-SUN |
| 005 | 1 | RTL-4011A | SCOPE PROBE | |
| 006 | 1 | RTM-4000B | TEST MIKE | |
| 007 | 1 | RTL-4055B | WATTMETER ADAPTER | |
| 008 | 1 | 54-80338A82 | WARRANTY CARD | |
| 009 | 1 | 68-80309A54 | PPR CARD | |

### IEEE Accessory Kit

| | | | |
|---|---|---|---|
| 001 | 1 | 15-10811A08 | CONNECTOR,4 PIN |
| 002 | 1 | 15-10812A01 | CLAMP |

21-8

| Find No. | Qty. Req. | Part No. | Nomenclature | Part Value |
|---|---|---|---|---|

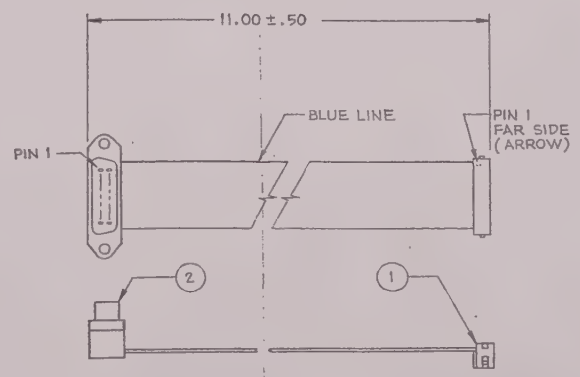


36930-134

004 **Cable Assembly, IEEE Bus**
30-80343B92

| | | | | |
|---|---|---|---|---|
| 001 | 1 | 09-80343B52 | SOCKET, CLOSED END | 26 PIN |
| 002 | 1 | 09-80343B49 | CONNECTOR, FEMALE | 24 PIN |

| Find No. | Qty. Req. | Part No. | Nomenclature | Part Value |
|---|---|---|---|---|

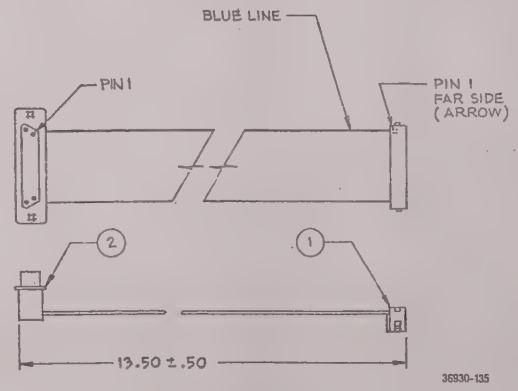


36930-135

005 **Cable Assembly, IEEE I/O**
30-80343B93

| | | | | |
|---|---|---|---|---|
| 001 | 1 | 09-80343B52 | SOCKET, CLOSED END | 26 PIN |
| 002 | 1 | 09-80343B50 | SOCKET | 25 PIN |

| Find No. | Qty. Req. | Part No. | Nomenclature | Part Value |
|---|---|---|---|---|

### IEEE Connector Kit

| | | | | |
|---|---|---|---|---|
| 001 | 1 | RTC-4047A | PRINTED WIRING BOARD ASSY | JUMPER CARD |
| 006 | 2 | 04-80335A99 | WASHER | .156 |

001 **Jumper Card (Option B)**
RTC-4047A

| | | | | |
|---|---|---|---|---|
| 004 | 1 | 45-80339B28 | CARD EJECTOR | |
| 005 | 1 | 45-80339B31 | CARD EJECTOR | MARKED |
| 006 | 3 | 30-80344B18 | JUMPER,WIRE | |

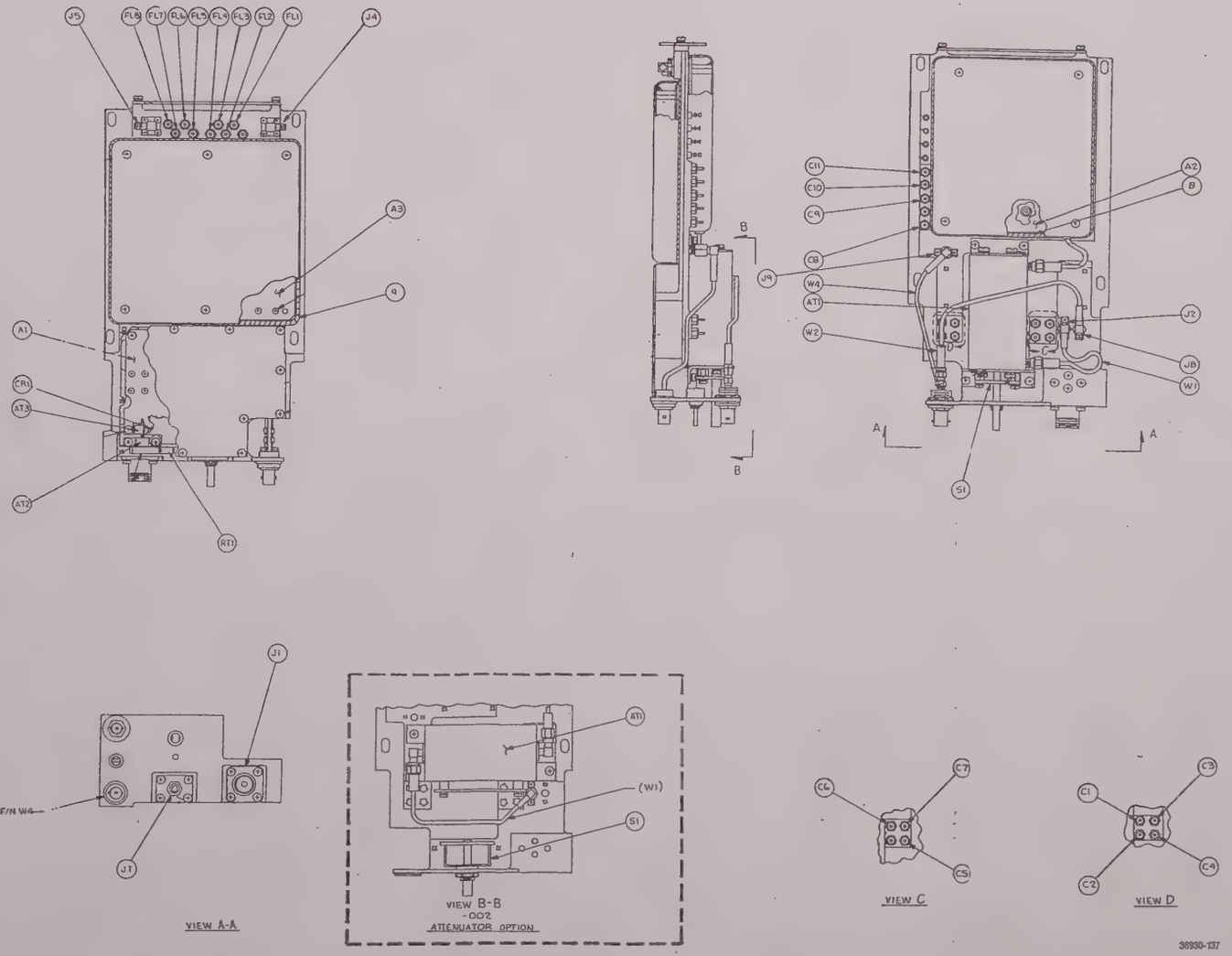


## RF INPUT MODULE REMOTE INTERFACE OPTION

| Find No. | Qty. Req. | Part No. | Nomenclature | Part Value |
|---|---|---|---|---|
| 008 | 1 | 32-80342B94 | GASKET, EMI | |
| 009 | 1 | 32-80342B95 | GASKET, EMI | |
| A 001 | 1 | RTL-4158A | WATT METER ASSY(A17A1) | |
| A 002 | 1 | RTL-4156A | WIDE BND AMPL ASSY(A17A2) | |
| A 003 | 1 | RTL-4157A | DUPLEX GEN. ASSY(A17A3) | |
| AT001 | 1 | 01-80343B84 | ATTENUATOR | |
| AT002 | 1 | 17-80377A05 | ATTENUATOR, POWER | |
| AT003 | 1 | 01-80343B81 | ATTENUATOR, 15DB | |
| C 001 | 1 | 21-80342B51 | CAPACITOR | 5000PF-6MV-500 |
| C 002 | 1 | 21-80342B51 | CAPACITOR | 5000PF-6MV-500 |
| C 003 | 1 | 21-80342B51 | CAPACITOR | 5000PF-6MV-500 |
| C 004 | 1 | 21-80342B51 | CAPACITOR | 5000PF-6MV-500 |
| C 005 | 1 | 21-80342B51 | CAPACITOR | 5000PF-6MV-500 |
| C 006 | 1 | 21-80342B51 | CAPACITOR | 5000PF-6MV-500 |
| C 007 | 1 | 21-80342B51 | CAPACITOR | 5000PF-6MV-500 |
| C 008 | 1 | 21-80342B51 | CAPACITOR | 5000PF-6MV-500 |
| C 009 | 1 | 21-80342B51 | CAPACITOR | 5000PF-6MV-500 |
| C 010 | 1 | 21-80342B51 | CAPACITOR | 5000PF-6MV-500 |
| C 011 | 1 | 21-80342B51 | CAPACITOR | 5000PF-6MV-500 |
| CR001 | 1 | 48-87643C01 | DIODE | |
| FL001 | 1 | 91-80342B25 | FILTER | |
| FL002 | 1 | 91-80342B25 | FILTER | |
| FL003 | 1 | 91-80342B25 | FILTER | |
| FL004 | 1 | 91-80342B25 | FILTER | |
| FL005 | 1 | 91-80342B25 | FILTER | |
| FL006 | 1 | 91-80342B25 | FILTER | |
| FL007 | 1 | 91-80342B25 | FILTER | |
| FL008 | 1 | 91-80342B25 | FILTER | |
| FL009 | 1 | 91-80342B25 | FILTER | |
| FL010 | 1 | 91-80342B25 | FILTER | |
| FL011 | 1 | 91-80342B25 | FILTER | |
| FL012 | 1 | 91-80342B25 | FILTER | |
| J 001 | 1 | 28-80342B87 | CONNECTOR, MODIFIED | |
| J 002 | 1 | 28-80342B88 | CONNECTOR | MODIFIED |
| J 004 | 1 | 28-80342B89 | CONNECTOR | MODIFIED |
| J 005 | 1 | 28-80342B89 | CONNECTOR | MODIFIED |
| J 007 | 1 | 09-80331A70 | CONNECTOR | PHONE JACK |
| J 008 | 1 | 28-80342B88 | CONNECTOR | MODIFIED |
| J 009 | 1 | 28-80342B88 | CONNECTOR | MODIFIED |
| J 010 | 1 | 09-80340B39 | CONNECTOR | |
| R 003 | 1 | 06-00185A19 | RESISTOR | 56-5-1/8W |
| RT001 | 1 | 06-83600K05 | THERMISTOR | |
| S 001 | 1 | 40-80369A08 | WAFER SWITCH, 14 POS | |
| S 002 | 1 | 40-80335A80 | SWITCH, TOGGLE | SPDT |
| W 001 | 1 | 30-80344B06 | CABLE ASSEMBLY-W1 | |
| W 002 | 1 | 30-80344B08 | CABLE ASSEMBLY-W2 | ANTENNA/A1 |
| W 004 | 1 | 30-80344B09 | CABLE ASSEMBLY-W4 | |
| W001 | | | **Cable Assembly (W1) 30-80344B06** | |
| P 001 | 1 | 09-80331A75 | CONNECTOR | |
| P 002 | 1 | 09-80343B86 | CONNECTOR | |
| W002 | | | **Cable Assembly (W2) 30-80344B08** | |
| P 002 | 1 | 09-80331A75 | CONNECTOR | |
| W004 | | | **Cable Assembly (W4, Duplex/A3) 30-80344B09** | |
| J 006 | 1 | 28-80342B90 | CONNECTOR, BNC | |
| P 001 | 1 | 09-80331A75 | CONNECTOR | |



*Figure 21-4. Assembly and Parts List*

*ure 21-5b. Schematic (sheet 2 of 6)*

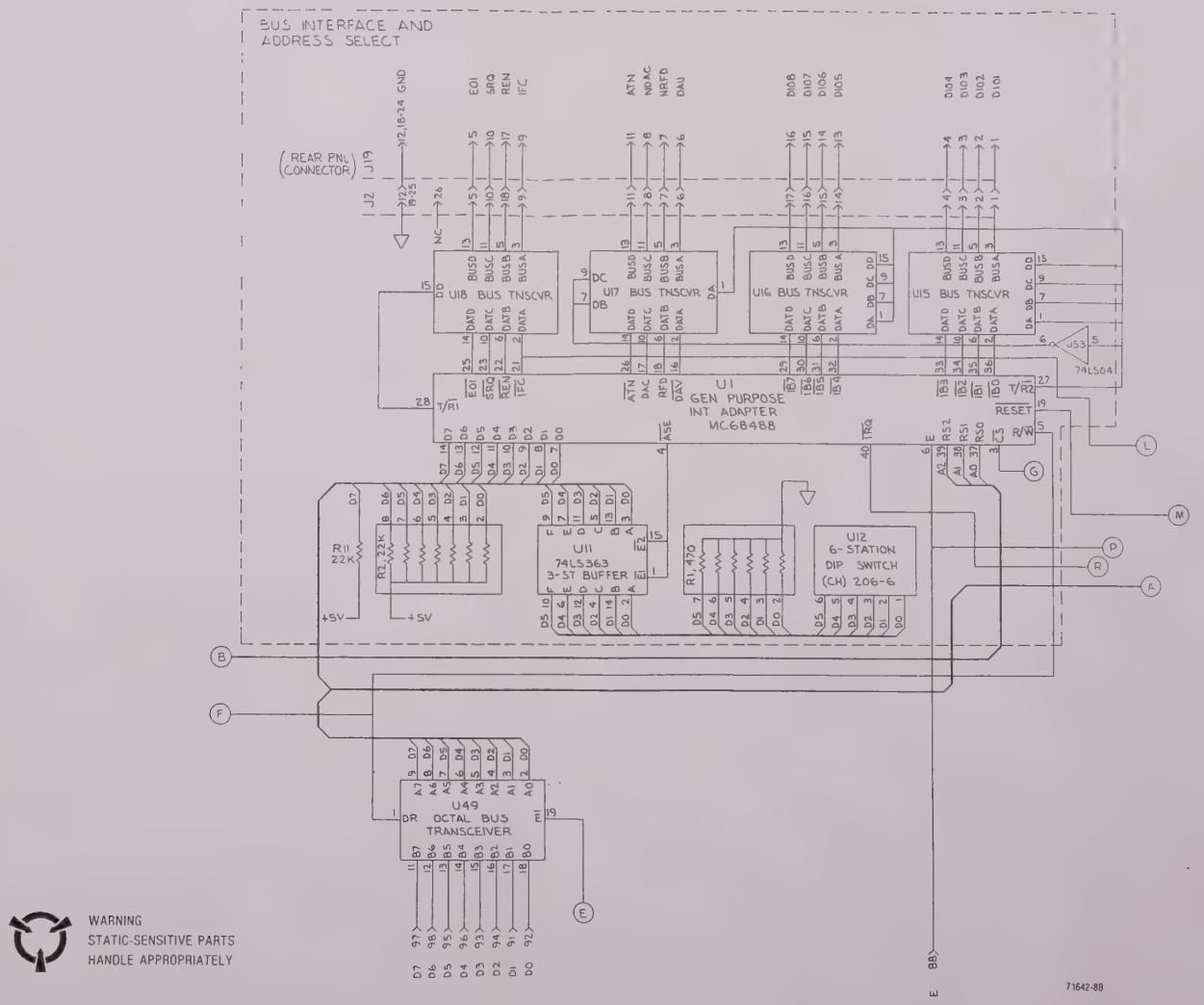

*Figure 21-5a. Schematic (sheet 1 of 6,*

NOTES

UNLESS OTHERWISE SPECIFIED
ALL RESISTORS ARE IN OHMS ±5 PCT 1/4 WATT
ALL CAPACITORS ARE IN uF
ALL VOLTAGES ARE IN DC

2 PARTIAL REFERENCE DESIGNATIONS ARE SHOWN FOR COMPLETE DESIGNATIONS PREFIX WITH A1A13

3 FOR REFERENCE DRAWINGS REFER TO

4 BOARD IS LAYED OUT TO NORMALLY BE PLUGGED INTO A13 SLOT HOWEVER IT MAY BE MADE COMPATIBLE WITH THE A12 SLOT BY CUTTING THE TRACK BETWEEN E1 AND E2, E4 AND E5, E7 AND E8, E10 AND E11, E13 AND E14, E16 AND E17 THEN ADD JUMPERS FROM E3 TO E2 E6 TO E5, E9 TO E8, E12 TO E10, E15 TO E13, E18 TO E16

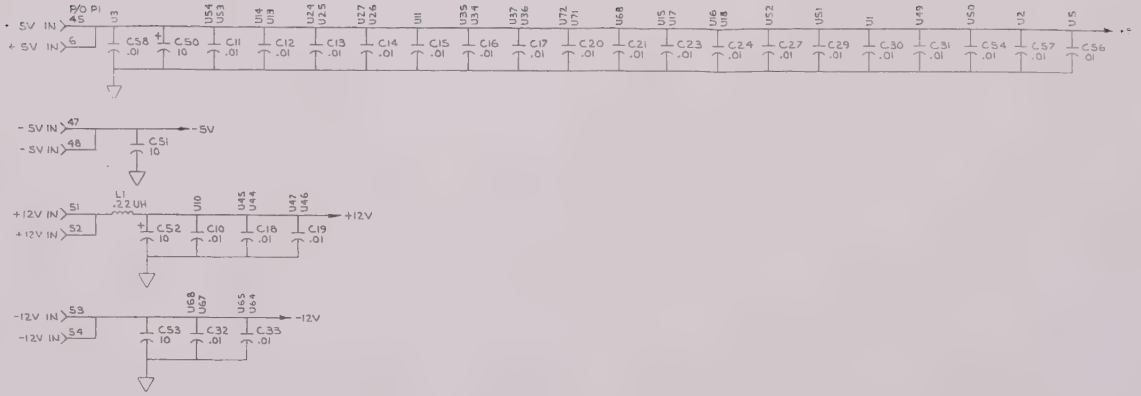


| REF DES | TYPE | GND | +5V | 5V | +12V | 12V | NO CONN |
|---|---|---|---|---|---|---|---|
| U1 | MC68488 | 1 2 40 | 20 | | | | 15 24 |
| U2 | MC6821 | 1 | 20 22 24 | | | | 38 40 |
| U3 | R65C51 | 1,16 | 215 | | | | 5 |
| U4 | MC1488 | 7 | | | 14 | 1 | 4 5 6 |
| U5 | MC1489 | 7 | 14 | | | | 2 5 8 9 10 12 |
| U10 | UDN5116A | 1, 8 | | | 9 | | 2 15 16 |
| U11 | 74LS365 | 8 | 16 | | | | |
| U12 | 206-6 | | 7 12 | | | | |
| U13 | 74LS138 | 8 | 6 16 | | | | 7 9 13 14 |
| U14 | 74LS138 | 5 8 | 16 | | | | |
| U15 | MC3448 | 4 8 12 | 16 | | | | |
| U16 | MC3448 | 8 8 12 | 16 | | | | |
| U17 | MC3448 | 4, 8 12 15 | 16 | | | | |
| U18 | MC3448 | 1 4 7 8 12 | 9 16 | | | | |
| U21 | MC14174 | 8 | 1, 16 | | | | 12, 15 |
| U24 | MC14174 | 8 | 1, 16 | | | | |
| U25 | MC14174 | 8 | 1, 16 | | | | |
| U26 | MC14174 | 8 | 1 16 | | | | |
| U27 | MC14174 | 8 | 1 16 | | | | |
| U34 | MC14174 | 8 | 1 16 | | | | |
| U35 | MC14174 | 8 | 1 16 | | | | |
| U36 | MC14174 | 8 | 1 16 | | | | |
| U37 | MC14174 | 8 | 1 16 | | | | |

| REF DES | TYPE | GND | +5V | 5V | +12V | 12V | NO CONN |
|---|---|---|---|---|---|---|---|
| U44 | AD7531 | 2 3 | | | 16 | | |
| U45 | AD7531 | 2 3 | | | 16 | | |
| U46 | AD7531 | 2 3 | | | 16 | | |
| U47 | AD7531 | 2 3 | | | 16 | | |
| U49 | 74LS245 | 10 | 20 | | | | |
| U50 | 74LS27 | 7 11 | 14 | | | | |
| U51 | MC14053 | 8 8 | 16 | 7 | | | 1 5 15 |
| U52 | MC14053 | 8 8 | 16 | 7 | | | |
| U53 | 74LS04 | 7 | 14 | | | | |
| U54 | 74LS10 | 7 | 3 14 | | | | |
| U64 | CA3240 | | | | 8 | 4 | |
| U65 | CA3240 | | | | 8 | 4 | |
| U66 | CA3240 | | | | 8 | 4 | |
| U67 | CA3240 | | | | 8 | 4 | |
| U68 | MCM68764L | 14 | 28 | | | | |
| U70 | HM6116 | 12, 20 | 24 | | 9 | | |
| U71 | 74LS138 | 8 | 6 16 | | | 7 9 10 | |
| U72 | MC14599 | 2 9 | 18 | | | 1, 12-15, 17 | |
| U73 | 74LS02 | 7 | 14 | | | | 8-13 |

WARNING:
STATIC-SENSITIVE PARTS
HANDLE APPROPRIATELY

SPARES

71642-8A

*Figure 21-5c. Schematic (sheet 3 of 6)*

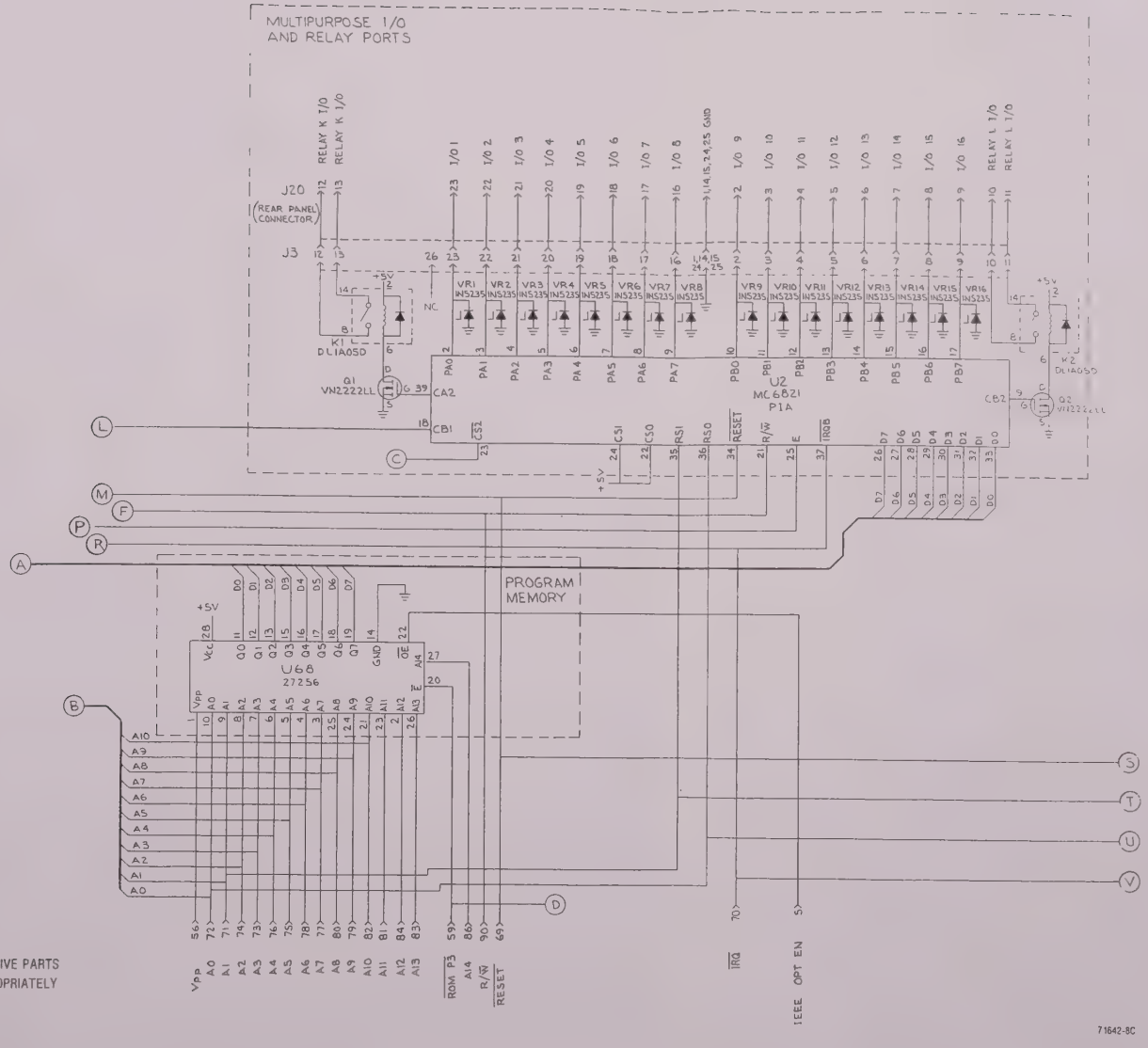

*Figure 21-5d. Schematic (sheet 4 of 6)*

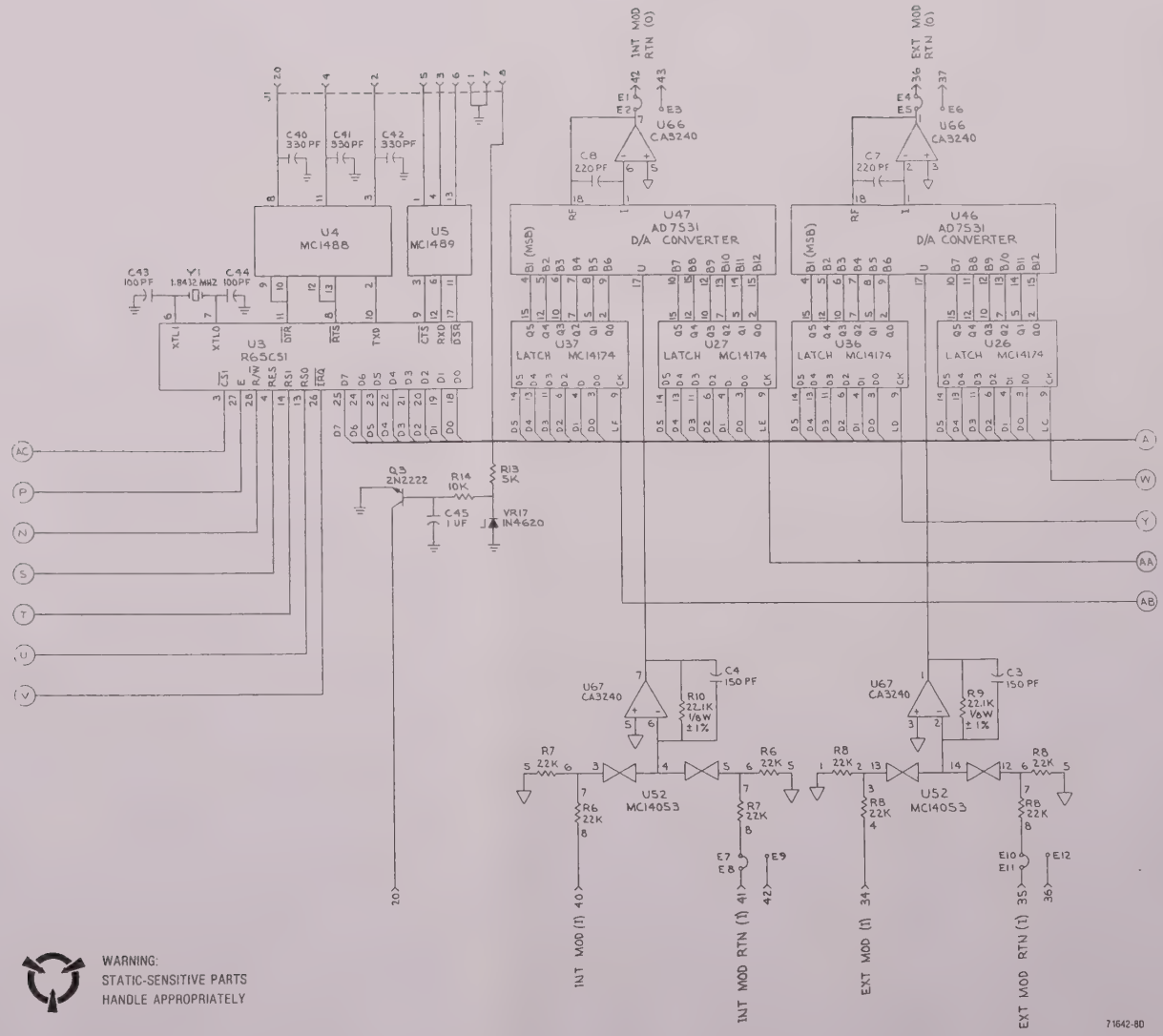

*igure 21-5f. Schematic (sheet 6 of 6)*

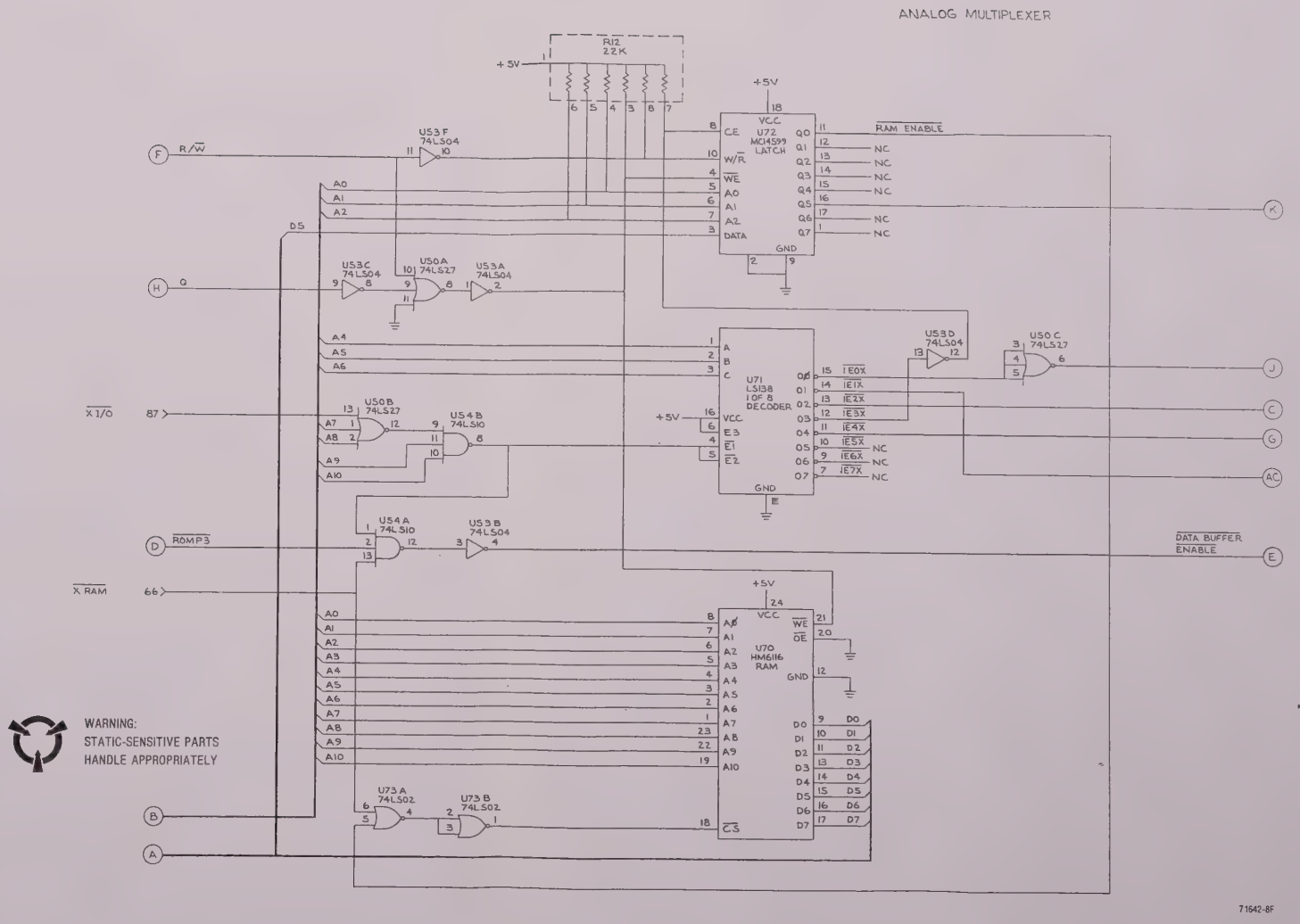

*Figure 21-5e. Schematic (sheet 5 of 6)*

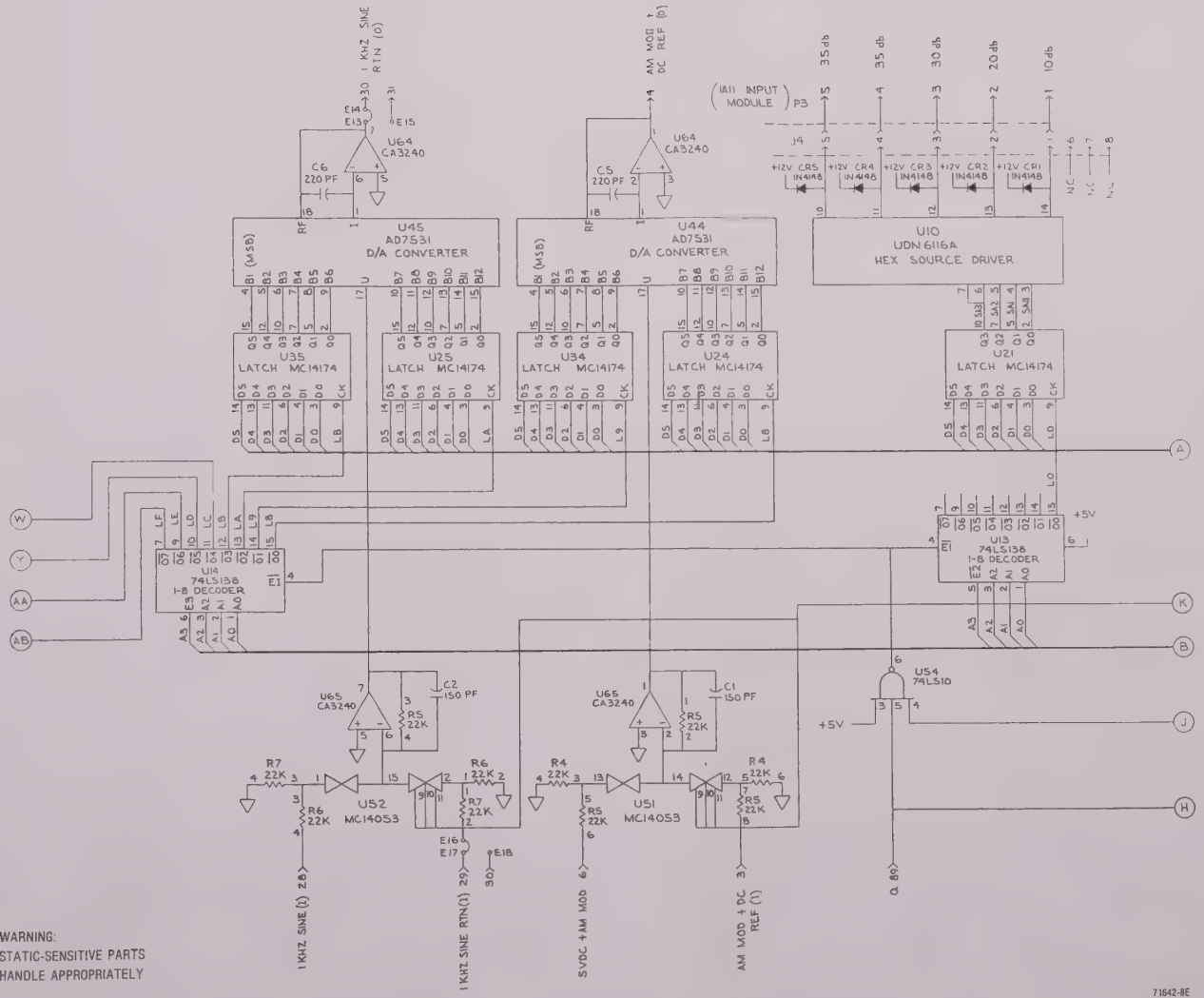


WARNING:
STATIC-SENSITIVE PARTS
HANDLE APPROPRIATELY

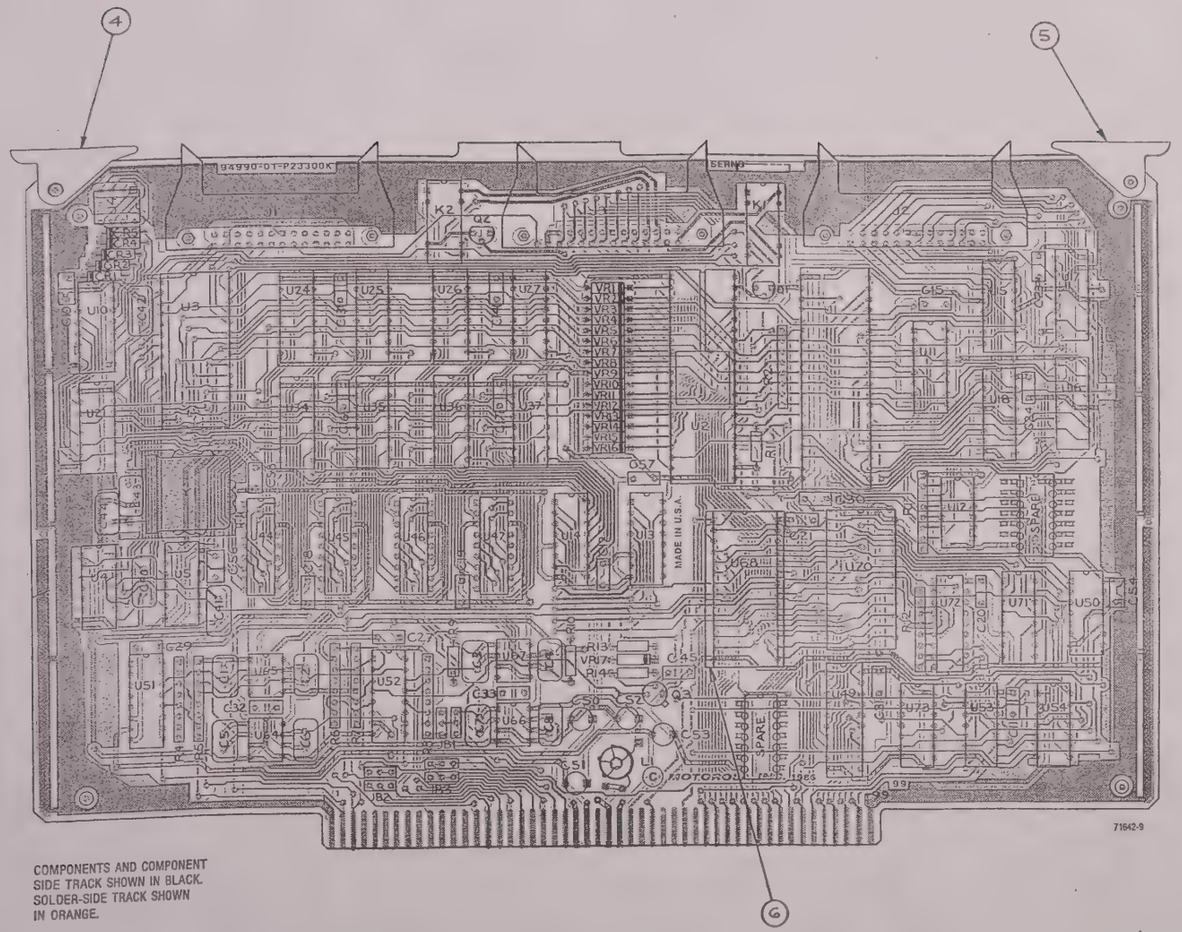


COMPONENTS AND COMPONENT SIDE TRACK SHOWN IN BLACK. SOLDER-SIDE TRACK SHOWN IN ORANGE.

| Find No. | Qty. Req. | Part No. | Nomenclature | Part Value |
|---|---|---|---|---|
| 004 | 1 | 45-80339B28 | CARD EJECTOR | |
| 005 | 1 | 45-80339B32 | CARD EJECTOR | MARKED |
| 006 | 1 | 09-80339B81 | SOCKET | 28 PIN |
| C 001 | 1 | 21-80369A94 | CAPACITOR | 150PF-5-500 |
| C 002 | 1 | 21-80369A94 | CAPACITOR | 150PF-5-500 |
| C 003 | 1 | 21-80369A94 | CAPACITOR | 150PF-5-500 |
| C 004 | 1 | 21-80369A94 | CAPACITOR | 150PF-5-500 |
| C 005 | 1 | 21-80339B26 | CAPACITOR | 220PF-5-500 |
| C 006 | 1 | 21-80339B26 | CAPACITOR | 220PF-5-500 |
| C 007 | 1 | 21-80339B26 | CAPACITOR | 220PF-5-500 |
| C 008 | 1 | 21-80339B26 | CAPACITOR | 220PF-5-500 |
| C 010 | 1 | 21-80342B09 | CAPACITOR | .01UF-20-50 |
| C 011 | 1 | 21-80342B09 | CAPACITOR | .01UF-20-50 |
| C 012 | 1 | 21-80342B09 | CAPACITOR | .01UF-20-50 |
| C 013 | 1 | 21-80342B09 | CAPACITOR | .01UF-20-50 |
| C 014 | 1 | 21-80342B09 | CAPACITOR | .01UF-20-50 |
| C 015 | 1 | 21-80342B09 | CAPACITOR | .01UF-20-50 |
| C 016 | 1 | 21-80342B09 | CAPACITOR | .01UF-20-50 |
| C 017 | 1 | 21-80342B09 | CAPACITOR | .01UF-20-50 |
| C 018 | 1 | 21-80342B09 | CAPACITOR | .01UF-20-50 |
| C 019 | 1 | 21-80342B09 | CAPACITOR | .01UF-20-50 |
| C 020 | 1 | 21-80342B09 | CAPACITOR | .01UF-20-50 |
| C 021 | 1 | 21-80342B09 | CAPACITOR | .01UF-20-50 |
| C 023 | 1 | 21-80342B09 | CAPACITOR | .01UF-20-50 |
| C 024 | 1 | 21-80342B09 | CAPACITOR | .01UF-20-50 |
| C 027 | 1 | 21-80342B09 | CAPACITOR | .01UF-20-50 |
| C 029 | 1 | 21-80342B09 | CAPACITOR | .01UF-20-50 |
| C 030 | 1 | 21-80342B09 | CAPACITOR | .01UF-20-50 |
| C 031 | 1 | 21-80342B09 | CAPACITOR | .01UF-20-50 |
| C 032 | 1 | 21-80342B09 | CAPACITOR | .01UF-20-50 |
| C 033 | 1 | 21-80342B09 | CAPACITOR | .01UF-20-50 |
| C 040 | 1 | 21-80339B19 | CAPACITOR | 330PF-5-100 |
| C 041 | 1 | 21-80339B19 | CAPACITOR | 330PF-5-100 |
| C 042 | 1 | 21-80339B19 | CAPACITOR | 330PF-5-100 |
| C 043 | 1 | 21-80341B45 | CAPACITOR | 100PF-5-50 |
| C 044 | 1 | 21-80341B45 | CAPACITOR | 100PF-5-50 |
| C 045 | 1 | 21-80342B46 | CAPACITOR | 1UF-20-50 |
| C 050 | 1 | 23-80341B15 | CAPACITOR | 10UF-20-50 |
| C 051 | 1 | 23-80341B15 | CAPACITOR | 10UF-20-50 |
| C 052 | 1 | 23-80341B15 | CAPACITOR | 10UF-20-50 |
| C 053 | 1 | 23-80341B15 | CAPACITOR | 10UF-20-50 |
| C 054 | 1 | 21-80342B09 | CAPACITOR | .01UF-20-50 |
| C 056 | 1 | 21-80342B09 | CAPACITOR | .01UF-20-50 |
| C 057 | 1 | 21-80342B09 | CAPACITOR | .01UF-20-50 |
| C 058 | 1 | 21-80342B09 | CAPACITOR | .01UF-20-50 |
| CR001 | 1 | 48-84463K02 | DIODE | |
| CR002 | 1 | 48-84463K02 | DIODE | |
| CR003 | 1 | 48-84463K02 | DIODE | |
| CR004 | 1 | 48-84463K02 | DIODE | |
| CR005 | 1 | 48-84463K02 | DIODE | |
| J 001 | 1 | 09-80331A95 | SOCKET,SOLDER DIP | 8 PIN |
| J 002 | 1 | 28-80343B51 | CONNECTOR | 26 PIN HEADER |
| J 003 | 1 | 28-80343B51 | CONNECTOR | 26 PIN HEADER |
| J 004 | 1 | 09-80331A95 | SOCKET, SOLDER DIP | |
| K 001 | 1 | 80-80339B76 | RELAY,ELECTRONIC | |
| K 002 | 1 | 80-80339B76 | RELAY,ELECTRONIC | |
| L 001 | 1 | 25-80342B79 | COIL,TOROID | |
| Q 001 | 1 | 48-80341B23 | TRANSISTOR | |
| Q 002 | 1 | 48-80341B23 | TRANSISTOR | |
| Q 003 | 1 | 48-80341B23 | TRANSISTOR | |
| R 001 | 1 | 51-80343B80 | RESISTOR NETWORK | HEX SIP 470 |
| R 002 | 1 | 06-80340B11 | RESISTOR NETWORK | HEX SIP 22K |
| R 004 | 1 | 51-80368A78 | RESISTOR NETWORK | QUAD SIP 22K |
| R 005 | 1 | 51-80368A78 | RESISTOR NETWORK | QUAD SIP 22K |
| R 006 | 1 | 51-80368A78 | RESISTOR NETWORK | QUAD SIP 22K |
| R 007 | 1 | 51-80368A78 | RESISTOR NETWORK | QUAD SIP 22K |
| R 008 | 1 | 51-80368A78 | RESISTOR NETWORK | QUAD SIP 22K |
| R 009 | 1 | 06-10621D25 | RESISTOR | 22.1K-1-1/4 |
| R 010 | 1 | 06-10621D25 | RESISTOR | 22.1K-1-1/4 |
| R 011 | 1 | 06-11009C81 | RESISTOR | 22K-5-1/4 |
| R 012 | 1 | 51-80368A78 | RESISTOR | QUAD SIP 22K |
| R 013 | 1 | 06-11009C66 | RESISTOR | 5.1K-5-1/4 |
| R 014 | 1 | 06-1109C73 | RESISTOR | 10K-5-1/4 |
| U 001 | 1 | 51-80340B22 | INTEGRATED CIRCUIT | |
| U 002 | 1 | 51-82807K20 | INTEGRATED CIRCUIT | |
| U 003 | 1 | 51-80375B53 | INTEGRATED CIRCUIT | |
| U 004 | 1 | 51-80375B54 | INTEGRATED CIRCUIT | |
| U 005 | 1 | 51-80375B55 | INTEGRATED CIRCUIT | |
| U 010 | 1 | 51-80346A83 | INTEGRATED CIRCUIT | |
| U 011 | 1 | 51-80340B82 | INTEGRATED CIRCUIT | |
| U 012 | 1 | 48-80369A07 | SWITCH,6 STATION | |

| Find No. | Qty. Req. | Part No. | Nomenclature | Part Value |
|---|---|---|---|---|
| U 013 | 1 | 51-84561L41 | INTEGRATED CIRCUIT | |
| U 014 | 1 | 51-84561L41 | INTEGRATED CIRCUIT | |
| U 015 | 1 | 51-80340B20 | INTEGRATED CIRCUIT | |
| U 016 | 1 | 51-80340B20 | INTEGRATED CIRCUIT | |
| U 017 | 1 | 51-80340B20 | INTEGRATED CIRCUIT | |
| U 018 | 1 | 51-80340B20 | INTEGRATED CIRCUIT | |
| U 021 | 1 | 51-83627M89 | INTEGRATED CIRCUIT | |
| U 024 | 1 | 51-83627M89 | INTEGRATED CIRCUIT | |
| U 025 | 1 | 51-83627M89 | INTEGRATED CIRCUIT | |
| U 026 | 1 | 51-83627M89 | INTEGRATED CIRCUIT | |
| U 027 | 1 | 51-83627M89 | INTEGRATED CIRCUIT | |
| U 034 | 1 | 51-83627M89 | INTEGRATED CIRCUIT | |
| U 035 | 1 | 51-83627M89 | INTEGRATED CIRCUIT | |
| U 036 | 1 | 51-83627M89 | INTEGRATED CIRCUIT | |
| U 037 | 1 | 51-83627M89 | INTEGRATED CIRCUIT | |
| U 044 | 1 | 51-80345A98 | INTEGRATED CIRCUIT | AD7531JPN SCREENED |
| U 045 | 1 | 51-80345A98 | INTEGRATED CIRCUIT | AD7531JPN SCREENED |
| U 046 | 1 | 51-80345A98 | INTEGRATED CIRCUIT | AD7531JPN SCREENED |
| U 047 | 1 | 51-80345A98 | INTEGRATED CIRCUIT | AD7531JPN SCREENED |
| U 049 | 1 | 51-82609M57 | INTEGRATED CIRCUIT | |
| U 050 | 1 | 51-84561L38 | INTEGRATED CIRCUIT | |
| U 051 | 1 | 51-05467G01 | INTEGRATED CIRCUIT | |
| U 052 | 1 | 51-05467G01 | INTEGRATED CIRCUIT | |
| U 053 | 1 | 51-84561L03 | INTEGRATED CIRCUIT | |
| U 054 | 1 | 51-84561L08 | INTEGRATED CIRCUIT | |
| U 064 | 1 | 51-80345A04 | INTEGRATED CIRCUIT | CA3240E SCREENED |
| U 065 | 1 | 51-80345A04 | INTEGRATED CIRCUIT | CA3240E SCREENED |
| U 066 | 1 | 51-80345A04 | INTEGRATED CIRCUIT | CA3240E SCREENED |
| U 067 | 1 | 51-80345A04 | INTEGRATED CIRCUIT | CA3240E SCREENED |
| U 068 | 1 | 51-90019B01 | INTEGRATED CIRCUIT | EPROM |
| U 070 | 1 | 51-84561L44 | INTEGRATED CIRCUIT | |
| U 071 | 1 | 51-84561L41 | INTEGRATED CIRCUIT | |
| U 072 | 1 | 51-80375B56 | INTEGRATED CIRCUIT | |
| U 073 | 1 | 51-84561L06 | INTEGRATED CIRCUIT | |
| VR001 | 1 | RG-1N5235B | DIODE,ZENER | |
| VR002 | 1 | RG-1N5235B | DIODE,ZENER | |
| VR003 | 1 | RG-1N5235B | DIODE,ZENER | |
| VR004 | 1 | RG-1N5235B | DIODE,ZENER | |
| VR005 | 1 | RG-1N5235B | DIODE,ZENER | |
| VR006 | 1 | RG-1N5235B | DIODE,ZENER | |
| VR007 | 1 | RG-1N5235B | DIODE,ZENER | |
| VR008 | 1 | RG-1N5235B | DIODE,ZENER | |
| VR009 | 1 | RG-1N5235B | DIODE,ZENER | |
| VR010 | 1 | RG-1N5235B | DIODE,ZENER | |
| VR011 | 1 | RG-1N5235B | DIODE,ZENER | |
| VR012 | 1 | RG-1N5235B | DIODE,ZENER | |
| VR013 | 1 | RG-1N5235B | DIODE,ZENER | |
| VR014 | 1 | RG-1N5235B | DIODE,ZENER | |
| VR015 | 1 | RG-1N5235B | DIODE,ZENER | |
| VR016 | 1 | RG-1N5235B | DIODE,ZENER | |
| VR017 | 1 | 48-83461E03 | DIODE | |
| Y 001 | 1 | NDK-018 | CRYSTAL | 1.8432MHz |

REMOTE INTERFACE OPTION

*Figure 21-6. Printed Wiring Board Assembly and Parts List*

## 22.1 DESCRIPTION

The Secure Com option contains two independent sections: an encode section and a decode section. These sections interface with the R2001D transmitter and receiver to allow encrypted messages to be transmitted and received via RF channels. In addition, line drivers and receivers are provided to permit signaling to occur through twisted pairs and modems. The Secure Com option provides programming capability, wherein a radio can be programmed with a test key or by a hand-held key inserter. Measurements made by the Secure Com option include the following:

- deviation measurement (both transmitted and received)
- line level measurement-ac voltage being output to the line drivers and received from the line receivers
- bit error rate measurement-number of bits in error to 0.01 percent.

Other Secure Com features are:

- scaled oscilloscope displays of various portions of the transmitted and received messages
- end of message (EOM) detection and generation ability
- self test functions
- dual code radio testing capability.

## 22.2 THEORY OF OPERATION

### 22.2.1 TRANSMIT

The Secure Com Communications System Analyzer is designed to test narrowband FM radios which transmit encrypted audio signals. The radios to be tested use a Continuously Variable Slope Delta Modulator (CVSD) to digitize the microphone audio at a 12 kB/sec rate. After digitization, the plain text to be transmitted is input to the encryption circuitry. The resulting cipher text is then splatter-filtered at 6 kHz to remove upper harmonics and transmitted. The nominal frequency deviation for these radios is 4.0 kHz. Carrier frequencies of these radios can range from 100 kHz to 999.999 MHz and still remain compatible with the test system.

### 22.2.2 RECEIVE

In receive mode, the radios to be tested demodulate the received signal and feed the resulting encrypted data stream to a bit synchronizer circuit. The receiver is self-synchronizing, meaning that no preamble is required to acquire the signal. Reclocked data is input to the encryption circuitry which decodes the data. The received plain text is converted to an analog waveform in the CVSD. After amplification, this audio waveform is sent to the speaker.

## 22.3 ENCODER SECTION

### 22.3.1 INPUTS

The encoder has inputs for the following signals: internal 1-kHz, microphone audio, and external modulation (input through the R2001D front panel). These signals are internally summed so they can be used individually or combined to produce various waveforms. The adjustments provided on the front panel for the 1-kHz level and ext. mod. level, control the level of these signals at the encoder input and have no effect on the transmitted encrypted data deviation level.

### 22.3.2 ENCRYPTION TYPE

The Secure Com option has the ability to encode and decode encrypted messages. There are provisions for the R2004/5D to hold, as many as four encryption circuits. The R2004/5D can be loaded with multiple encryption circuits of the same type in order that secure systems operating on different code keys can be monitored and tested without reprogramming. Only radios which encrypt the audio as described in paragraphs 22.2.1 and 22.2.2 will be able to operate with the Secure Com test option. Manufacturers other than Motorola produce encrypted radios which are not compatible with the Secure Com tester.

### 22.3.3 ENCODER OUTPUTS

The encoder section outputs are baseband encrypted data and modulated RF. The baseband encrypted data is available at the MOD OUT jack on the R2004/5D front panel, and also at the LINE OUT and SINGLE ENDED OUT ports on the junction box. LINE OUT is a balanced-line output. Modulated RF is output at the antenna port, the RF I/O port, and the duplex generator port. The internal modulation signal generated by the audio code synthesizer is summed into the encoder outputs. This is to allow the injection of an undesired signal component to introduce bit errors. The summing occurs before RF modulation is complete so the distorted waveform can be transmitted. The CODE SYNTH LVL adjustment on the front

panel controls the amount of undesired signal injection. This adjustment directly affects the modulation level of the transmitted signal; therefore in normal operation CODE SYNTH LVL must be in the MIN position. This summed signal also goes to the line drivers enabling predistorted waveforms to be sent at baseband frequencies.

## 22.4 DECODER SECTION

### 22.4.1 INPUTS

The Secure Com decoder can input encrypted signals in RF or baseband form. Modulated RF signals can be input through the antenna port and the RF I/O port. Encrypted baseband signals can be input in balanced-line form at the LINE IN port on the interface junction box, or in single-ended form by grounding one of the LINE IN terminals.

### 22.4.2 DECRYPTION TYPES

Refer to paragraph 22.3.2 in the Encoder section description.

### 22.4.3 OUTPUTS

The decoder section has two outputs. The DEMOD OUT connector on the front panel has the demodulated signal (still encrypted) from the receiver. The other output is available on the junction box at the PLAIN TEXT OUT port. This output is the received, decoded, digital data before it is converted to an analog waveform. There is no means by which the received audio waveform can be output by the Secure Com option. It can be observed on the Secure Com internal oscilloscope and heard in the speaker.

## 22.5 PROGRAMMER SECTION

The programmer section of the Secure Com option performs three tasks: it outputs programming data to a radio to allow programming of a test key; it sends programming data to the encryption circuits internal to the Secure Com option to allow them to be programmed with a test key; and it permits programming data to flow from an external code key insertion device to the internal encryption circuits.

## 22.6. MEASUREMENTS

### 22.6.1 BIT ERROR RATE TEST (BER)

The Secure Com option for the R2001D has the ability to perform various BER tests on encrypted radios, and on any baseband system which performs the audio encryption process as described in paragraphs 22.3.1 and 22.3.2. The bit error rate test is accomplished by comparing the plain text into the encoder circuitry with the plain text out of the decoder circuitry of the R2004/5D decoder section or of the radio under test. When performing the BER test, the R2004/5D causes the input to the CVSD to be grounded. This causes the CVSD to produce a 6 kHz square wave output which is encrypted and transmitted via the RF synthesizer and the audio driver circuits. If a loop-around BER test is to be performed, encrypted data enters the Secure Com tester via the RF or line inputs. The encrypted data is then decoded and the resulting plain text sampled by the BER comparison circuit. If a BER test is to be performed on a simplex radio, the plain text out of the radio's decoder is sampled with a probe and routed into the BER comparison circuitry. Therefore, plain text is taken from the radio under test via a probe, or from the R2004/5D's internal decoder, according to the configuration of the R2004/5D. When the R2004/5D is generating in RF mode with the duplex generator off, plain text is input from the external probe. When the duplex generator is in RF mode and on, plain text is taken from the internal decoder. When the R2004/5D is in audio mode, plain text is always taken from the internal decoder regardless of the duplex generator's condition. The received, decoded plain text from the radio under test is assumed to be a 6.0-kHz square wave. This is not chopped or distorted in any way, with an amplitude of 8.0 to 10.0 volts whenever the BER test is active. Unless the waveform presented to the BER probe meets the preceeding requirements of frequency and amplitude, the BER test will not work.

The point inside the radios which must be probed to input the plain text data into the BER test circuitry is on the CVSD. This point is the CVSD output which supplies plain text to be transmitted (the A/D output), and should be available in all Motorola encrypted radios. When the radios are in the receive mode, this CVSD output supplies a reclocked version of the plain text out of the decoder.

### 22.6.2 DEVIATION MEASUREMENT

By the pseudorandom nature of the data transmitted by Motorola encrypted radios, deviation measurement is more difficult. This is caused by the frequency components in the transmitted data stream. The Secure Com tester offers a more accurate deviation measurement with a new display. The deviation measurement circuitry inside the standard R2001D chassis is AC coupled, but in the Secure Com test system, the low frequency pole of this coupling has been reduced, yielding a more accurate response to data such as that mentioned above. The manner in which the deviation information is displayed has also been enhanced for this particular type of measurement. The display contains two bar graphs, each centered at 4.0 kHz. One represents positive deviation and the other

represents negative deviation. By observing the bar graphs' swing about 4.0 kHz, the operator can get a qualitative measure of how the system is performing. A digital readout on the display indicates an averaged deviation value for a quantitative measurement. Transmitted deviation can be adjusted with the RF scan knob on the R2004/5D.

### 22.6.3 LINE LEVEL MEASUREMENT

The R2004/5D offers balanced and single-ended line inputs and outputs for interfacing with twisted pair systems and modems. To measure the voltage level output and the voltage level input, a line level display is incorporated into the Secure Com test system. The display contains two bar graphs, one for line level out and one for line level in. Both bar graphs are continuously active. The line voltage is measured in terms of AC voltage only. No power measurements are made. The output voltage level is adjusted with the RF scan control on the front panel of the Secure Com tester.

### 22.6.4 OSCILLOSCOPE DISPLAYS

To aid the service operator, the Secure Com tester provides oscilloscope displays of intermediate points in the encryption and decryption process. These intermediate points are as follows:

- the transmitted eye pattern (GEN EYE)
- the audio that is being encrypted (GEN AUDIO)
- the received eye pattern (MON EYE)
- the received audio after being decoded (MON AUDIO)

Depending on whether the R2004/5D is in RF or AUDIO mode, the MON EYE and GEN EYE displays show waveforms from different parts of the circuitry.

RF MODE:

When the R2004/5D is configured for RF mode, the GEN EYE and MON EYE displays take their information from the same place as the modulation screen in the standard R2001D. This is done because the MON EYE and GEN EYE screens are calibrated in order that deviation can be read directly off the oscilloscope screen. Internally, the MON EYE and GEN EYE display the waveforms from the modulation screen in the R2001D. Consequently, the generate/monitor switch on the front panel determines the waveform that will be displayed. For example, if the GEN EYE screen were selected, and the R2004/5D was already in monitor (receive) mode, the received eye pattern would be displayed instead of the transmitted eye pattern. To avoid operator confusion as to which waveform is being displayed, the Secure Com tester displays a ground line when the oscilloscope display selected does not correspond to the position of the generate/monitor switch.

AUDIO MODE:

When the R2004/5D has been set up for audio mode, the MON EYE and GEN EYE screens show the encrypted eye pattern as it is being output by the line drivers and received by the line receivers. The oscilloscope displays are calibrated so that voltage measurements can be made directly off the screen. The MON AUDIO and GEN AUDIO are the same displays regardless of the current mode of the R2004/5D. Both of these displays are scaled to reflect the actual voltages being input to the encoder section and being output by the decoder section.

## 22.7 FEATURES

### 22.7.1 END OF MESSAGE (EOM SIGNALING TEST)

Motorola encrypted radios transmit a burst of a 6.0 kHz sine wave at the end of a transmission to notify the receiving unit that the transmission is complete and that squelch should be applied. This is done to avoid "squelch tails". The Secure Com tester offers test capability of this signaling function by generating a continuous EOM and by detecting a received EOM.

### 22.7.2 SELF TESTING

The Secure Com tester performs basic tests on itself. Upon powerup, a self test is performed wherein the random access memory (RAM) and the read only memory (ROM), in both the standard R2001D circuits and the Secure Com circuits is checked. The RAM is tested by writing certain test patterns and then verifying them. ROM is tested by calculating the checksum and comparing it with the value stored in a particular location in the ROM. Another self test which can be performed is a test of the internal encoder and decoder. When the self test is selected by the operator, a 2.0 kHz tone is directly injected into the encoder. The encoder's output is looped to the decoder, and if the system is functioning properly, the 2.0 kHz tone will be heard through R2004/5D speaker.

### 22.7.3 DUAL CODE OPERATION

There are some Motorola radios encrypted with DVP (Securenet), which have a dual code feature. With dual code radios, another code key can be generated from the one which was programmed by throwing the switch on the radio. The dual code feature is only available with the Securenet encryption algorithm. Dual code operation can be tested with the R2004/5D. The Secure Com tester has a code selection which can only be made when operating with the Securenet format.

### 22.7.4 PLAIN TEXT OUTPUT

An output has been provided on the interface junction box to supply the received, decoded, digital data to the outside. This waveform is used to calculate certain radio parameters such as dynamic range, slope overload, and so forth. Only the electrical parameters of this output are specified by Motorola GEG.

### 22.7.5 PRINTER INTERFACE

The Secure Com tester offers a printer port on the side panel. The data output through this port is in serial form, designed to interface with RS-232 type printers. The operator can print any of the Secure Com display screens on the printer, with the exception of the oscilloscope displays (MON EYE, MON AUDIO, GEN EYE, GEN AUDIO) and the line level screen. For operational information of the printer interface, consult the Secure Com operator's manual.

*Figure 22-2a. Schematic (sheet 1 of 7)*

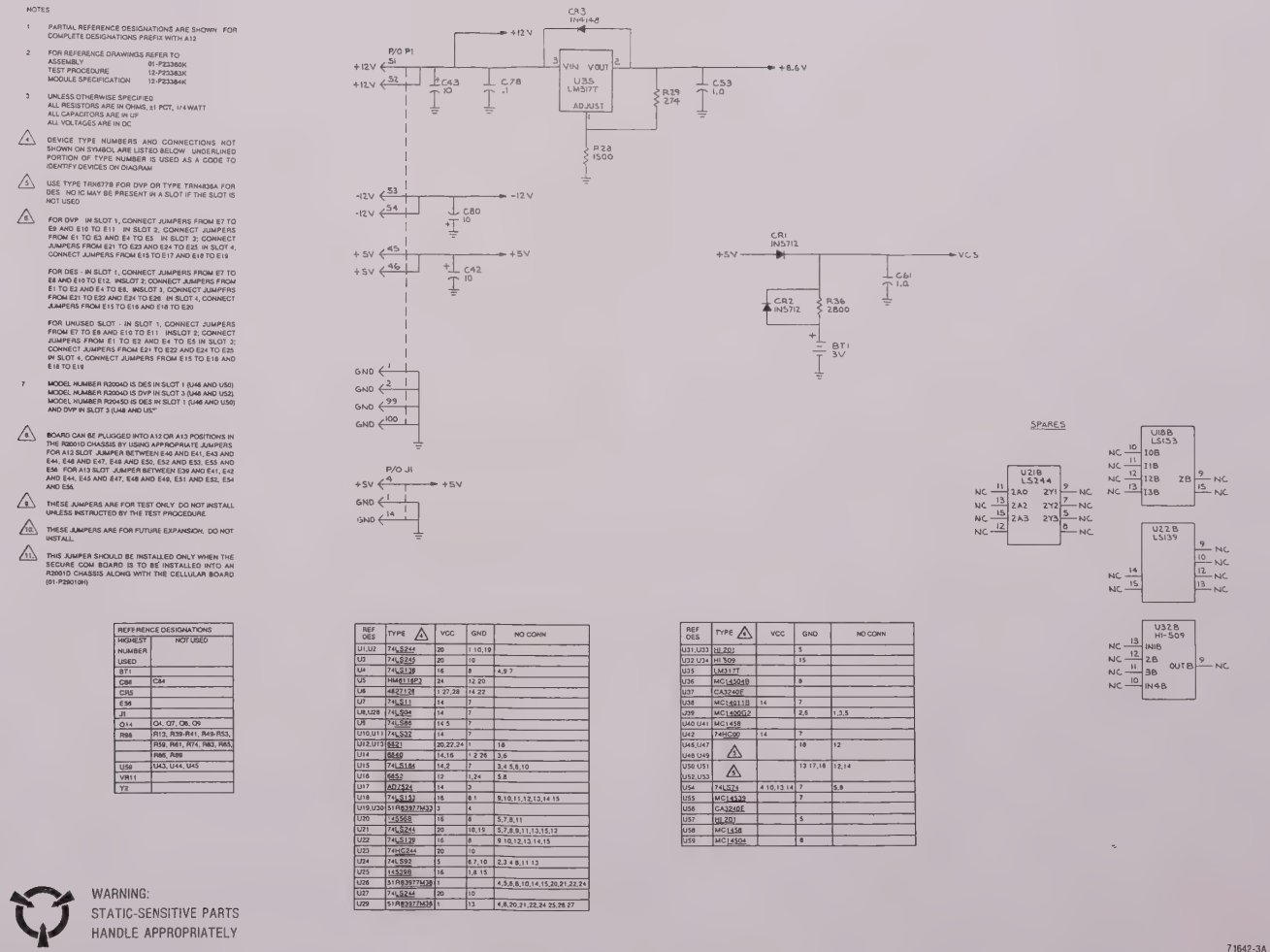


| REFERENCE DESIGNATIONS | |
|---|---|
| HIGHEST NUMBER USED | NOT USED |
| BT1 | |
| C88 | C84 |
| CR5 | |
| E56 | |
| J1 | |
| Q14 | Q4, Q7, Q8, Q9 |
| R98 | R13, R39-R41, R45-R53, R59, R61, R74, R83, R93, R95, R99 |
| U59 | U43, U44, U45 |
| VR11 | |
| Y2 | |

| REF DES | TYPE ⚠4 | VCC | GND | NO CONN |
|---|---|---|---|---|
| U1,U2 | 74LS244 | 20 | 1 10,19 | |
| U3 | 74LS245 | 20 | 10 | |
| U4 | 74LS138 | 16 | 8 | 4,9 7 |
| U5 | HM6116P3 | 24 | 12 20 | |
| U6 | 4827128 | 1 27,28 | 14 22 | |
| U7 | 74LS11 | 14 | 7 | |
| U8,U28 | 74LS04 | 14 | 7 | |
| U9 | 74LS86 | 14 5 | 7 | |
| U10,U11 | 74LS32 | 14 | 7 | |
| U12,U13 | 6821 | 20,22,24 | 1 | 18 |
| U14 | 6840 | 14,16 | 1 2 26 | 3,6 |
| U15 | 74LS186 | 14,2 | 7 | 3,4 5,6,10 |
| U16 | 6852 | 12 | 1,24 | 5,8 |
| U17 | AD7524 | 14 | 3 | |
| U18 | 74LS153 | 16 | 8 1 | 9,10,11,12,13,14 15 |
| U19,U30 | 51RB3977M33 | 3 | 4 | |
| U20 | 74S368 | 16 | 8 | 5,7,8,11 |
| U21 | 74LS241 | 20 | 10,19 | 5,7,8,9,11,13,15,17 |
| U22 | 74LS139 | 16 | 8 | 9 10,12,13,14,15 |
| U23 | 74HC244 | 20 | 10 | |
| U24 | 74LS92 | 5 | 6,7,10 | 2,3 4 8,11 13 |
| U25 | 145298 | 16 | 1,8 15 | |
| U26 | 51RB3977M38 | 1 | | 4,5,6,8,10,14,15,20,21,22,24 |
| U27 | 74LS244 | 20 | 10 | |
| U29 | 51RB3977M38 | 1 | 13 | 4,6,20,21,22,24 25,26,27 |

| REF DES | TYPE ⚠4 | VCC | GND | NO CONN |
|---|---|---|---|---|
| U31,U33 | HI-201 | | 5 | |
| U32 U34 | HI 509 | | 15 | |
| U35 | LM317T | | | |
| U36 | MC145049 | | 8 | |
| U37 | CA3240E | | | |
| U38 | MC14011B | 14 | 7 | |
| U39 | MC14000B2 | | 2,6 | 1,3,5 |
| U40 U41 | MC1458 | | | |
| U42 | 74HC00 | 14 | 7 | |
| U46,U47 | ⚠1 | | 10 | 12 |
| U48 U49 | | | | |
| U50 U51 | ⚠1 | | 13 17,18 | 12,14 |
| U52,U53 | | | | |
| U54 | 74LS74 | 4 10,13,14 | 7 | 5,9 |
| U55 | MC14539 | | 7 | |
| U56 | CA3240E | | | |
| U57 | HI-201 | | 5 | |
| U58 | MC1458 | | | |
| U59 | MC14504 | | 8 | |



WARNING:
STATIC-SENSITIVE PARTS
HANDLE APPROPRIATELY

*Figure 22-2b. Schematic (sheet 2 of 7)*

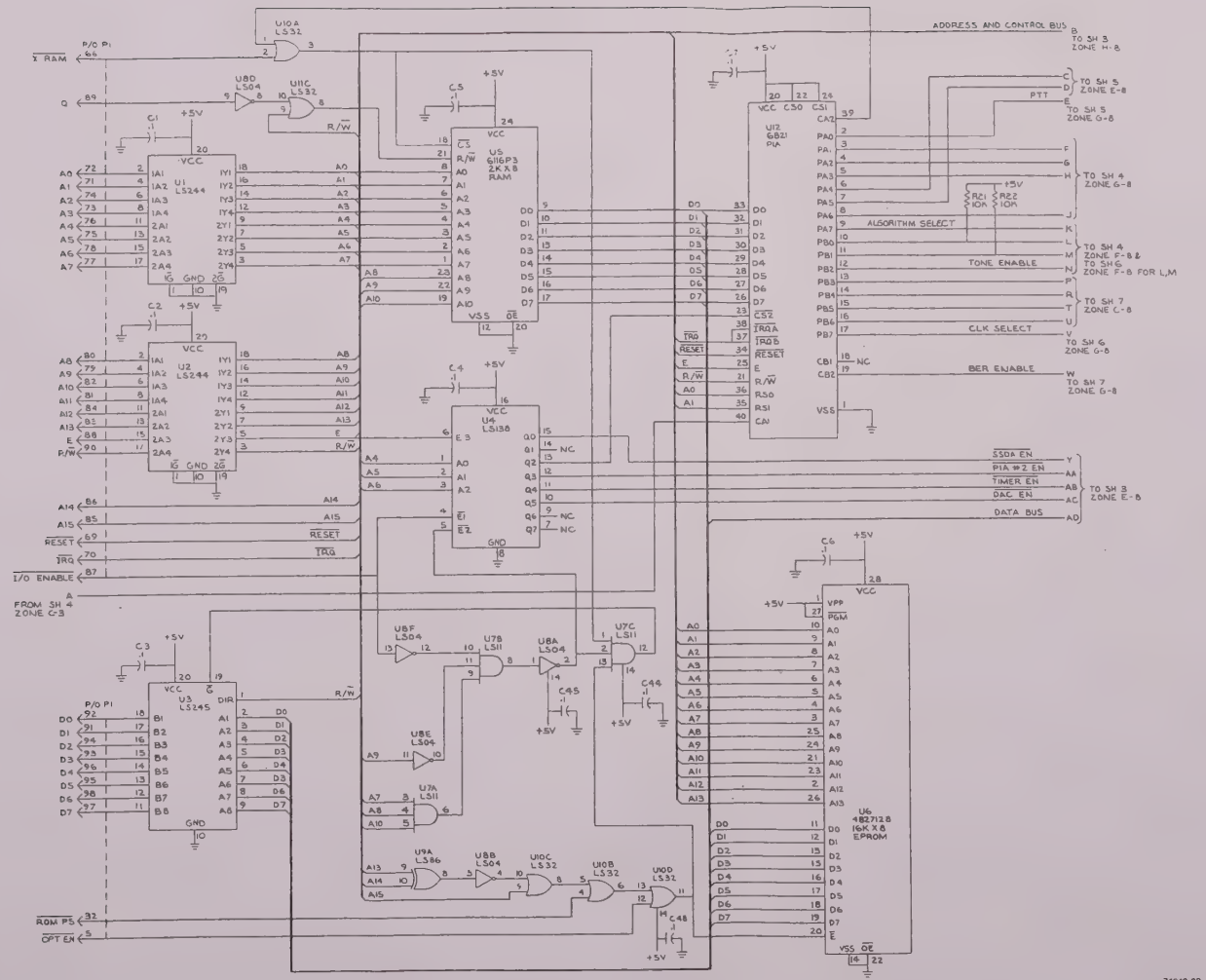


WARNING:
STATIC-SENSITIVE PARTS
HANDLE APPROPRIATELY

*Figure 22-2c. Schematic (sheet 3 of 7)*

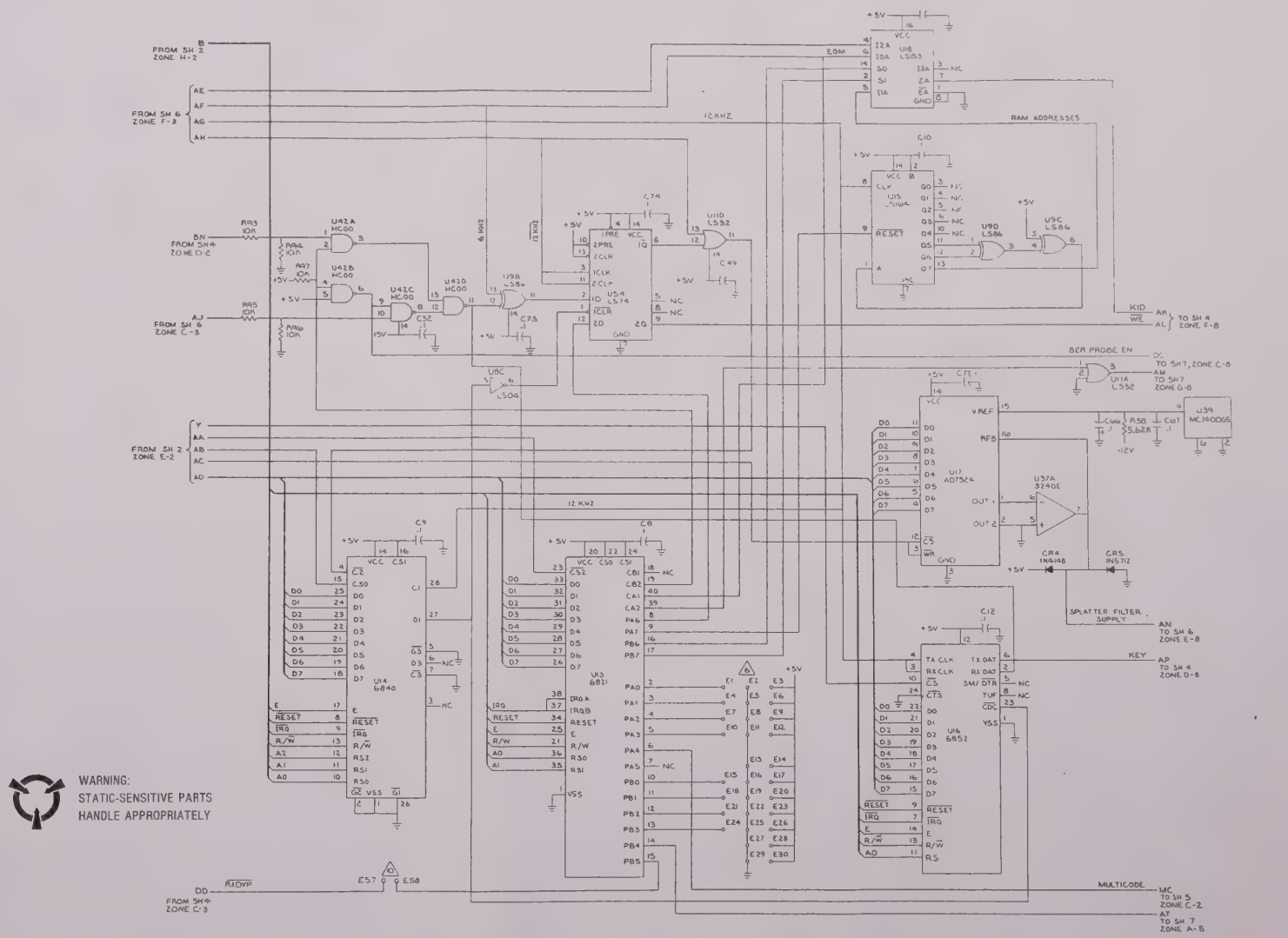

*Figure 22-2d. Schematic (sheet 4 of 7)*

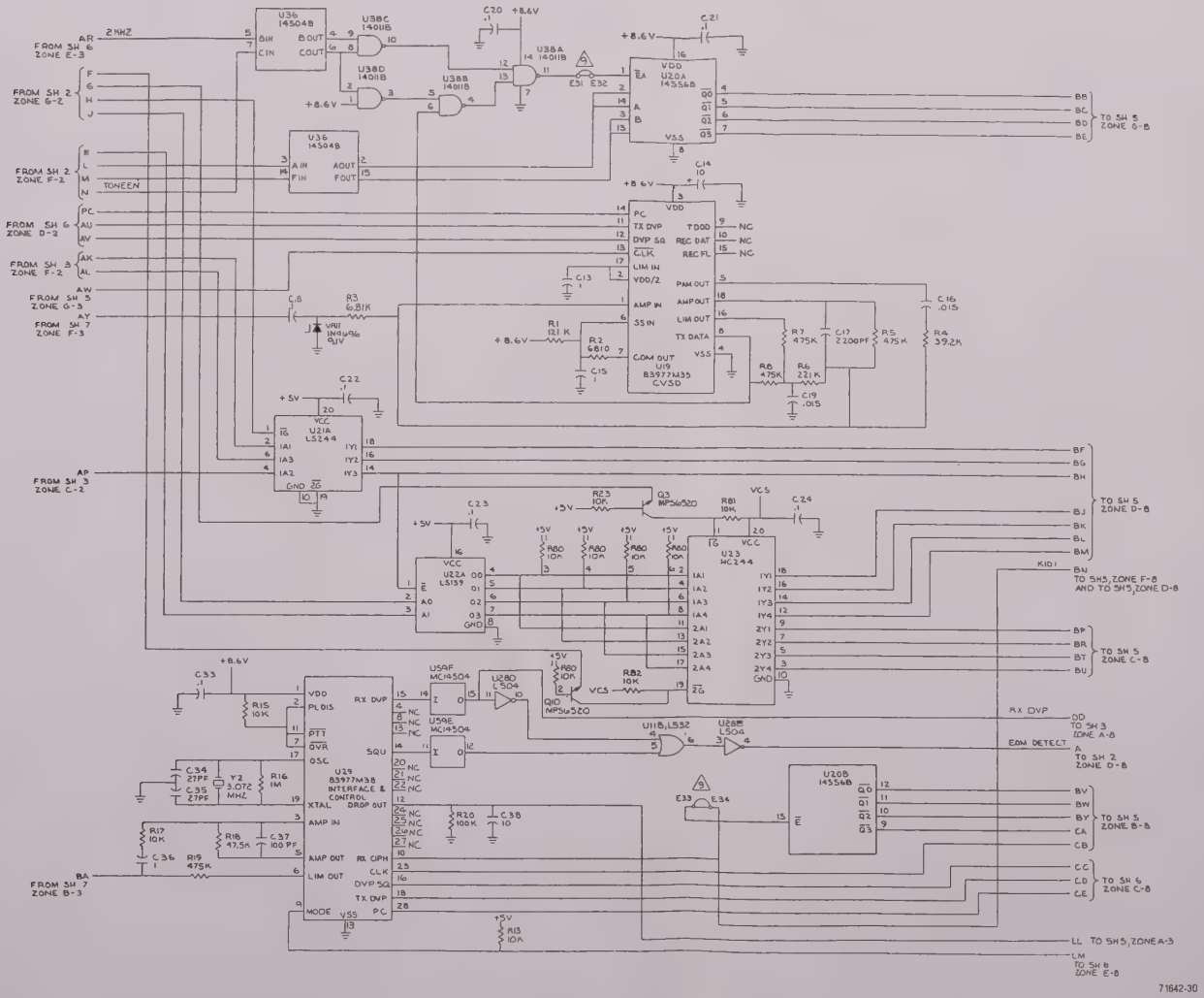


WARNING:
STATIC-SENSITIVE PARTS
HANDLE APPROPRIATELY

*Figure 22-2e. Schematic (sheet 5 of 7)*

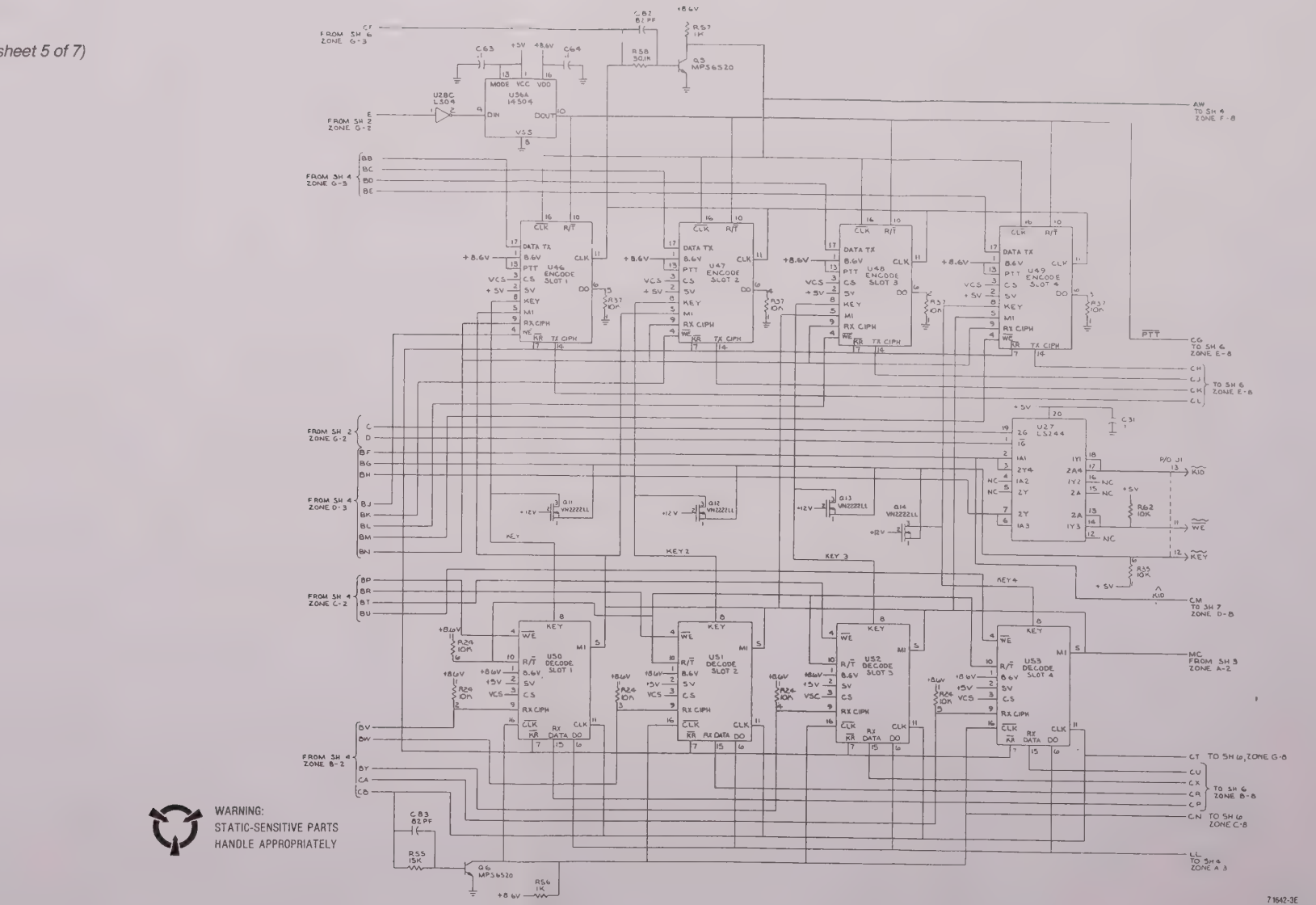

*Figure 22-2f. Schematic (sheet 6 of 7)*

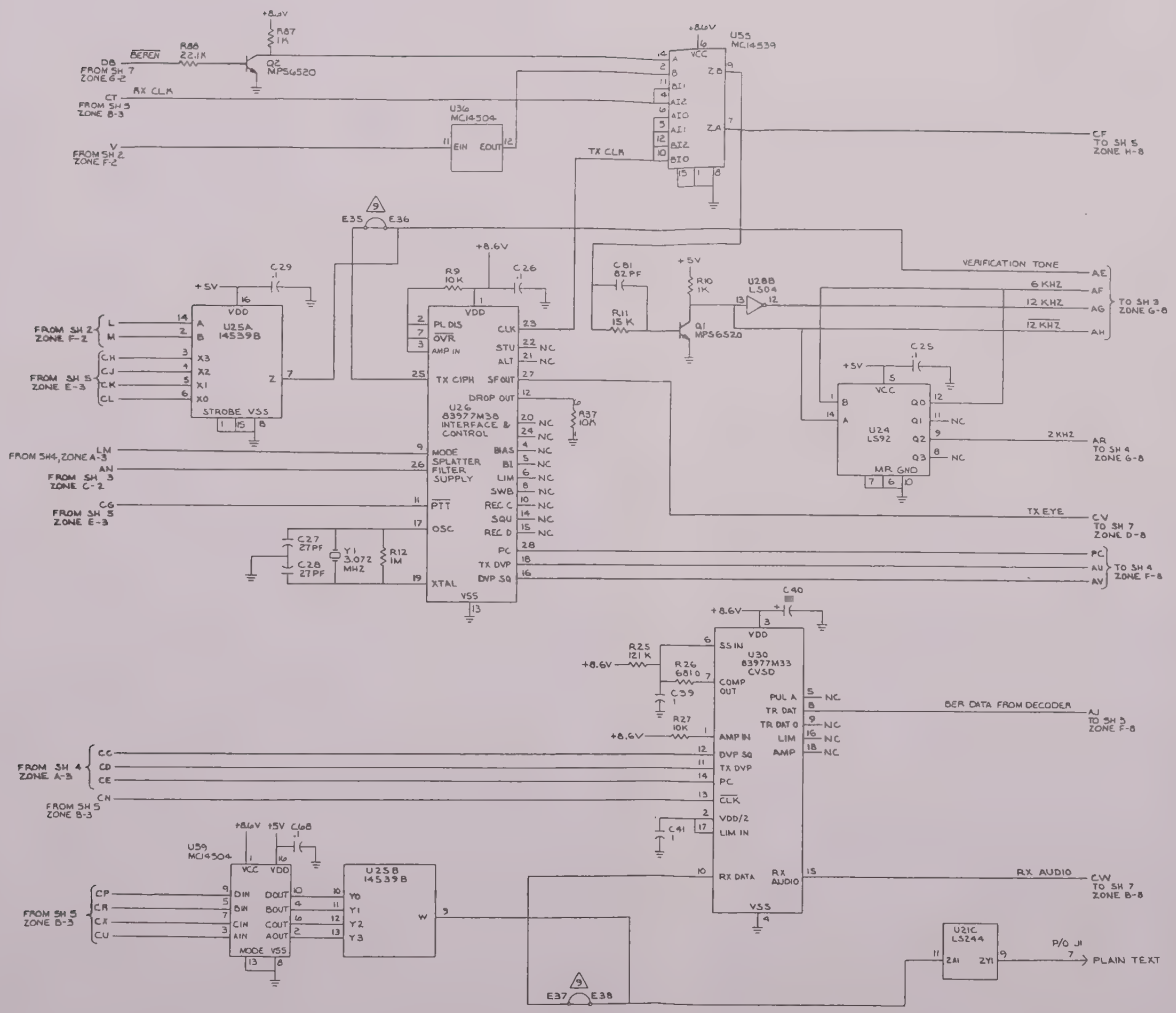


WARNING:
STATIC-SENSITIVE PARTS
HANDLE APPROPRIATELY

*Figure 22-2g. Schematic (sheet 7 of 7)*

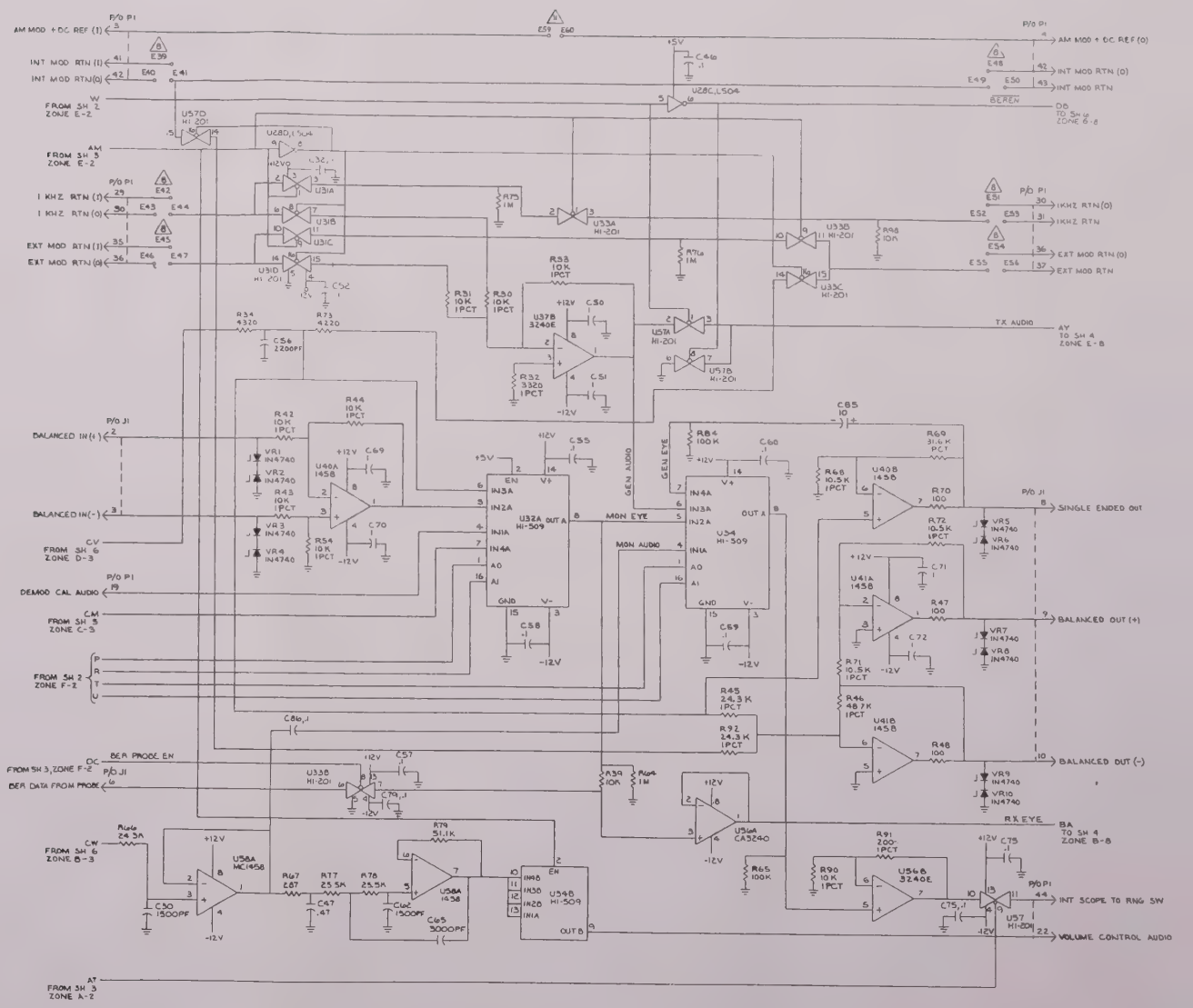

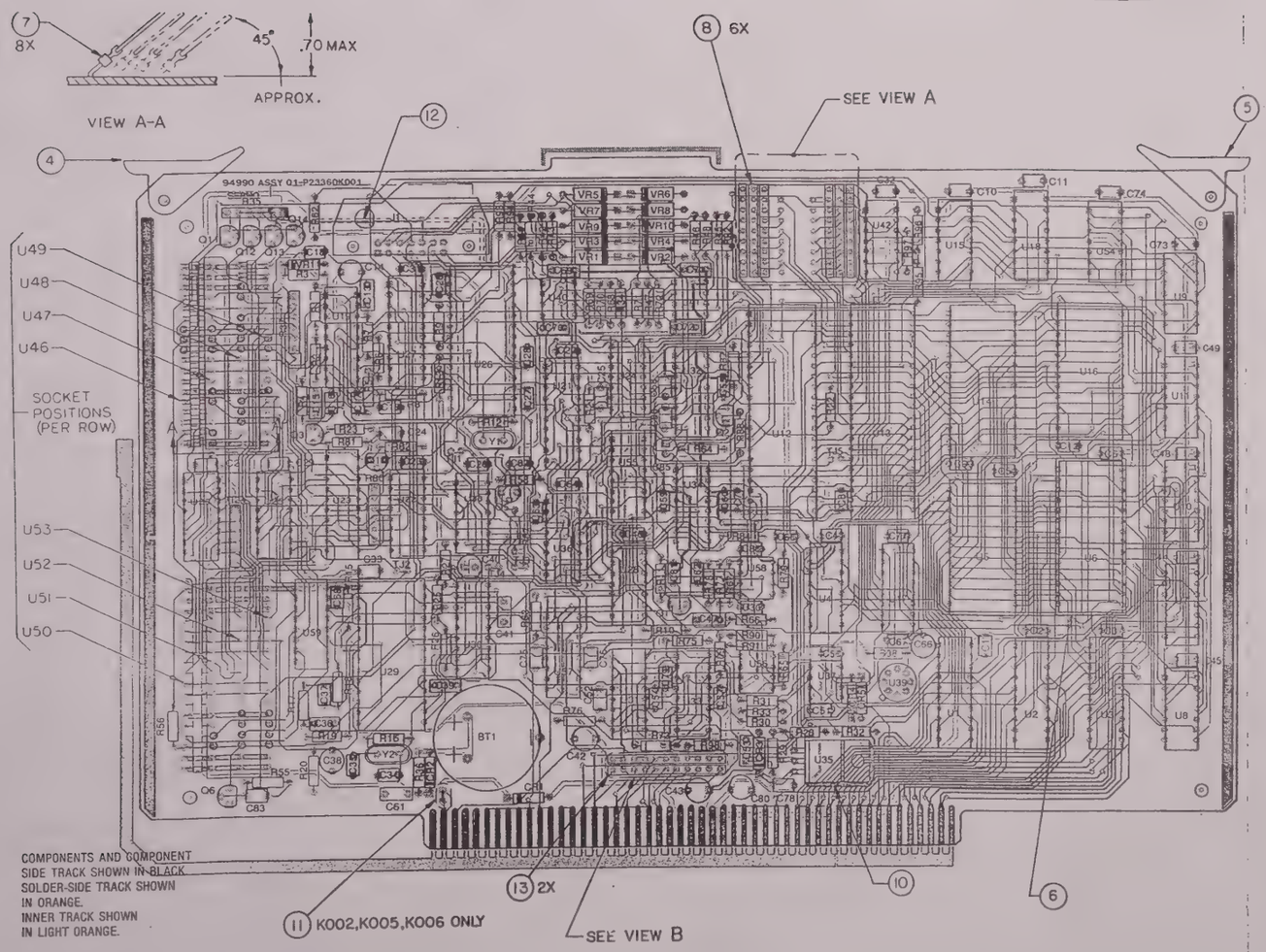


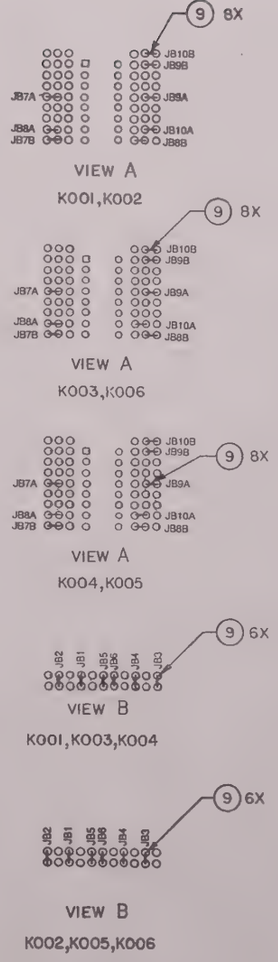


| Find No. | Qty. Req. | Part No. | Nomenclature | Part Value |
|---|---|---|---|---|
| 004 | 1 | 45-80839B28 | CARD EJECTOR | |
| 005 | 1 | 45-80375B63 | CARD EJECTOR, MARKED | |
| BT001 | 1 | 60-86372B86 | BATTERY | 3.6V NI-CAD |
| C 001 | 1 | 21-80342B10 | CAPACITOR | 1UF-20-50 |
| C 002 | 1 | 21-80342B10 | CAPACITOR | 1UF-20-50 |
| C 003 | 1 | 21-80342B10 | CAPACITOR | 1UF-20-50 |
| C 004 | 1 | 21-80342B10 | CAPACITOR | 1UF-20-50 |
| C 005 | 1 | 21-80342B10 | CAPACITOR | 1UF-20-50 |
| C 006 | 1 | 21-80342B10 | CAPACITOR | 1UF-20-50 |
| C 007 | 1 | 21-80342B10 | CAPACITOR | 1UF-20-50 |
| C 008 | 1 | 21-80342B10 | CAPACITOR | 1UF-20-50 |
| C 009 | 1 | 21-80342B10 | CAPACITOR | 1UF-20-50 |
| C 010 | 1 | 21-80342B10 | CAPACITOR | 1UF-20-50 |
| C 011 | 1 | 21-80342B10 | CAPACITOR | 1UF-20-50 |
| C 012 | 1 | 21-80342B10 | CAPACITOR | 1UF-20-50 |
| C 013 | 1 | 21-80342B45 | CAPACITOR | 1.0UF-20-50 |
| C 014 | 1 | 23-80341B15 | CAPACITOR | 1.0UF-20-25 |
| C 015 | 1 | 21-80342B46 | CAPACITOR | 1.0UF-20-50 |
| C 016 | 1 | 21-80342B34 | CAPACITOR | 015UF-20-50 |
| C 017 | 1 | 21-80370A24 | CAPACITOR | 2200PF-20-100 |
| C 018 | 1 | 21-80342B10 | CAPACITOR | 1UF-20-50 |
| C 019 | 1 | 21-80342B34 | CAPACITOR | 015UF-20-50 |
| C 020 | 1 | 21-80342B10 | CAPACITOR | 1UF 10-50 |
| C 021 | 1 | 21-80342B10 | CAPACITOR | 1UF-10-50 |
| C 022 | 1 | 21-80342B10 | CAPACITOR | 1UF-20-50 |
| C 023 | 1 | 21-80342B10 | CAPACITOR | 1UF-20-50 |
| C 024 | 1 | 21-80342B10 | CAPACITOR | 1UF-20-50 |
| C 025 | 1 | 21-80342B10 | CAPACITOR | 1UF-20-50 |
| C 026 | 1 | 21-80342B10 | CAPACITOR | 1UF-20-50 |
| C 027 | 1 | 21-80341B64 | CAPACITOR | 27PF-5-50 |
| C 028 | 1 | 21-80341B64 | CAPACITOR | 27PF-5-50 |
| C 029 | 1 | 21-80342B10 | CAPACITOR | 1UF-20-50 |
| C 030 | 1 | 21-80341B55 | CAPACITOR | 1300PF-5-50 |
| C 031 | 1 | 21-80342B10 | CAPACITOR | 1UF-20-50 |
| C 032 | 1 | 21-80342B10 | CAPACITOR | 1UF-20-50 |
| C 033 | 1 | 21-80342B10 | CAPACITOR | 1UF-20-50 |
| C 034 | 1 | 21-80341B64 | CAPACITOR | 27PF-5-50 |
| C 035 | 1 | 21-80341B64 | CAPACITOR | 27PF-5-50 |
| C 036 | 1 | 21-80342B46 | CAPACITOR | 1.0UF-20-50 |
| C 037 | 1 | 21-80341B45 | CAPACITOR | 100PF-5-50 |
| C 038 | 1 | 21-80341B15 | CAPACITOR | 10UF-20-50 |
| C 039 | 1 | 21-80342B46 | CAPACITOR | 1.0UF-20-50 |
| C 040 | 1 | 23-80341B15 | CAPACITOR | 10UF-20-50 |
| C 041 | 1 | 21-80342B46 | CAPACITOR | 1.0UF-20-50 |
| C 042 | 1 | 23-80341B15 | CAPACITOR | 10UF-20-50 |
| C 043 | 1 | 23-80341B15 | CAPACITOR | 10UF-20-50 |
| C 044 | 1 | 21-80342B10 | CAPACITOR | 1UF-20-50 |
| C 045 | 1 | 21-80342B10 | CAPACITOR | 1UF-20-50 |
| C 046 | 1 | 21-80342B10 | CAPACITOR | 1UF-20-50 |
| C 047 | 1 | 21-80342B45 | CAPACITOR | 47UF-10-50 |
| C 048 | 1 | 21-80342B10 | CAPACITOR | 1UF-20-50 |
| C 049 | 1 | 21-80342B10 | CAPACITOR | 1UF-20-50 |
| C 050 | 1 | 21-80342B46 | CAPACITOR | 1.0UF-20-50 |
| C 051 | 1 | 21-80342B46 | CAPACITOR | 1.0F-20-50 |
| C 052 | 1 | 21-80342B10 | CAPACITOR | 1UF-20-50 |
| C 053 | 1 | 21-80342B46 | CAPACITOR | 1.0UF-20-50 |
| C 054 | 1 | 21-80342B10 | CAPACITOR | 1UF-20-50 |
| C 055 | 1 | 21-80342B10 | CAPACITOR | 1UF-20-50 |
| C 056 | 1 | 21-80370A24 | CAPACITOR | 2200PF-20-50 |
| C 057 | 1 | 21-80342B10 | CAPACITOR | 1UF-20-50 |
| C 058 | 1 | 21-80342B10 | CAPACITOR | 1UF-20-50 |
| C 060 | 1 | 21-80342B10 | CAPACITOR | 1UF-20-50 |
| C 061 | 1 | 21-80342B46 | CAPACITOR | 1.0UF-20-50 |
| C 062 | 1 | 21-80341B55 | CAPACITOR | 150PF-5-50 |
| C 063 | 1 | 21-80342B10 | CAPACITOR | 1UF-20-50 |
| C 064 | 1 | 21-80342B10 | CAPACITOR | 1UF-20-50 |
| C 065 | 1 | 21-80341B57 | CAPACITOR | 3000PF-5-50 |
| C 066 | 1 | 23-80341B15 | CAPACITOR | 10UF-20-50 |
| C 067 | 1 | 21-80342B10 | CAPACITOR | 1UF-20-50 |
| C 068 | 1 | 21-80342B10 | CAPACITOR | 1UF-20-50 |
| C 069 | 1 | 21-80342B46 | CAPACITOR | 1.0UF-20-50 |
| C 070 | 1 | 21-80342B46 | CAPACITOR | 1.0UF-20-50 |
| C 071 | 1 | 21-80342B46 | CAPACITOR | 1.0UF-20-50 |
| C 072 | 1 | 21-80342B46 | CAPACITOR | 1.0UF-20-50 |
| C 073 | 1 | 21-80342B10 | CAPACITOR | 1UF-20-50 |
| C 074 | 1 | 21-80342B10 | CAPACITOR | 1UF-20-50 |
| C 075 | 1 | 21-80342B10 | CAPACITOR | 1UF-20-50 |
| C 076 | 1 | 21-80342B10 | CAPACITOR | 1UF-20-50 |
| C 077 | 1 | 21-80342B10 | CAPACITOR | 1UF-20-50 |
| C 078 | 1 | 21-80342B10 | CAPACITOR | 1UF-20-50 |
| C 079 | 1 | 21-80342B10 | CAPACITOR | 1UF-20-50 |

*Figure 22-3. Printed Wiring Board Assembly and Parts List*

*Figure 22-1. Block Diagram*

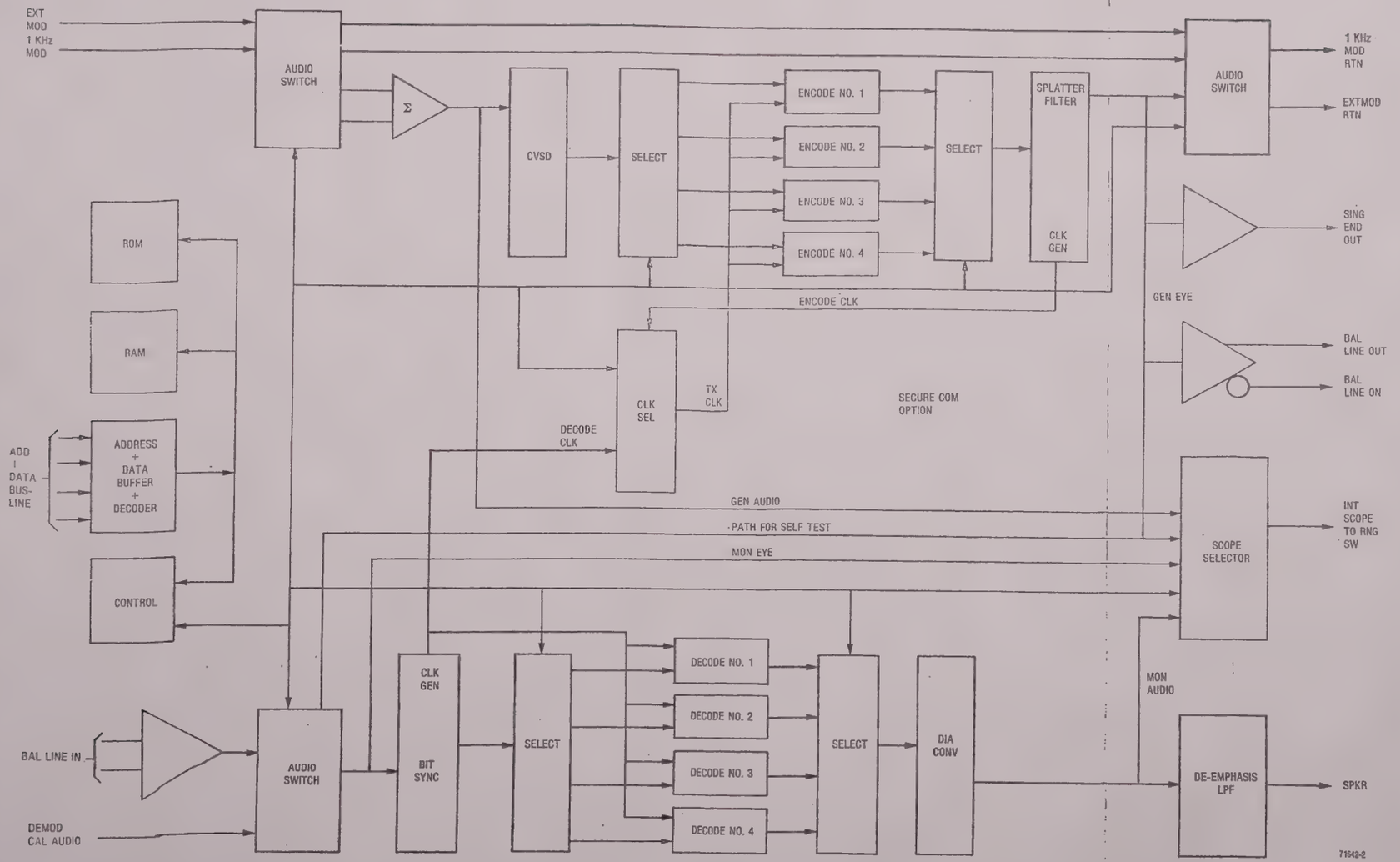

## SECURE COM OPTION (Cont)

| Find No. | Qty. Req. | Part No. | Nomenclature | Part Value |
|---|---|---|---|---|
| C 080 | 1 | 21-80342B10 | CAPACITOR | 10UF-20-25 |
| C 081 | 1 | 21-80372B88 | CAPACITOR | 82PF-5-50 |
| C 082 | 1 | 21-80372B88 | CAPACITOR | 82PF-5-50 |
| C 083 | 1 | 21-80372B88 | CAPACITOR | 82PF-5-50 |
| C 085 | 1 | 23-80341B15 | CAPACITOR | 10UF-20-25 |
| C 086 | 1 | 21-80342B10 | CAPACITOR | 1UF-20-50 |
| R 001 | 1 | 48-80396A27 | DIODE | |
| R 002 | 1 | 48-80396A27 | DIODE | |
| R 003 | 1 | 48-804483K01 | DIODE | |
| R 004 | 1 | 48-804483K01 | DIODE | |
| R 005 | 1 | 48-80396A27 | DIODE | |
| Q 001 | 1 | 48-80340B86 | TRANSISTOR | |
| Q 002 | 1 | 48-80340B86 | TRANSISTOR | |
| Q 003 | 1 | 48-80340B86 | TRANSISTOR | |
| Q 005 | 1 | 48-80340B86 | TRANSISTOR | |
| Q 006 | 1 | 48-80340B86 | TRANSISTOR | |
| Q 010 | 1 | 48-80340B86 | TRANSISTOR | |
| Q 011 | 1 | 48-80340B86 | TRANSISTOR | |
| Q 012 | 1 | 48-80340B86 | TRANSISTOR | |
| Q 013 | 1 | 48-80340B86 | TRANSISTOR | |
| Q 014 | 1 | 48-80340B86 | TRANSISTOR | |
| R 001 | 1 | 06-10621D96 | RESISTOR | 121K-1-1/4 |
| R 002 | 1 | 06-10621C75 | RESISTOR | 6.81K-1-1/4 |
| R 003 | 1 | 06-10621D49 | RESISTOR | 39.2K-1-1/4 |
| R 004 | 1 | 06-10621E54 | RESISTOR | 475K-1-1/4 |
| R 006 | 1 | 06-10621E22 | RESISTOR | 221K-1-1/4 |
| R 007 | 1 | 06-10621E54 | RESISTOR | 475K-1-1/4 |
| R 008 | 1 | 06-10621E54 | RESISTOR | 475K-1-1/4 |
| R 009 | 1 | 06-10621C91 | RESISTOR | 10K-1-1/4 |
| R 010 | 1 | 06-10621B94 | RESISTOR | 1K-1-1/4 |
| R 011 | 1 | 06-10621C12 | RESISTOR | 15K-1-1/4 |
| R 012 | 1 | 06-10621E85 | RESISTOR | 1M-5-1/4 |
| R 013 | 1 | 06-10621C91 | RESISTOR | 10K-1-1/4 |
| R 015 | 1 | 06-10621C91 | RESISTOR | 10K-1-1/4 |
| R 016 | 1 | 06-10621E85 | RESISTOR | 1M-1-1/4 |
| R 017 | 1 | 06-10621C91 | RESISTOR | 10K-1-1/4 |
| R 018 | 1 | 06-10621D57 | RESISTOR | 47.5K-1-1/4 |
| R 019 | 1 | 06-10621E54 | RESISTOR | 475K-1-1/4 |
| R 020 | 1 | 06-10621D86 | RESISTOR | 100K-1-1/4 |
| R 021 | 1 | 06-10621C91 | RESISTOR | 10K-1-1/4 |
| R 022 | 1 | 06-10621C91 | RESISTOR | 10K-1-1/4 |
| R 023 | 1 | 06-10621C91 | RESISTOR | 10K-1-1/4 |
| R 024 | 1 | 51-80370A89 | RESISTOR NETWORK | |
| R 025 | 1 | 06-10621D96 | RESISTOR | 121-1-1/4 |
| R 026 | 1 | 06-10621C75 | RESISTOR | 6.81K-1-1/4 |
| R 027 | 1 | 06-10621C91 | RESISTOR | 10K-1-1/4 |
| R 028 | 1 | 06-10621C12 | RESISTOR | 1.5K-1-1/4 |
| R 029 | 1 | 06-10621B40 | RESISTOR | 274K-1-1/4 |
| R 030 | 1 | 06-10621C91 | RESISTOR | 10K-1-1/4 |
| R 031 | 1 | 06-10621C91 | RESISTOR | 10K-1-1/4 |
| R 032 | 1 | 06-10621C45 | RESISTOR | 3.32K-1-1/4 |
| R 033 | 1 | 06-10621C91 | RESISTOR | 10K-1-1/4 |
| R 034 | 1 | 06-10621C56 | RESISTOR | 4.32K-1-1/4 |
| R 035 | 1 | 51-80370A89 | RESISTOR NETWORK | |
| R 036 | 1 | 06-10621C38 | RESISTOR | 2.8K-1-1/4 |
| R 037 | 1 | 51-80370A89 | RESISTOR NETWORK | |
| R 038 | 1 | 06-10621C67 | RESISTOR | 5.62K-1-1/4 |
| R 039 | 1 | 06-10621C91 | RESISTOR | 10K-1-1/4 |
| R 042 | 1 | 06-10621C91 | RESISTOR | 10K-1-1/4 |
| R 043 | 1 | 06-10621C91 | RESISTOR | 10K-1-1/4 |
| R 044 | 1 | 06-10621C91 | RESISTOR | 10K-1-1/4 |
| R 045 | 1 | 06-10621D29 | RESISTOR | 2.43K-1-1/4 |
| R 046 | 1 | 06-10621D58 | RESISTOR | 48.7K-1-1/4 |
| R 047 | 1 | 06-10621A97 | RESISTOR | 100-1-1/4 |
| R 048 | 1 | 06-10621A97 | RESISTOR | 100-1-1/4 |
| R 054 | 1 | 06-10621C91 | RESISTOR | 10K-1-1/4 |
| R 055 | 1 | 06-10621C12 | RESISTOR | 15K-1-1/4 |
| R 056 | 1 | 06-10621B94 | RESISTOR | 1K-1-1/4 |
| R 057 | 1 | 06-10621B94 | RESISTOR | 1K-1-1/4 |
| R 058 | 1 | 06-10621D38 | RESISTOR | 30.1K-1-1/4 |
| R 062 | 1 | 06-10621C91 | RESISTOR | 10K-1-1/4 |
| R 063 | 1 | 06-10621E85 | RESISTOR | 1M-1-1/4 |
| R 064 | 1 | 06-10621E85 | RESISTOR | 1M-1-1/4 |
| R 065 | 1 | 06-10621D88 | RESISTOR | 100K-1-1/4 |
| R 066 | 1 | 06-10621D29 | RESISTOR | 24.3K-1-1/4 |
| R 067 | 1 | 06-10621B42 | RESISTOR | 287-1-1/4 |
| R 068 | 1 | 06-10621C93 | RESISTOR | 10.5K-1-1/4 |
| R 069 | 1 | 06-10621D40 | RESISTOR | 31.6K-1-1/4 |
| R 070 | 1 | 06-10621A97 | RESISTOR | 100-1-1/4 |
| R 071 | 1 | 06-10621C93 | RESISTOR | 10.5K-1-1/4 |
| R 072 | 1 | 06-10621C93 | RESISTOR | 10.5K-1-1/4 |
| R 073 | 1 | 06-10621C55 | RESISTOR | 4.22K-1-1/4 |

| Find No. | Qty. Req. | Part No. | Nomenclature | Part Value |
|---|---|---|---|---|
| R 075 | 1 | 06-10621E85 | RESISTOR | 1M-1-1/4 |
| R 076 | 1 | 06-10621E985 | RESISTOR | 1M-1-1/4 |
| R 077 | 1 | 06-10621D31 | RESISTOR | 25.5K-1-1/4 |
| R 078 | 1 | 06-10621D31 | RESISTOR | 25.5K-1-1/4 |
| R 079 | 1 | 06-10621D60 | RESISTOR | 51.1K-1-1/4 |
| R 080 | 1 | 51-80370A89 | RESISTOR NETWORK | |
| R 081 | 1 | 06-10621C91 | RESISTOR | 10K-1-1/4 |
| R 082 | 1 | 06-10621C91 | RESISTOR | 10K-1-1/4 |
| R 084 | 1 | 06-10621D88 | RESISTOR | 100K-1-1/4 |
| R 087 | 1 | 06-10621B94 | RESISTOR | 1K-1-1/4 |
| R 088 | 1 | 06-10621D25 | RESISTOR | 22.1K-1-1/4 |
| R 090 | 1 | 06-10621C91 | RESISTOR | 10K-1-1/4 |
| R 091 | 1 | 06-10621B29 | RESISTOR | 200-1-1/4 |
| R 092 | 1 | 06-10621D29 | RESISTOR | 24.3K-1-1/4 |
| R 093 | 1 | 06-10621C91 | RESISTOR | 10K-1-1/4 |
| R 094 | 1 | 06-10621C91 | RESISTOR | 10K-1-1/4 |
| R 095 | 1 | 06-10621C91 | RESISTOR | 10K-1-1/4 |
| R 096 | 1 | 06-10621C91 | RESISTOR | 10K-1-1/4 |
| R 097 | 1 | 06-10621C91 | RESISTOR | 10K-1-1/4 |
| R 098 | 1 | 06-10621C91 | RESISTOR | 10K-1-1/4 |
| U 001 | 1 | 51-82609M56 | INTEGRATED CIRCUIT | |
| U 002 | 1 | 51-82609M56 | INTEGRATED CIRCUIT | |
| U 003 | 1 | 51-82609M57 | INTEGRATED CIRCUIT | |
| U 004 | 1 | 51-84561L41 | INTEGRATED CIRCUIT | |
| U 005 | 1 | 51-80339B86 | INTEGRATED CIRCUIT | |
| U 006 | 1 | 51-80339B89 | INTEGRATED CIRCUIT | |
| U 007 | 1 | 51-84561L44 | INTEGRATED CIRCUIT | |
| U 008 | 1 | 51-84561L03 | INTEGRATED CIRCUIT | |
| U 009 | 1 | 51-82609M79 | INTEGRATED CIRCUIT | |
| U 010 | 1 | 51-84561L36 | INTEGRATED CIRCUIT | |
| U 011 | 1 | 51-84561L36 | INTEGRATED CIRCUIT | |
| U 012 | 1 | 51-82807K20 | INTEGRATED CIRCUIT | |
| U 013 | 1 | 51-82807K20 | INTEGRATED CIRCUIT | |
| U 014 | 1 | 51-82848M44 | INTEGRATED CIRCUIT | |
| U 015 | 1 | 51-80370A85 | INTEGRATED CIRCUIT | |
| U 016 | 1 | 51-82807K10 | INTEGRATED CIRCUIT | |
| U 017 | 1 | 51-80372B96 | INTEGRATED CIRCUIT | |
| U 018 | 1 | 51-80370A84 | INTEGRATED CIRCUIT | |
| U 019 | 1 | 51-83977M33 | INTEGRATED CIRCUIT | |
| U 020 | 1 | 51-80370A81 | INTEGRATED CIRCUIT | |
| U 021 | 1 | 51-82609M56 | INTEGRATED CIRCUIT | |
| U 022 | 1 | 51-84561242 | INTEGRATED CIRCUIT | |
| U 023 | 1 | 51-82609M56 | INTEGRATED CIRCUIT | |
| U 024 | 1 | 51-80370A87 | INTEGRATED CIRCUIT | |
| U 025 | 1 | 51-80370A80 | INTEGRATED CIRCUIT | |
| U 026 | 1 | 51-83977M38 | INTEGRATED CIRCUIT | |
| U 027 | 1 | 51-82609M56 | INTEGRATED CIRCUIT | |
| U 028 | 1 | 51-84561L03 | INTEGRATED CIRCUIT | |
| U 029 | 1 | 51-83977M38 | INTEGRATED CIRCUIT | |
| U 030 | 1 | 51-83977M33 | INTEGRATED CIRCUIT | |
| U 031 | 1 | 51-80345A05 | INTEGRATED CIRCUIT | |
| U 032 | 1 | 51-80372B97 | INTEGRATED CIRCUIT | |
| U 033 | 1 | 51-80345A05 | INTEGRATED CIRCUIT | |
| U 034 | 1 | 51-80372B97 | INTEGRATED CIRCUIT | |
| U 035 | 1 | 51-80370A78 | INTEGRATED CIRCUIT | |
| U 036 | 1 | 51-80372B85 | INTEGRATED CIRCUIT | |
| U 037 | 1 | 51-80345A04 | INTEGRATED CIRCUIT | |
| U 038 | 1 | 51-05596E46 | INTEGRATED CIRCUIT | |
| U 039 | 1 | 51-80370A79 | INTEGRATED CIRCUIT | |
| U 040 | 1 | 51-80370A82 | INTEGRATED CIRCUIT | |
| U 041 | 1 | 51-80370A82 | INTEGRATED CIRCUIT | |
| U 042 | 1 | 51-84561L04 | INTEGRATED CIRCUIT | |
| U 054 | 1 | 51-83627M93 | INTEGRATED CIRCUIT | |
| U 055 | 1 | 51-80370A80 | INTEGRATED CIRCUIT | |
| U 056 | 1 | 51-80345A04 | INTEGRATED CIRCUIT | |
| U 057 | 1 | 51-80345A05 | INTEGRATED CIRCUIT | |
| U 058 | 1 | 51-80370A82 | INTEGRATED CIRCUIT | |
| U 059 | 1 | 51-80372B85 | INTEGRATED CIRCUIT | |
| VR001 | 1 | 48-80372B95 | DIODE 10V | |
| VR002 | 1 | 48-80372B95 | DIODE 10V | |
| VR003 | 1 | 48-80372B95 | DIODE 10V | |
| VR004 | 1 | 48-80372B95 | DIODE 10V | |
| VR005 | 1 | 48-80372B95 | DIODE 10V | |
| VR006 | 1 | 48-80372B95 | DIODE 10V | |
| VR007 | 1 | 48-80372B95 | DIODE 10V | |
| VR008 | 1 | 48-80372B95 | DIODE 10V | |
| VR009 | 1 | 48-80372B95 | DIODE 10V | |
| VR010 | 1 | 48-80372B95 | DIODE 10V | |
| VR011 | 1 | 48-80372B94 | DIODE 9.1V | |
| Y 001 | 1 | 48-80372B92 | CRYSTAL 3.072 MHz | |
| Y 002 | 1 | 48-80372B92 | CRYSTAL 3.072 MHz | |

The voltage pre-regulator provides a 7.5V reference which can be turned off to disable the synthesizer. The 7.5V is then regulated to 4.6 volts, which is used by the VCO (U25), and to +5 volts, which is used by U26, U27, and U28.

A 12.8 MHz reference is generated by the oscillator IC (U27). The control channel data is also modulated onto the output by the reference oscillator.

The phase locked loop IC (PLL) (U28) provides digital dividers, phase frequency detector, loop filter, and a lock detect output on one IC. The PLL IC compares the reference frequency to the divider frequency from the VCO IC in order to generate an error voltage. The frequency of the loop is set by programming internal registers of the PLL IC using the PIA (U9). The output frequency before the frequency doubler is programmed as follows:

$$f(out) = (127N + A) * 6250\ Hz$$

The voltage controlled oscillator (VCO) (U25) uses the error voltage supplied by the PLL IC to generate an output frequency range of 425.5−435 MHz. Control channel data is also modulated onto the output frequency at the VCO. The output frequency of the VCO is then doubled to the desired frequency range, 851-870 MHz, by the frequency multiplier (U26).

*Figure 23-1. Block Diagram*

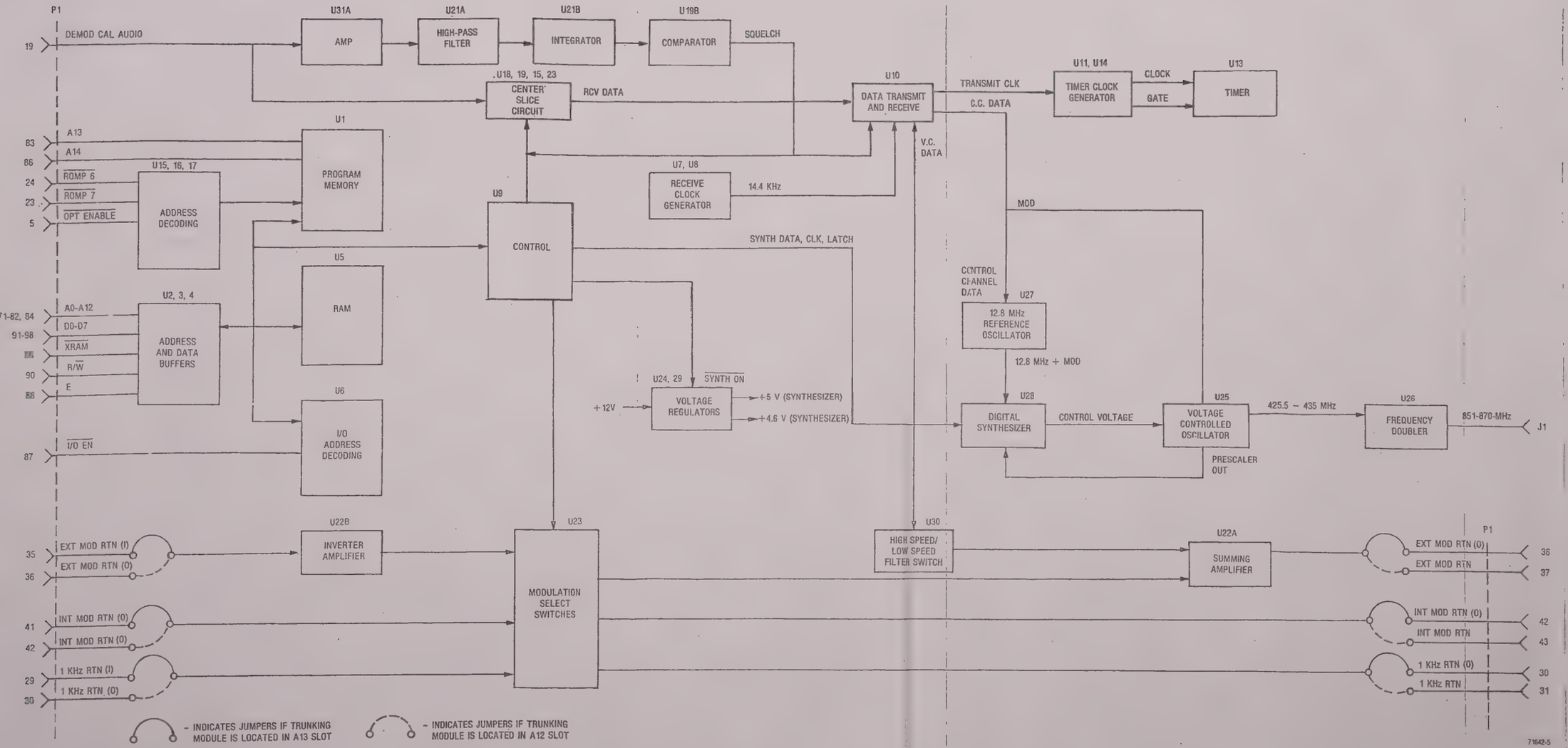

*Figure 23-2a. Schematic (sheet 1 of 5)*

NOTES

1. PARTIAL REFERENCE DESIGNATIONS ARE SHOWN. FOR COMPLETE DESIGNATIONS PREFIX WITH 1A12
2. FOR REFERENCE DRAWINGS REFER TO
   ASSEMBLY 01-P29000H
   MODULE TEST PROCEDURE 12-P29013H
   MODULE SPEC 12-P29014H
   SYSTEM TEST PROCEDURE 12 P23331K
3. UNLESS OTHERWISE SPECIFIED
   ALL RESISTORS ARE IN OHMS, ±5 PCT 1/4 WATT
   ALL CAPACITORS ARE IN UF
   ALL VOLTAGES ARE DC
4. DEVICE TYPE NUMBERS AND CONNECTIONS NOT SHOWN ON SYMBOL ARE LISTED BELOW. UNDERLINED PORTION OF TYPE NUMBER IS USED AS A CODE TO IDENTIFY DEVICES ON DIAGRAM
5. BOARD IS LAYED OUT TO NORMALLY BE PLUGGED INTO A13 SLOT. HOWEVER, IT MAY BE MADE COMPATIBLE WITH THE A12 SLOT BY CUTTING TRACK BETWEEN E3 AND E4, E8 AND E7, E9 AND E10, E12 AND E3, E14 AND E8, E16 AND E11 THEN ADD JUMPERS FROM E4 TO E5, E7 TO E8, E10 TO E11, E12 TO E13, E14 TO E15, E16 TO E17

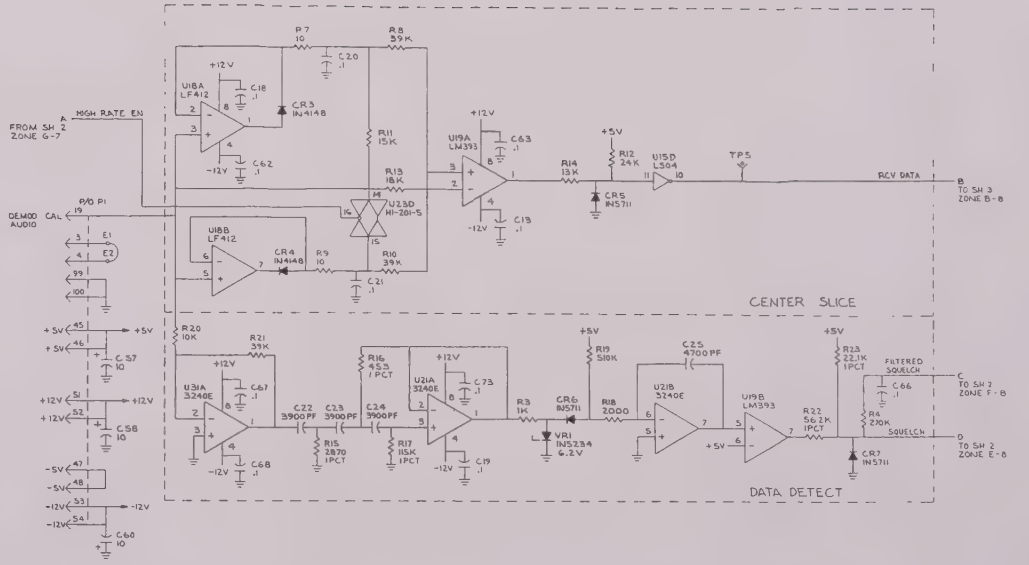


| REFERENCE DESIGNATIONS | |
|---|---|
| HIGHEST NUMBER USED | NOT USED |
| C73 | C3 C59 C69 C70 |
| CR7 | |
| E17 | |
| J2 | |
| K1 | |
| L1 | |
| Q2 | |
| RS1 | R48 R49 |
| TP5 | |
| U31 | U12 |
| VR1 | |

| REF DES | TYPE ⚠4 | VCC | GND | NO CONN |
|---|---|---|---|---|
| U1 | 27256 | | 14, 22 | |
| U2, U3 | 74LS244 | - | 10 | - |
| U4 | 74LS245 | | 10 | - |
| U5 | HM6116P3 | | 12, 20 | |
| U6 | 74LS138 | | - | 12, 13, 14, 15 |
| U7 | EXO-2 | | - | 1, 5, 6, 7 |
| U8 | 74HC4040 | | 11 | 1, 2, 3, 4, 5, 8, 7, 9, 12, 14, 15 |
| U9 | 6821 | - | - | - |
| U10 | 6530 | - | | 6, 10, 14, 16, 17, 23, 24, 30 |
| U11 | 74LS74 | - | 7 | - |
| U13 | 6840 | | - | 3, 8, 27 |
| U14 | 74LS390 | | 8 | 5, 6, 10, 11 |
| U15 | 74LS04 | - | 7 | - |
| U16 | 74LS32 | - | 7 | - |
| U17 | 74LS00 | - | 7 | - |

| REF DES | TYPE ⚠4 | VCC | GND | NO CONN |
|---|---|---|---|---|
| U18 | LF412CN/A + | - | - | |
| U19 | LM393 | - | - | |
| U20 | 74LS30 | | 7 | 9, 10, 13 |
| U21, U22, U31 | CA3240E | - | | - |
| U23 | HI-201 5 | | 5 | 12 |
| U24 | LM317 | - | | |
| U25 | 5IRO57061 79 | | - | 2, 6, 7, 9 10 |
| U26 | 5IRO57061 76 | - | | 3, 5, 7 |
| U27 | XXN1122AA | - | - | 4, 5, 6, 10, 11, 13 |
| U28 | 5IRO57081 80 | | - | 5, 12 |
| U29 | 5IRO57061 87 | - | - | 3, 7 |
| U30 | MC14053 | | - | 1, 2, 3, 4, 5, 15 |

WARNING:
STATIC-SENSITIVE PARTS
HANDLE APPROPRIATELY

7 1642-6A

*Figure 23-2b. Schematic (sheet 2 of 5)*

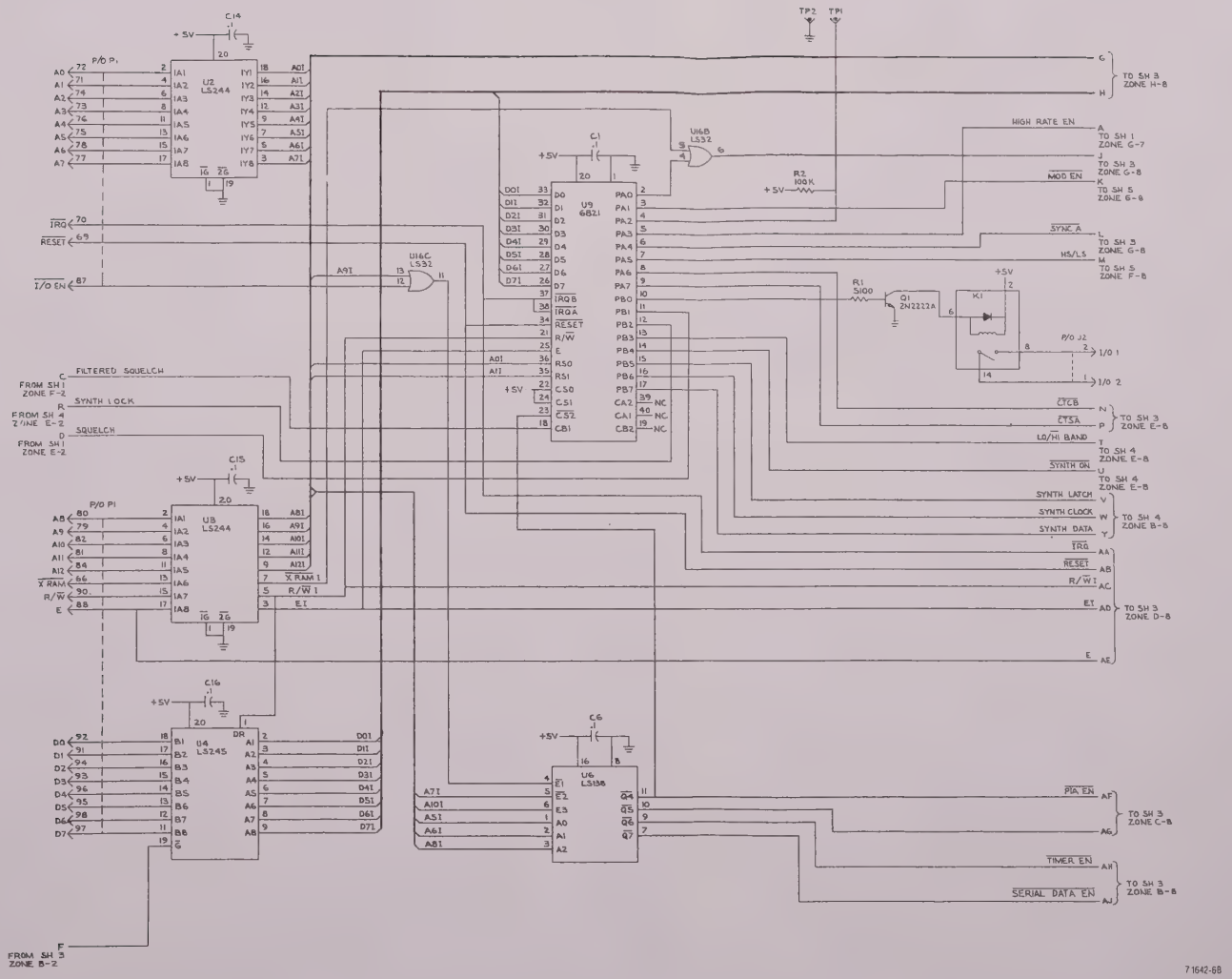

*Figure 23-2b. Schematic (sheet 2 of 5)*

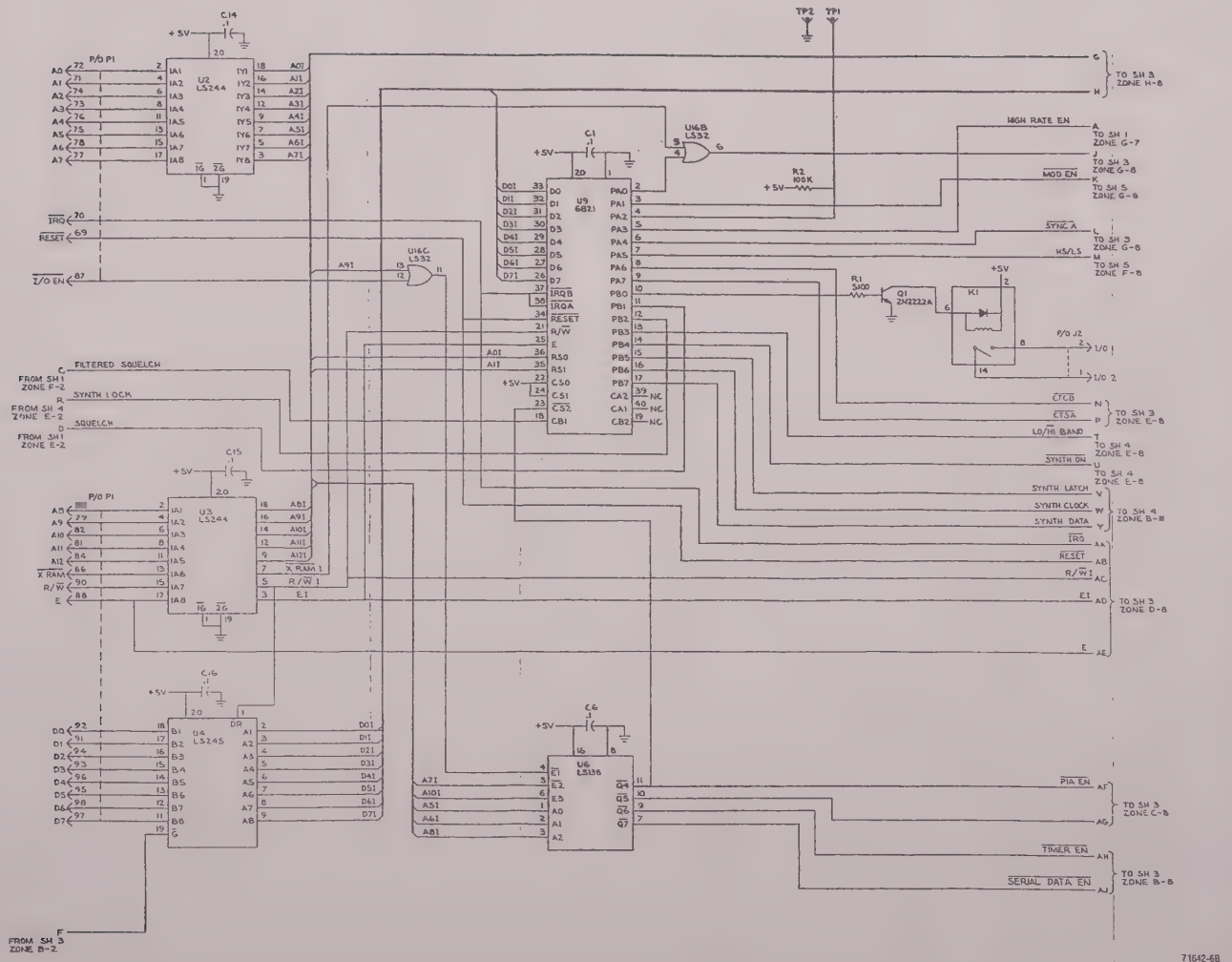

## TRUNKED RADIO TEST OPTION

*Figure 23-2c. Schematic (sheet 3 of 5)*

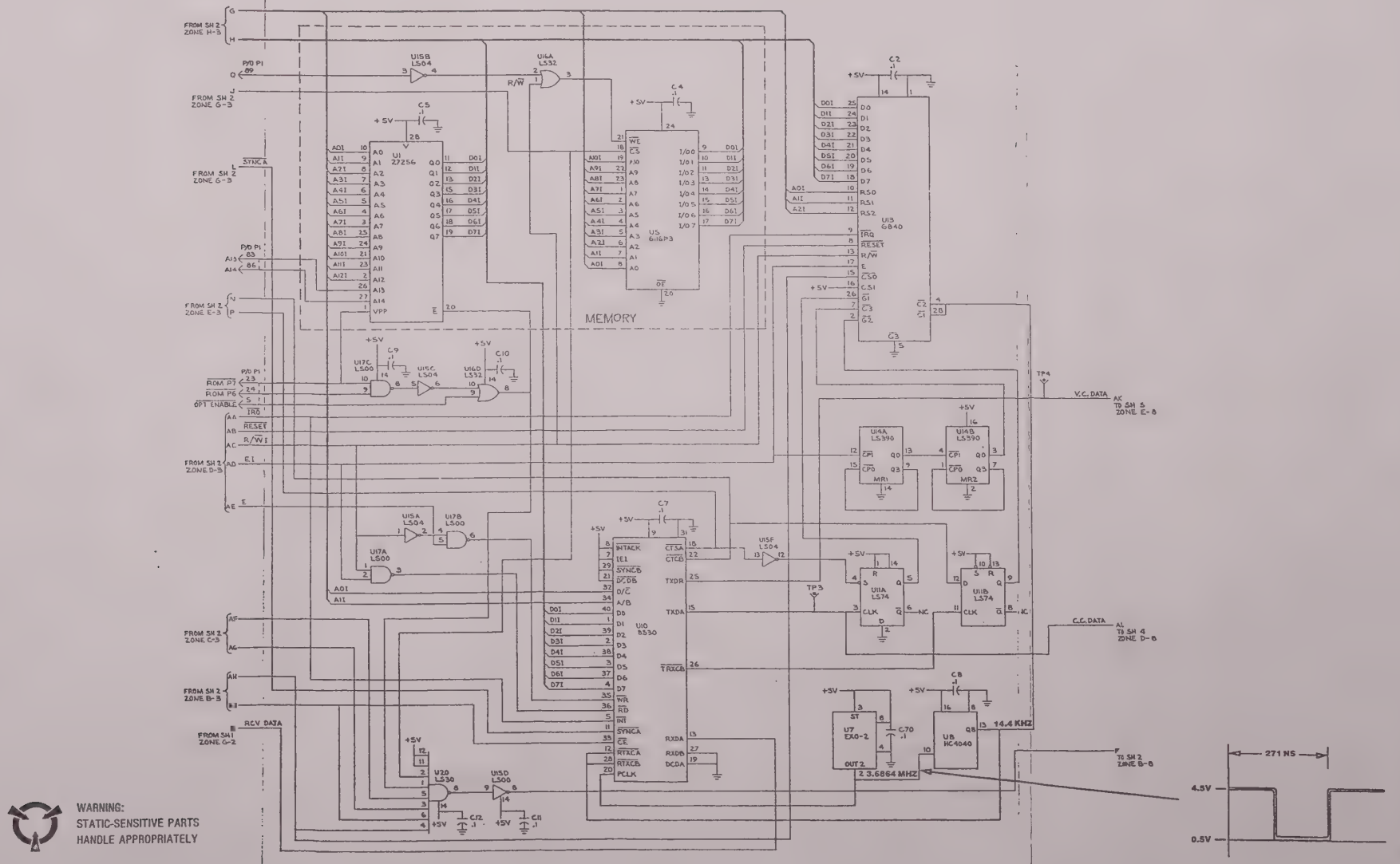

*Figure 23-2d. Schematic (sheet 4 of 5)*

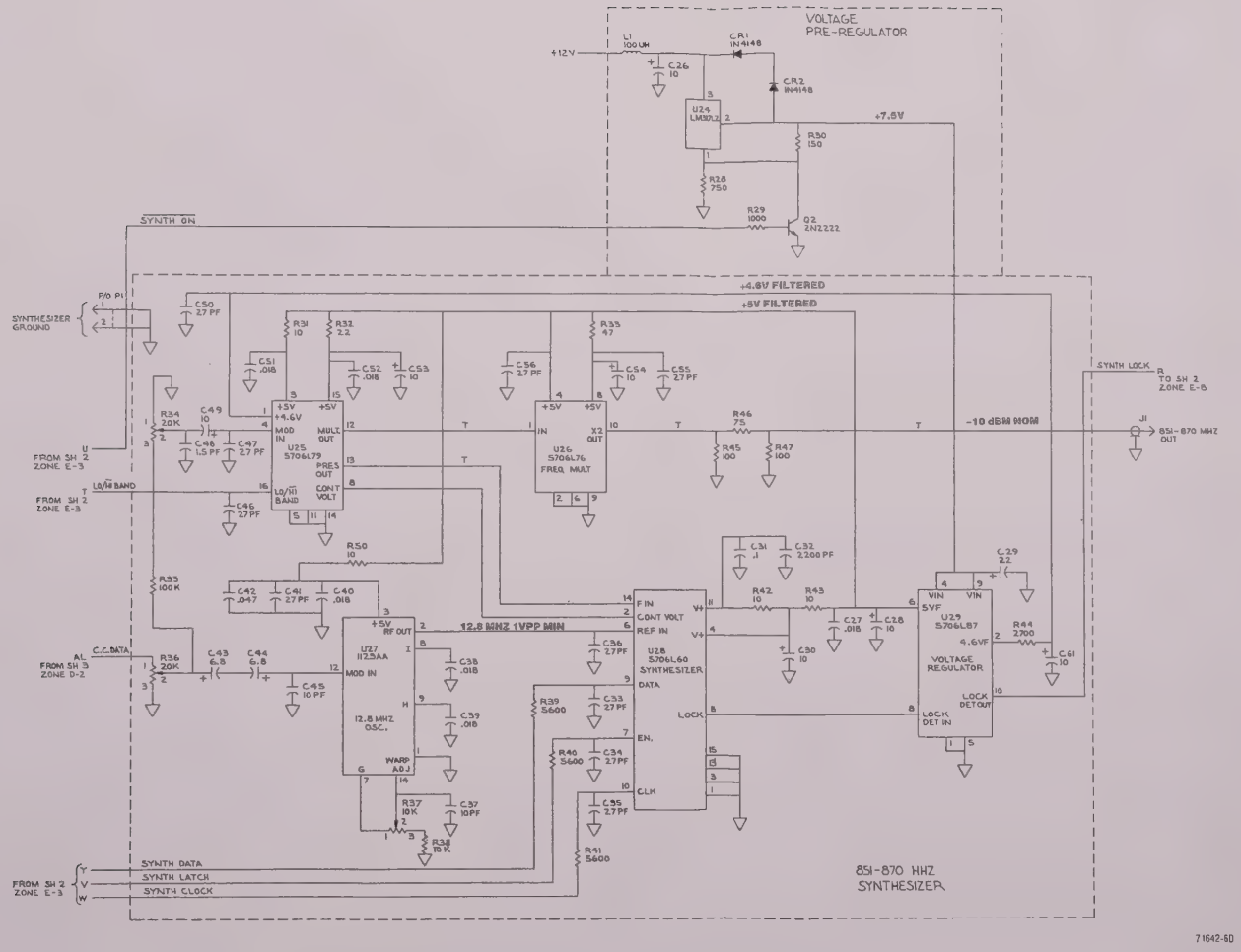


WARNING:
STATIC-SENSITIVE PARTS
HANDLE APPROPRIATELY

*Figure 23-2e. Schematic (sheet 5 of 5)*

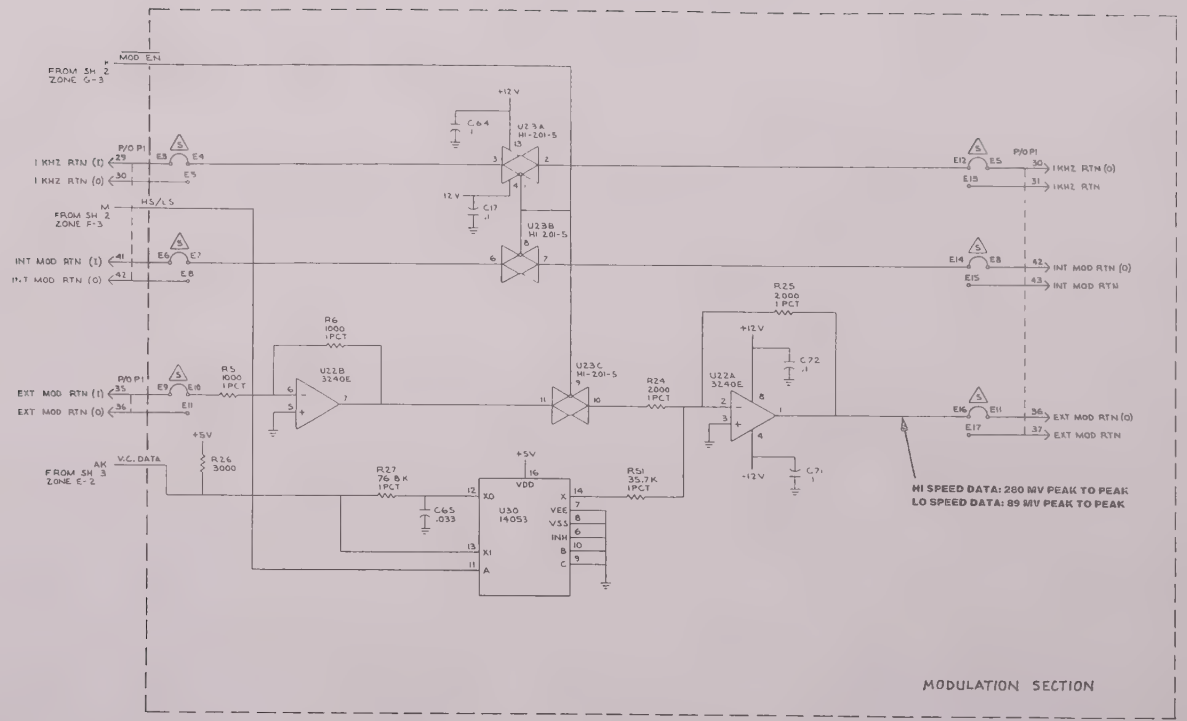


WARNING:
STATIC-SENSITIVE PARTS
HANDLE APPROPRIATELY

71642-6E

*Figure 23-3. Printed Wiring Board Assembly and Parts List*

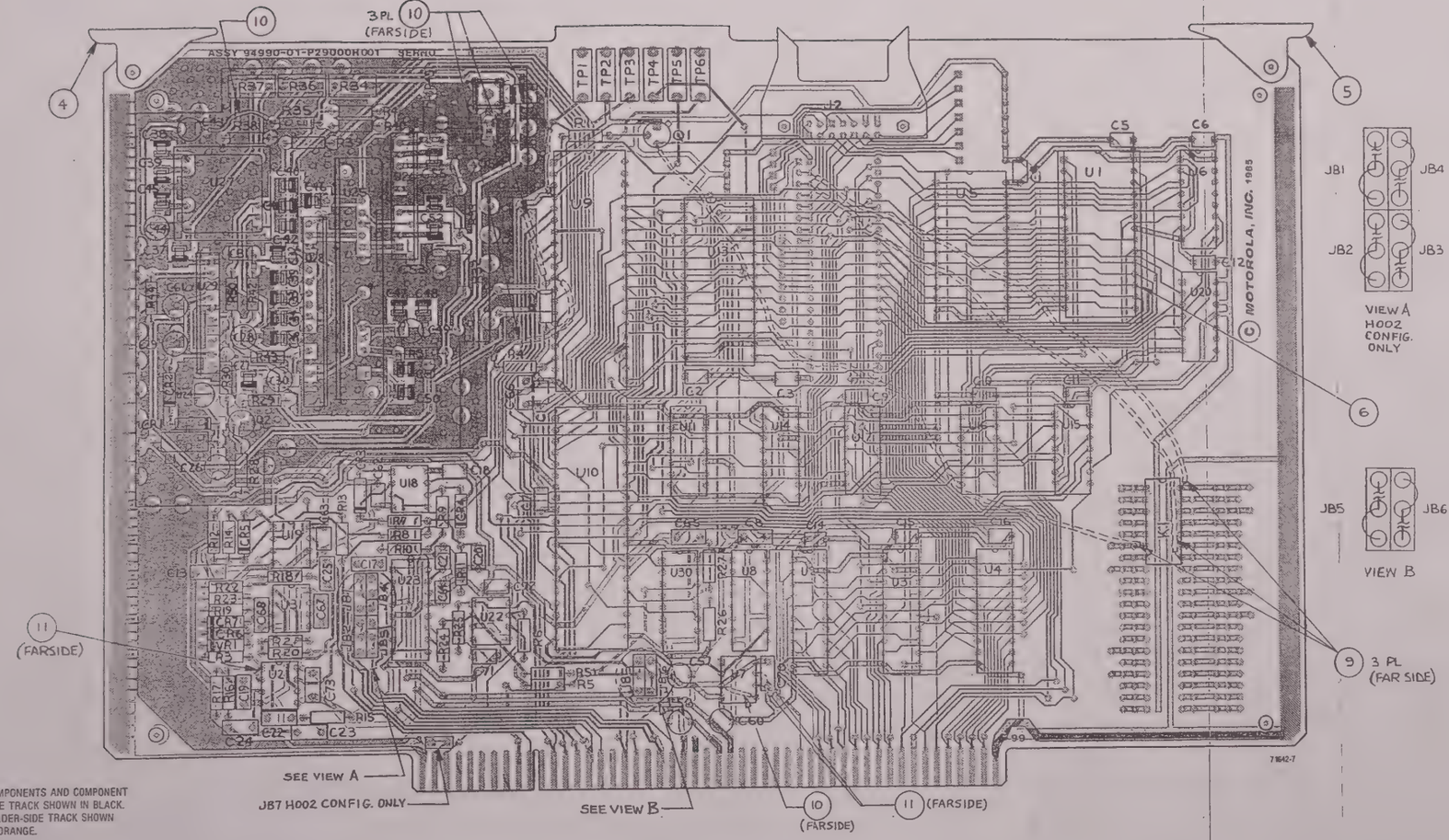


COMPONENTS AND COMPONENT SIDE TRACK SHOWN IN BLACK. SOLDER-SIDE TRACK SHOWN IN ORANGE.



| Find No. | Qty. Req. | Part No. | Nomenclature | Part Value |
|---|---|---|---|---|
| 004 | 1 | 45-80339B28 | CARD EJECTOR | |
| 005 | 1 | 45-80375B62 | CARD EJECTOR MARKED | |
| 018 | 2 | 03-139749 | SCREW | 0850-56X.188 |
| 019 | 2 | 04-400139 | WASHER | 086 |
| 020 | 2 | 04-80375B52 | WASHER | 086 |
| C 001 | 1 | 21-80342B10 | CAPACITOR | 1UF-20-50 |
| C 002 | 1 | 21-80342B10 | CAPACITOR | 1UF-20-50 |
| C 003 | 1 | 21-80342B10 | CAPACITOR | 1UF-20-50 |
| C 004 | 1 | 21-80342B10 | CAPACITOR | 1UF-20-50 |
| C 005 | 1 | 21-80342B10 | CAPACITOR | 1UF-20-50 |
| C 006 | 1 | 21-80342B10 | CAPACITOR | 1UF-20-50 |
| C 007 | 1 | 21-80342B10 | CAPACITOR | 1UF-20-50 |
| C 008 | 1 | 21-80342B10 | CAPACITOR | 1UF-20-50 |
| C 009 | 1 | 21-80342B10 | CAPACITOR | 1UF-20-50 |
| C 010 | 1 | 21-80342B10 | CAPACITOR | 1UF-20-50 |
| C 011 | 1 | 21-80342B10 | CAPACITOR | 1UF-20-50 |
| C 012 | 1 | 21-80342B10 | CAPACITOR | 1UF-20-50 |
| C 013 | 1 | 21-80342B10 | CAPACITOR | 1UF-20-50 |
| C 014 | 1 | 21-80342B10 | CAPACITOR | 1UF-20-50 |
| C 0155 | 1 | 21-80342B10 | CAPACITOR | 1UF-20-50 |
| C 016 | 1 | 21-80342B10 | CAPACITOR | 1UF-20-50 |
| C 017 | 1 | 21-80342B10 | CAPACITOR | 1UF-20-50 |
| C 018 | 1 | 21-80342B10 | CAPACITOR | 1UF-20-50 |
| C 019 | 1 | 21-80342B10 | CAPACITOR | 1UF-20-50 |
| C 020 | 1 | 21-80341B96 | CAPACITOR | 1UF-10-100 |
| C 021 | 1 | 21-80341B96 | CAPACITOR | 1UF-10-100 |
| C 022 | 1 | 21-80372B87 | CAPACITOR | 3900PF-5-50 |
| C 023 | 1 | 21-80372B87 | CAPACITOR | 3900-5-50 |
| C 024 | 1 | 21-80372B87 | CAPACITOR | 3900-5-50 |
| C 025 | 1 | 21-80341B83 | CAPACITOR | 4700PF-5-50 |
| C 026 | 1 | 23-80341B15 | CAPACITOR | 10UF-20-50 |
| C 027 | 1 | 21-80342B36 | CAPACITOR | 018UF-10-50 |
| C 028 | 1 | 23-80341B15 | CAPACITOR | 10UF-20-50 |
| C 029 | 1 | 23-80341B17 | CAPACITOR | 22UF-20-25 |
| C 030 | 1 | 23-80341B15 | CAPACITOR | 1 UF-20-50 |
| C 031 | 1 | 21-80342B10 | CAPACITOR | 1UF-20-50 |
| C 032 | 1 | 21-80370A24 | CAPACITOR | 2200PF-20-50 |
| C 033 | 1 | 21-80341B64 | CAPACITOR | 27PF-5-50 |
| C 034 | 1 | 21-80341B64 | CAPACITOR | 27PF-5-50 |
| C 035 | 1 | 21-80341B64 | CAPACITOR | 27PF-5-50 |
| C 036 | 1 | 21-80341B64 | CAPACITOR | 27PF-5-50 |
| C 037 | 1 | 21-80370A11 | CAPACITOR | 10PF-5-50 |
| C 038 | 1 | 21-80342B35 | CAPACITOR | 018UF-10-50 |
| C 039 | 1 | 21-80342B36 | CAPACITOR | 018UF-10-50 |
| C 040 | 1 | 21-80342B36 | CAPACITOR | 018UF-10-50 |
| C 041 | 1 | 21-80341B64 | CAPACITOR | 27PF-5-50 |
| C 042 | 1 | 21-80344B38 | CAPACITOR | 047UF-10-50 |
| C 043 | 1 | 21-80372B89 | CAPACITOR | 6.8UF-20-50 |
| C 044 | 1 | 21-80372B89 | CAPACITOR | 6.8UF-20-50 |
| C 045 | 1 | 21-80370A11 | CAPACITOR | 10PF-5-50 |
| C 046 | 1 | 21-80342B36 | CAPACITOR | 27PF-5-50 |
| C 047 | 1 | 21-80341B64 | CAPACITOR | 27PF-5-50 |
| C 048 | 1 | 21-80370A09 | CAPACITOR | 1.5PF-.5PF-50 |
| C 049 | 1 | 23-80341B15 | CAPACITOR | 10UF-20-50 |
| C 050 | 1 | 21-80341B64 | CAPACITOR | 27PF-5-50 |
| C 051 | 1 | 21-80342B36 | CAPACITOR | 018UF-10-50 |
| C 052 | 1 | 21-80342B36 | CAPACITOR | 018UF-10-50 |
| C 053 | 1 | 21-80341B15 | CAPACITOR | 10UF-20-50 |
| C 054 | 1 | 21-80341B15 | CAPACITOR | 10UF-20-50 |
| C 055 | 1 | 21-80341B64 | CAPACITOR | 27PF-5-50 |
| C 056 | 1 | 21-80341B64 | CAPACITOR | 27pF-5-50 |
| C 057 | 1 | 23-80341B15 | CAPACITOR | 10UF-20-50 |
| C 058 | 1 | 23-80341B15 | CAPACITOR | 10UF-20-50 |
| C 060 | 1 | 23-80341B15 | CAPACITOR | 10UF-20-50 |
| C 061 | 1 | 23-80341B15 | CAPACITOR | 10UF-20-50 |
| C 062 | 1 | 21-80342B10 | CAPACITOR | 1UF-20-50 |
| C 063 | 1 | 21-80342B10 | CAPACITOR | 1UF-20-50 |
| C 064 | 1 | 21-80342B10 | CAPACITOR | 1UF-20-50 |
| C 065 | 1 | 21-80342B02 | CAPACITOR | 033UF-10-100 |
| C 066 | 1 | 21-80341B96 | CAPACITOR | 1UF-10-100 |
| C 067 | 1 | 21-80342B10 | CAPACITOR | 1UF-20-50 |
| C 068 | 1 | 21-80342B10 | CAPACITOR | 1UF-20-50 |
| C 069 | 1 | 21-80342B10 | CAPACITOR | 1UF-20-50 |
| C 070 | 1 | 21-80342B10 | CAPACITOR | 1UF-20-50 |
| C 071 | 1 | 21-80342B10 | CAPACITOR | 1UF-20-50 |
| C 072 | 1 | 21-80342B10 | CAPACITOR | 1UF-20-50 |
| C 073 | 1 | 21-80342B10 | CAPACITOR | 1UF-20-50 |
| CR 001 | 1 | 48-84463K02 | DIODE | |
| CR 002 | 1 | 48-84463K02 | DIODE | |
| CR 003 | 1 | 48-84463K02 | DIODE | |
| CR 004 | 1 | 48-84463K02 | DIODE | |

| Find No. | Qty. Req. | Part No. | Nomenclature | Part Value |
|---|---|---|---|---|
| CR 005 | 1 | 48-84463K02 | DIODE | |
| CR 005 | 1 | 48-86743C01 | DIODE | |
| CR 006 | 1 | 48-86743C01 | DIODE | |
| CR 007 | 1 | 48-86743C01 | DIODE | |
| J 001 | 1 | 09-80344B23 | RF CONNECTOR | |
| K 001 | 1 | 80-80370A88 | RELAY, ELECTRONIC | |
| L 001 | 1 | 24-80369A37 | COIL | 100UH |
| Q 001 | 1 | 48-02089C01 | TRANSISTOR | |
| Q 002 | 1 | 48-02089C01 | TRANSISTOR | |
| R 001 | 1 | 06-11009C56 | RESISTOR | 5.1K-5-1/4 |
| R 002 | 1 | 06-11009C97 | RESISTOR | 100K-5-1/4 |
| R 003 | 1 | 06-00124A49 | RESISTOR | 1K-5-1/4 |
| R 004 | 1 | 06-11009C35 | RESISTOR | 270K-5-1/4 |
| R 005 | 1 | 06-10621B94 | RESISTOR | 1K-1-1/4 |
| R 006 | 1 | 06-10621B94 | RESISTOR | 1K-1-1/4 |
| R 007 | 1 | 06-11009001 | RESISTOR | 10-5-1/4 |
| R 008 | 1 | 06-00124A87 | RESISTOR | 39K-5-1/4 |
| R 009 | 1 | 06-11009C01 | RESISTOR | 10-5-1/4 |
| R 010 | 1 | 06-00124A87 | RESISTOR | 39K-5-1/4 |
| R 011 | 1 | 06-11009C77 | RESISTOR | 15K-5-1/4 |
| R 012 | 1 | 06-11009C82 | RESISTOR | 24K-5-1/4 |
| R 013 | 1 | 06-11009C79 | RESISTOR | 18K-5-1/4 |
| R 014 | 1 | 06-11009C76 | RESISTOR | 13K-5-1/4 |
| R 015 | 1 | 06-10621C39 | RESISTOR | 2.87K-1-1/4 |
| R 016 | 1 | 06-10621B61 | RESISTOR | 453-1-1/4 |
| R 017 | 1 | 06-10621D94 | RESISTOR | 115K-1-1/4 |
| R 018 | 1 | 06-11009C56 | RESISTOR | 2K-5-1/4 |
| R 019 | 1 | 06-11009D15 | RESISTOR | 510K-5-1/4 |
| R 020 | 1 | 06-11009C73 | RESISTOR | 10K-5-1/4 |
| R 021 | 1 | 06-00124A87 | RESISTOR | 39K-5-1/4 |
| R 022 | 1 | 06-10621D64 | RESISTOR | 56.2K-1-1/4 |
| R 023 | 1 | 06-10621D25 | RESISTOR | 22.1K-1-1/4 |
| R 024 | 1 | 06-11009C56 | RESISTOR | 2K-5-1/4 |
| R 025 | 1 | 06-11009C56 | RESISTOR | 2K-5-1/4 |
| R 026 | 1 | 06-11009C60 | RESISTOR | 3K-5-1/4 |
| R 027 | 1 | 06-10621D77 | RESISTOR | 76.8K-1-1/4 |
| R 028 | 1 | 06-11009C46 | RESISTOR | 750-5-1/4 |
| R 029 | 1 | 06-00124A49 | RESISTOR | 1K-5-1/4 |
| R 030 | 1 | 06-11009C29 | RESISTOR | 150-5-1/4 |
| R 031 | 1 | 06-11009C01 | RESISTOR | 10-5-1/4 |
| R 032 | 1 | 06-11009C09 | RESISTOR | 22-5-1/4 |
| R 033 | 1 | 06-11009C18 | RESISTOR | 47-5-1/4 |
| R 034 | 1 | 18-83452F15 | RESISTOR, VARIABLE 20K | |
| R 025 | 1 | 06-11009C97 | RESISTOR | 100K-5-1/4 |
| R 036 | 1 | 18-83452F15 | RESISTOR, VARIABLE 20K | |
| R 037 | 1 | 18-83452F13 | RESISTOR, VARIABLE 10K | |
| R 038 | 1 | 06-11009C73 | RESISTOR | 10K-5-1/4 |
| R 039 | 1 | 06-11009C67 | RESISTOR | 5.6K-5-1/4 |
| R 040 | 1 | 06-11009C67 | RESISTOR | 5.6K-5-1/4 |
| R 041 | 1 | 06-11009C67 | RESISTOR | 5.6K-5-1/4 |
| R 042 | 1 | 06-11009C01 | RESISTOR | 10-5-1/4 |
| R 043 | 1 | 06-11009C01 | RESISTOR | 10-5-1/4 |
| R 044 | 1 | 06-00124B55 | RESISTOR | 2.7-5-1/4 |
| R 045 | 1 | 06-11009C25 | RESISTOR | 100-5-1/4 |
| R 046 | 1 | 06-11009C22 | RESISTOR | 75-5-1/4 |
| R 047 | 1 | 06-11009C25 | RESISTOR | 100-5-1/4 |
| R 050 | 1 | 06-11009C01 | RESISTOR | 10-5-1/4 |
| R 051 | 1 | 06-10621D45 | RESISTOR | 35.7K-1-1/4 |
| TP001 | 1 | 09-80331A88 | JACK | WHITE |
| TP002 | 1 | 09-80331A88 | JACK | WHITE |
| TP003 | 1 | 09-80331A88 | JACK | WHITE |
| TP004 | 1 | 09-80331A88 | JACK | WHITE |
| TP004 | 1 | 09-80331A88 | JACK | WHITE |
| TP005 | 1 | 09-80331A88 | JACK | WHITE |
| TP006 | 1 | 09-80331A88 | JACK | WHITE |
| U 001 | 1 | 51-80372B98 | INTEGRATED CIRCUIT | |
| U 002 | 1 | 51-82609M56 | INTEGRATED CIRCUIT | |
| U 003 | 1 | 51-82609M56 | INTEGRATED CIRCUIT | |
| U 004 | 1 | 51-82609M57 | INTEGRATED CIRCUIT | |
| U 005 | 1 | 51-80339B86 | INTEGRATED CIRCUIT | |
| U 006 | 1 | 51-84561L41 | INTEGRATED CIRCUIT | |
| U 007 | 1 | 48-80372B93 | INTEGRATED CIRCUIT | |
| U 008 | 1 | 51-80370A83 | INTEGRATED CIRCUIT | |
| U 009 | 1 | 51-802807K20 | INTEGRATED CIRCUIT | |
| U 010 | 1 | 80-80372B91 | COMMUNICATION CONTROLLER | |
| U 011 | 1 | 51-05467G07 | INTEGRATED CIRCUIT | |
| U 013 | 1 | 51-82848M44 | INTEGRATED CIRCUIT | |
| U 014 | 1 | 51-82609M68 | INTEGRATED CIRCUIT | |
| U 015 | 1 | 51-84561L03 | INTEGRATED CIRCUIT | |
| U 016 | 1 | 51-84561L36 | INTEGRATED CIRCUIT | |
| U 017 | 1 | 51-82609M68 | INTEGRATED CIRCUIT | |
| U 018 | 1 | 51-80372B99 | INTEGRATED CIRCUIT | |
| U 019 | 1 | 51-80345A10 | INTEGRATED CIRCUIT | |
| U 020 | 1 | 51-80370A86 | INTEGRATED CIRCUIT | |
| U 021 | 1 | 51-80345A04 | INTEGRATED CIRCUIT | CA3240E SCREENED |
| U 022 | 1 | 51-80345A04 | INTEGRATED CIRCUIT | CA3240E SCREENED |
| U 023 | 1 | 51-80345A05 | INTEGRATED CIRCUIT | HI-201-5 SCREENED |
| U 024 | 1 | 51-80370A78 | INTEGRATED CIRCUIT | |
| U 025 | 1 | 51-05706L99 | VCO | |
| U 026 | 1 | 51-05706L76 | RF FREQUENCY MULT. | |
| U 027 | 1 | KVN1123AA | REFERENCE OSCILLATOR | 12.8 MHz |
| U 028 | 1 | 51-05706L90 | SYNTHESIZER MODULE | |
| U 029 | 1 | 51-05706L87 | VOLTAGE REGULATOR | |
| U 030 | 1 | 51-05467G01 | INTEGRATED CIRCUIT | |
| U 031 | 1 | 51-80345A04 | INTEGRATED CIRCUIT | CA3240E SCREENED |
| VR001 | 1 | 48-80342B16 | DIODE | |

# DC/RF ALIGNMENT METER

MODEL TEK-7A AND TEK-7B

# AND DC/RF EXTERNAL METER PROBE

MODEL TEKA-39 AND TEKA-39A

FAEPS-24267-O
(J386)

## 1. DESCRIPTION

The Models TEK-7A and TEK-7B DC/RF Alignment Meter are used to align and check transmitters and receivers in the 25-174 MHz frequency range.

The alignment meter consists of 0-50 uA meter, a plug-in dc rf probe, and two front panel mounted switches. The dc rf probe is available separately as a replacement item; order Model TEK-39A.

## 2. ACCESSORY CABLE

Accessory cable 1V855413 is available on separate order. This cable is supplied with Motorola Model S1056A/B-S1059A/B and TU546 Series Portable Test Sets. Use this cable with the P-7208 Series Dummy Load to indicate transmitter rf power output and when metering Motorola transmitters and receivers having a phone jack metering receptacle.

## 3. OPERATORS ITEMS

METER REVERSE SWITCH - Reverses the polarity of the meter for an on-scale reading when the needle goes in the negative direction past zero.

RANGE-SELECTOR SWITCH - Rotary switch for selecting RF ranges: .5 V, 1 V, 5 V or 15 V; DC ranges: .1 V, 1 V, 5 V, 15 V or 100 V; or 200 V EXT METER.

DC-RF PROBE SWITCH - Selects dc or rf operation by a slide switch on the housing of the probe.

## 4. OPERATING INSTRUCTIONS

### 4.1 RF FIELD INTENSITY INDICATOR FOR LOW POWER EQUIPMENT

Step 1. Insert the phone plug of the dc/rf probe into the PROBE/EXT METER receptacle.

Step 2. Place the slide switch on the dc/rf probe to the RF position.

Step 3. Locate the probe near the antenna of the unit under test.

Step 4. Adjust the sensitivity of the meter by the proximity of the probe to the antenna or by the range switch selection.

Step 5. Note the needle swing on the meter and select the proper switch positions for an on-scale reading.

MOTOROLA INC.
Communications Division

service publications
1301 E. Algonquin Road, Schaumburg, IL 60196

Copyright 1977 by Motorola, Inc.
Printed in U.S.A.



68P81103A68-G
4/29/77-sk

www.manualsplus.com
1031520